STANDARD CONSTRUCTION DETAILS

WATER

AUGUST 2010

Addison!®

PUBLIC WORKS DEPARTMENT

TABLE OF CONTENTS

WATER

PVC WATER MAIN EMBEDMENT	SD-W01
RCCP WATER MAIN	SD-W02
CASING	SD-W03
HORIZONTAL THRUST BLOCK AT PIPE BEND	SD-W04
HORIZONTAL THRUST BLOCK DIMENSIONS & QUANTITIES	SD-W05
HORIZONTAL THRUST BLOCK DIMENSIONS & QUANTITIES	SD-W06
HORIZONTAL THRUST BLOCK AT TEES & PLUGS	SD-W07
VERTICAL THRUST BLOCK AT PIPE BEND	SD-W08
VALVE SETTING BOX	SD-W09
VALVE BOX WITH EXTENSION	SD-W10
VALVE EXTENSION	SD-W11
DEBRIS CAP	SD-W12
BUTTERFLY VALVE WITH MANHOLE INSTALLATION	SD-W13
BUTTERFLY VALVE WITH MANHOLE INSTALLATION	SD-W14
2" BLOW OFF WITH METER BOX	SD-W15
TYPICAL FIRE HYDRANT INSTALLATION	SD-W16
TYPICAL FIRE HYDRANT INSTALLATION	SD-W17
FIRE HYDRANT GUARD POST	SD-W18
FIRE HYDRANT REFLECTOR INSTALLATION	SD-W19
SERVICE CONNECTION WITH METER BOX	SD-W20
RESERVED	SD-W21
RESERVED	SD-W22

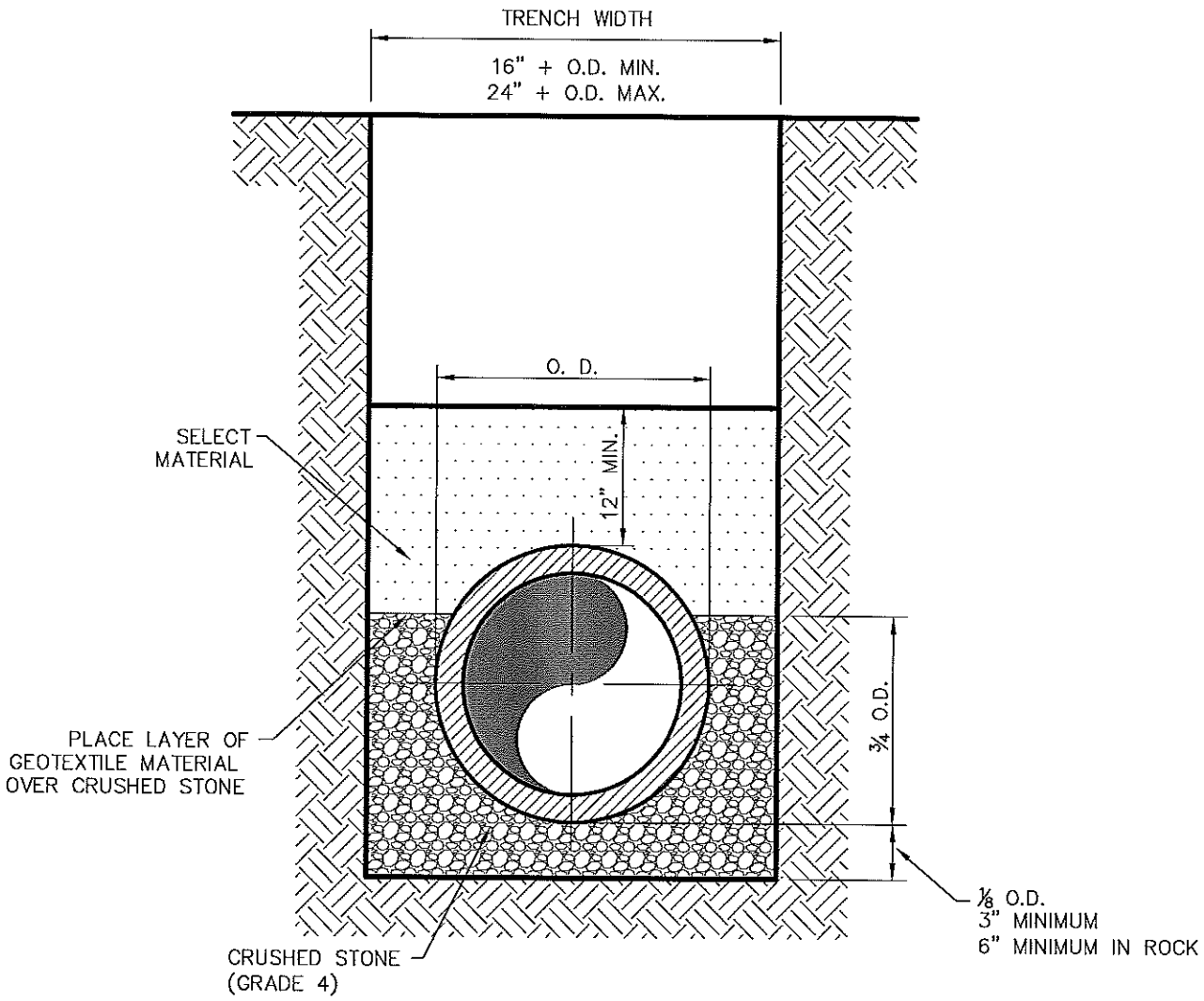

CLASS "B+" EMBEDMENT

CRUSHED STONE SHALL BE 3/4", PASSING # 4 SIEVE

TYPICAL P.V.C. WATER MAIN
EMBEDMENT

Addison! PUBLIC WORKS DEPARTMENT	P.V.C. WATER MAIN EMBEDMENT	STANDARD CONSTRUCTION DETAILS WATER		
		DATE: AUGUST, 2010	REV DATE: –	SHEET : SD–W01

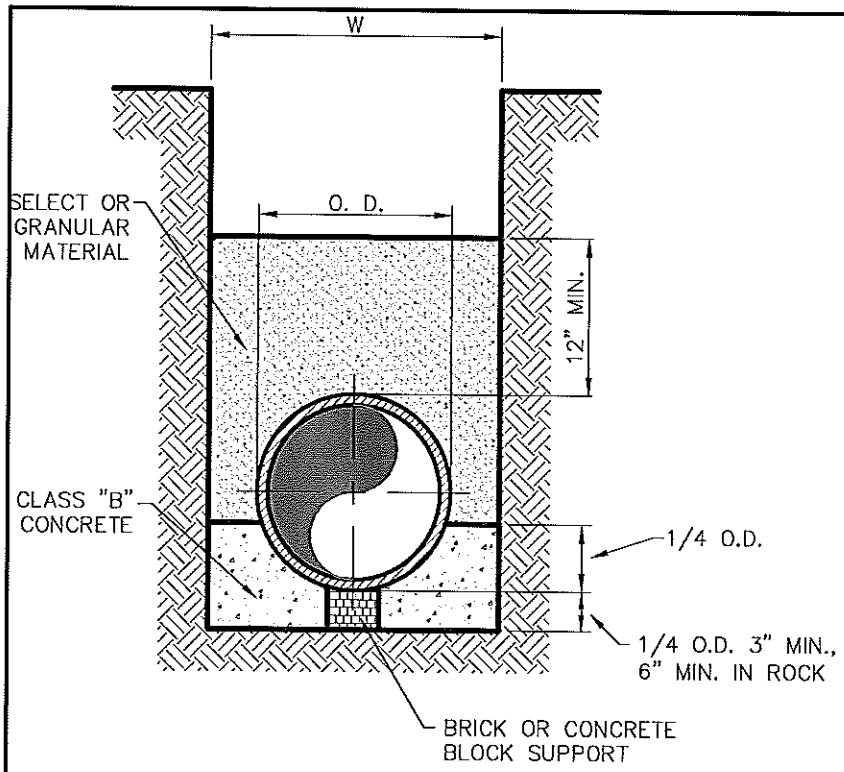

CONCRETE CRADLE
CLASS "A" EMBEDMENT

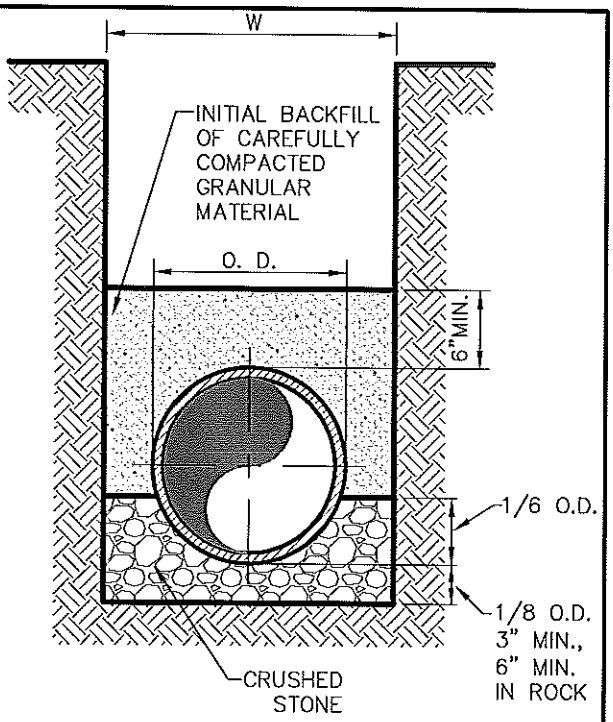

CLASS "C" EMBEDMENT

W = 16" + O.D. MIN.
24" + O.D. MAX.

TABLE OF QUANTITIES OF MATERIAL IN CUBIC YARDS PER 100 LINEAR FEET

INSIDE DIAMETER OF PIPE	OUTSIDE DIAMETER OF PIPE	TRENCH WIDTH IN IN.	TRENCH WIDTH IN FEET	CONCRETE CLASS "A" EMBED.	CONCRETE CLASS "G" EMBED.	CRUSHED STONE CLASS "C" EMBED.
REINFORCED CONCRETE CYLINDER PIPE						
14"	17.25"	34"	2.83	6.37	10.59	4.48
16"	19.38"	36"	3.00	7.49	12.26	4.94
18"	21.78"	38"	3.17	8.77	14.33	5.43
20"	23.78"	40"	3.33	10.00	16.14	5.91
24"	27.75"	44"	3.67	12.66	20.02	7.46

NOTE :
ALL COMPACTION SHALL BE IN ACCORDANCE WITH STANDARD SPECIFICATIONS AND / OR SPECIAL PROVISIONS.

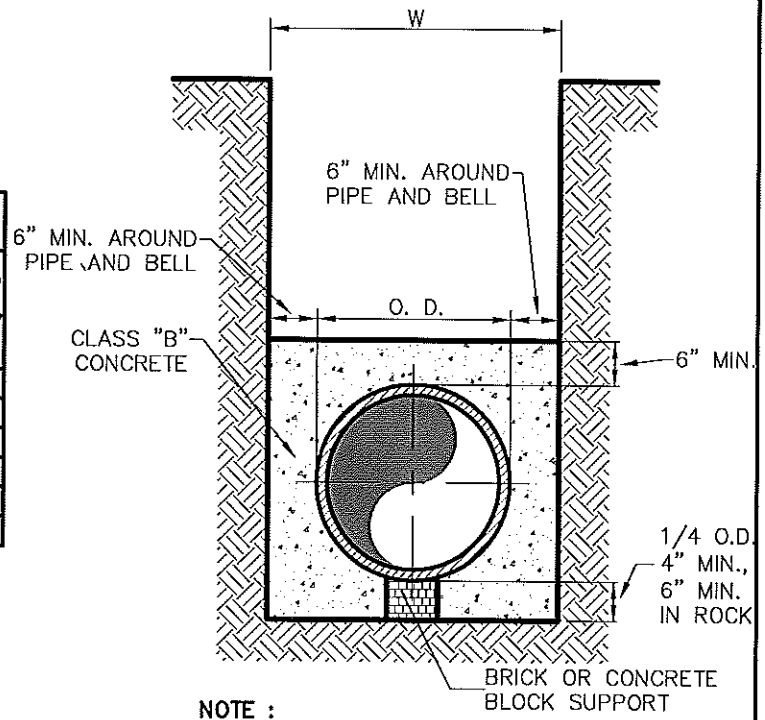

NOTE :
CONCRETE ENCASEMENT SHALL BEGIN AND END 6 INCHES FROM THE END OF JOINT

CLASS "G" EMBEDMENT

Addison! PUBLIC WORKS DEPARTMENT	RCCP WATER MAIN EMBEDMENT	STANDARD CONSTRUCTION DETAILS WATER		
		DATE: AUGUST, 2010	REV DATE: –	SHEET : SD-W02

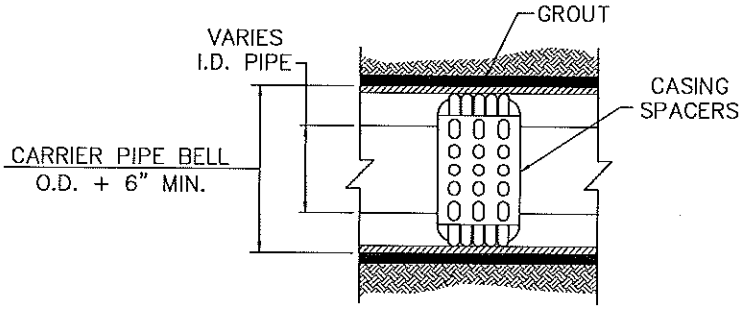

TYPICAL CASING SECTION

CARRIER PIPE SIZE (IN)	STEEL ENCASEMENT O.D. (IN)	STEEL ENCASEMENT WALL THICKNESS (IN)
6	14	1/4
8	18	1/4
12	21	1/4
18	27	3/8
21	30	3/8
24	36	3/8
27	39	1/2

FOR ALL CARRIER PIPES OVER 27": THE STEEL ENCASEMENT PIPE SHALL BE 12" LARGER THAN THE CARRIER PIPE AND THE STEEL ENCASEMENT WALL THICKNESS SHALL BE 1/2".

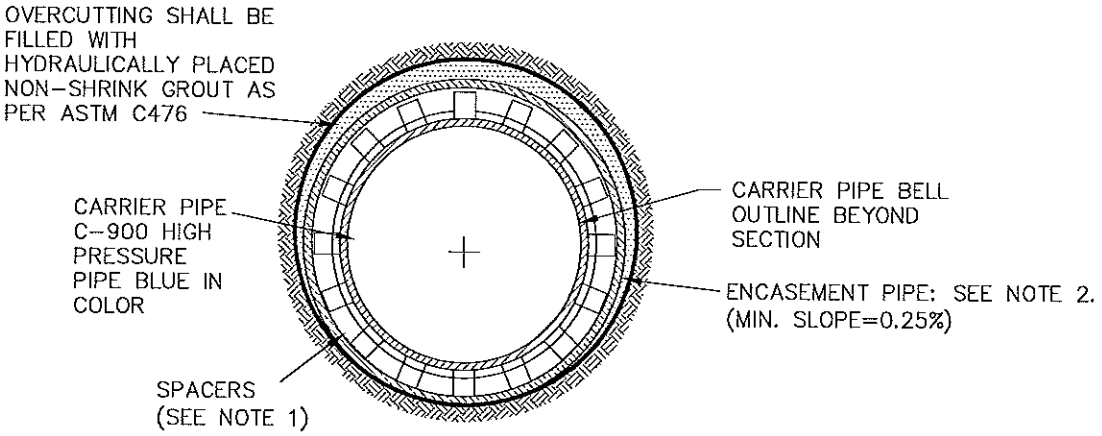

WATER MAIN ENCASEMENT

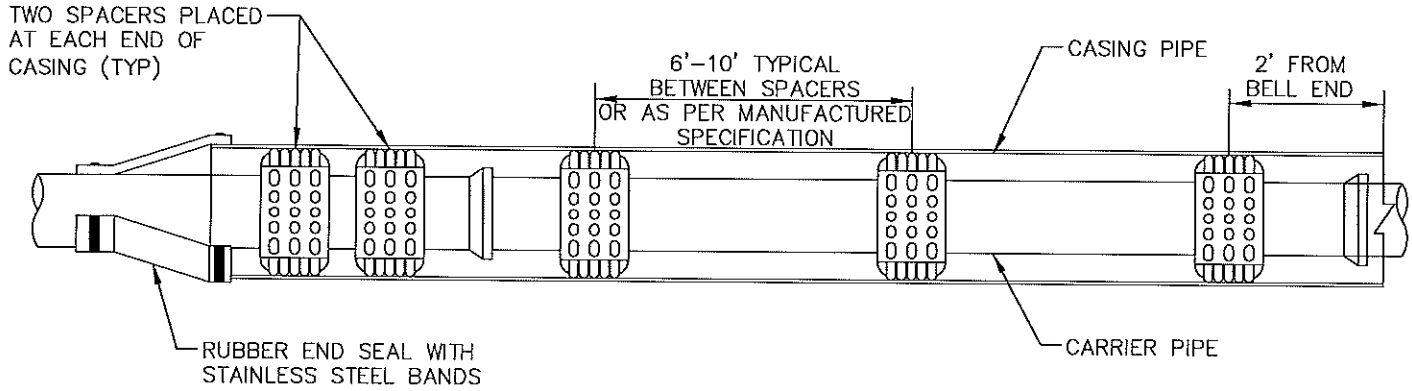

INSULATOR SPACING DETAIL

NOTES:

1. HIGH DENSITY POLYETHYLENE SPACERS, RACI OR EQUAL, SHALL BE USED. WHERE NO CASING PIPE IS REQUIRED OVERCUTTING AROUND UTILITY SHALL BE FILLED WITH HYDRAULICALLY PLACED NON-SHRINK GROUT AS PER ASTM C476.

2. ENCASEMENT PIPE SHALL BE HIGH DENSITY STEEL PIPE. ALL JOINTS TO BE WELDED 100%.

Addison! DEPARTMENT OF PUBLIC WORKS	CASING	STANDARD CONSTRUCTION DETAILS WATER		
		DATE: AUGUST, 2010	REV DATE: –	SHEET : SD-W03

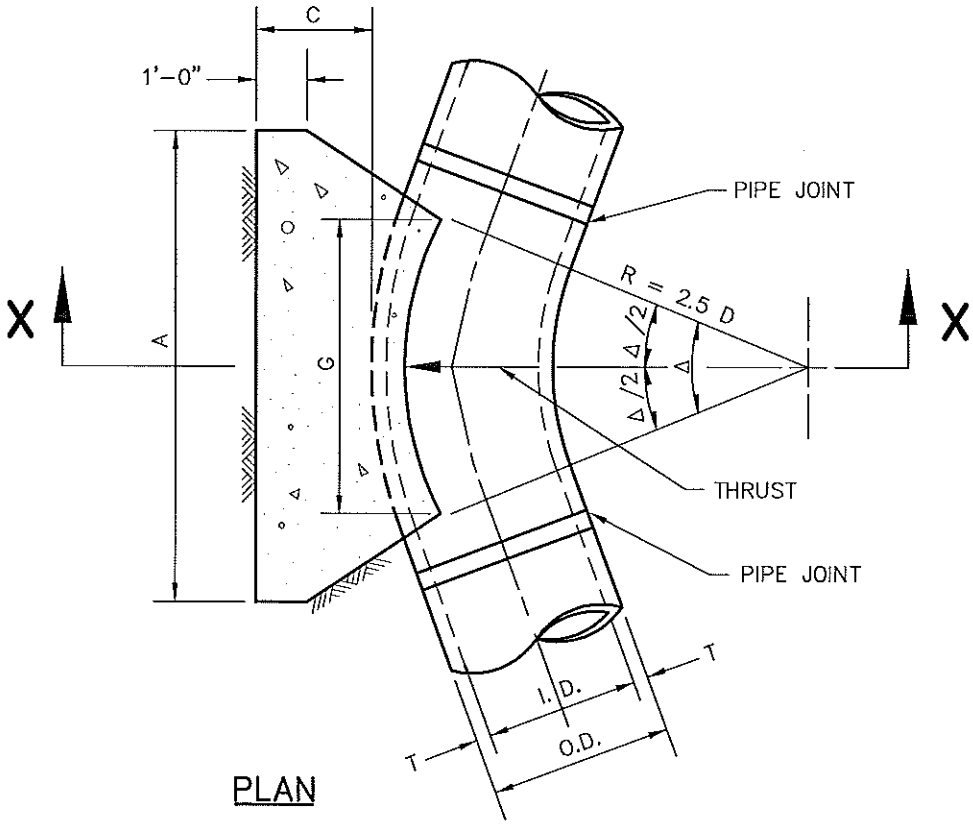

PLAN

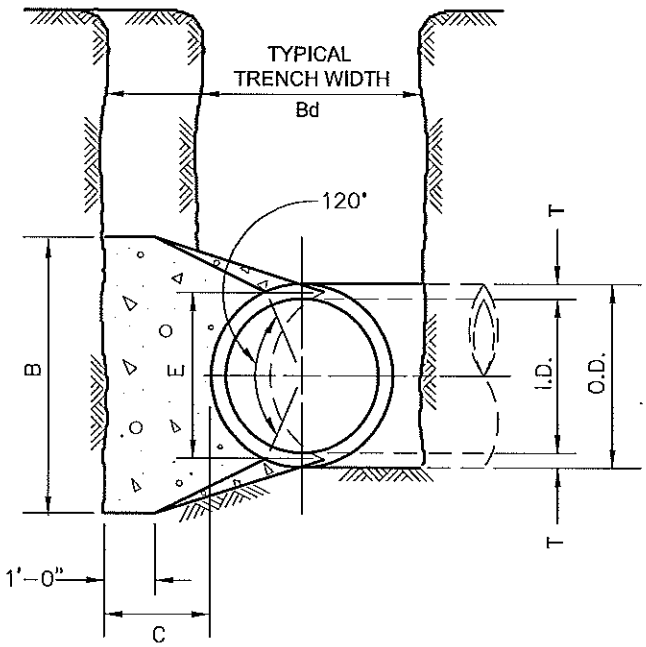

SECTION X–X

Addison! PUBLIC WORKS DEPARTMENT	HORIZONTAL THRUST BLOCK AT PIPE BEND	STANDARD CONSTRUCTION DETAILS WATER		
		DATE: AUGUST, 2010	REV DATE: –	SHEET : SD–W04

I.D. (IN.)	T (IN.)	Δ = 11.25° (FT.)	Δ ≥ 22.50° (FT.)	E (FT.)
4,6,8	0.4	1.5	1.5	0.9
10,12	0.5	1.5	1.5	1.2
16,18	0.6	1.5	1.5	1.6
20	0.7	1.5	1.5	1.8
24	0.9	1.5	1.5	2.1
30	2.9	1.5	1.9	2.6
36	4.5	1.5	2.3	3.3
42	5.0	1.8	2.6	3.8
48	5.5	2.0	3.0	4.3
54	6.0	2.3	3.4	4.8
60	6.5	2.5	3.8	5.3
66	6.8	2.8	4.1	5.7
72	7.5	3.0	4.5	6.3
78	7.5	3.3	4.9	6.7
84	8.0	3.5	5.3	7.2
90	8.5	3.8	5.6	7.7
96	9.0	4.0	6.0	8.2

I.D. (IN.)	Δ = 11.25°								I.D. (IN.)	Δ = 22.50°							
	G (FT.)	THRUST (TONS)	EARTH			ROCK				G (FT.)	THRUST (TONS)	EARTH			ROCK		
			A (FT.)	B (FT.)	VOL. (C.Y.)	A (FT.)	B (FT.)	VOL. (C.Y.)				A (FT.)	B (FT.)	VOL. (C.Y.)	A (FT.)	B (FT.)	VOL. (C.Y.)
4,6,8	0.4	1.0	1.0	1.5	0.1	1.0	1.0	0.1	4,6,8	0.8	2.0	1.5	1.5	0.1	1.0	1.0	0.1
10,12	0.6	2.2	1.5	1.5	0.1	1.0	1.5	0.1	10,12	1.1	4.4	2.0	2.5	0.3	1.5	1.5	0.1
16,18	0.8	5.0	2.0	2.5	0.3	1.5	2.0	0.2	16,18	1.6	9.9	3.0	3.5	0.6	2.0	2.5	0.3
20	0.9	6.2	2.0	3.5	0.4	1.5	3.0	0.3	20	1.8	12.3	3.5	3.5	0.7	2.0	3.0	0.4
24	1.1	8.9	3.0	3.5	0.5	1.5	3.0	0.3	24	2.2	17.7	4.0	4.5	1.0	3.0	3.5	0.5
30	1.4	10.4	3.0	3.5	0.6	2.0	3.5	0.4	30	2.7	20.7	5.0	4.5	1.5	3.0	4.0	0.8
36	1.7	15.0	3.5	4.5	0.9	2.0	4.0	0.5	36	3.3	29.8	5.5	5.5	2.3	4.0	4.0	1.3
42	1.9	20.4	4.5	5.0	1.5	2.5	5.0	0.8	42	3.8	40.5	7.0	6.0	3.9	4.5	5.0	2.1
48	2.2	26.6	4.5	6.0	2.0	2.5	6.0	1.1	48	4.4	52.9	8.0	7.0	5.7	4.5	6.0	2.8
54	2.5	33.7	6.0	6.0	3.0	3.0	6.0	1.4	54	4.9	67.0	9.0	8.0	8.0	6.0	6.0	4.1
60	2.7	41.6	6.0	7.0	3.8	3.0	7.0	1.8	60	5.5	82.7	9.5	9.0	10.6	6.0	7.0	5.3
66	3.0	50.3	6.5	8.0	5.1	3.5	8.0	2.7	66	6.0	100.1	10.5	10.0	14.1	6.5	8.0	7.2
72	3.3	59.9	7.5	8.0	6.3	4.0	8.0	3.3	72	6.6	119.1	11.0	11.0	17.6	7.5	8.0	9.1
78	3.6	70.2	8.0	9.0	8.1	4.0	9.0	3.9	78	7.1	139.8	12.0	12.0	22.5	8.0	9.0	11.7
84	3.8	81.5	8.5	10.0	10.3	4.5	10.0	5.3	84	7.6	162.1	13.0	12.5	27.2	8.5	10.0	14.8
90	4.1	93.5	9.5	10.0	12.2	5.0	10.0	6.3	90	8.2	186.1	14.0	13.5	33.7	9.5	10.0	17.7
96	4.4	106.4	10.0	11.0	15.0	5.0	11.0	7.4	96	8.7	211.7	15.0	14.5	41.2	10.0	11.0	21.8

TABLES OF DIMENSIONS AND QUANTITIES

Addison!

PUBLIC WORKS DEPARTMENT

HORIZONTAL THRUST BLOCK DIMENSIONS & QUANTITIES

STANDARD CONSTRUCTION DETAILS
WATER

DATE: AUGUST, 2010	REV DATE: –	SHEET : SD-W05

I.D. (IN.)	Δ = 30°								I.D. (IN.)	Δ = 45°							
	G (FT.)	THRUST (TONS)	EARTH			ROCK				G (FT.)	THRUST (TONS)	EARTH			ROCK		
			A (FT.)	B (FT.)	VOL. (C.Y.)	A (FT.)	B (FT.)	VOL. (C.Y.)				A (FT.)	B (FT.)	VOL. (C.Y.)	A (FT.)	B (FT.)	VOL. (C.Y.)
4,6,8	1.0	2.6	2.0	1.5	0.2	1.0	1.5	0.1	4,6,8	1.5	3.9	2.0	2.0	0.2	1.5	1.5	0.1
10,12	1.5	5.9	2.5	2.5	0.3	2.0	1.5	0.2	10,12	2.2	8.7	3.5	2.5	0.5	2.0	2.5	0.3
16,18	2.2	13.2	3.5	4.0	0.8	2.5	3.0	0.4	16,18	3.2	19.5	4.5	4.5	1.2	3.0	3.5	0.6
20	2.4	16.3	4.5	4.0	1.0	3.0	3.0	0.5	20	3.6	24.1	5.5	4.5	1.5	3.5	3.5	0.7
24	2.9	23.4	6.0	4.0	1.4	3.5	3.5	0.7	24	4.3	34.6	8.0	4.5	2.3	4.5	4.0	1.1
30	3.6	27.5	6.5	5.0	1.9	3.5	4.0	0.9	30	5.4	40.6	8.5	5.0	3.2	5.5	4.0	1.6
36	4.4	39.5	7.0	6.0	3.4	4.5	4.5	1.6	36	6.5	58.5	10.0	6.0	5.3	6.5	4.5	2.6
42	5.1	53.8	8.0	7.0	5.1	5.5	5.0	2.5	42	7.5	79.6	11.5	7.0	8.1	8.0	5.0	4.2
48	5.8	70.3	9.0	8.0	7.4	6.0	6.0	3.7	48	8.6	104.0	13.0	8.0	11.9	9.0	6.0	6.3
54	6.5	89.0	10.0	9.0	10.3	7.0	6.5	5.3	54	9.7	131.5	15.0	9.0	17.1	10.5	6.5	8.9
60	7.3	110.0	11.0	10.0	13.9	7.5	7.5	7.3	60	10.7	162.4	16.5	10.0	23.1	11.0	7.5	12.0
66	8.0	132.9	12.5	11.0	18.9	8.5	8.0	9.6	66	11.8	196.5	18.0	11.0	30.1	12.0	8.5	16.2
72	8.7	158.2	13.5	12.0	24.0	9.0	9.0	12.3	72	12.9	233.9	19.5	12.0	38.6	14.0	8.5	20.7
78	9.4	185.6	14.5	13.0	30.0	10.0	9.5	15.6	78	13.9	274.5	21.5	13.0	49.8	14.5	9.5	25.9
84	10.1	215.3	15.5	14.0	37.1	10.5	10.5	19.5	84	15.0	318.4	23.0	14.0	61.2	15.5	10.5	32.6
90	10.9	247.1	16.5	15.0	45.0	11.5	11.0	23.9	90	16.1	365.5	24.5	15.0	74.5	17.5	10.5	39.6
96	11.6	281.2	18.0	16.0	55.5	12.5	11.5	28.9	96	17.1	415.6	26.0	16.0	89.5	18.5	11.5	48.5

I.D. (IN.)	Δ = 67.50°								I.D. (IN.)	Δ = 90°							
	G (FT.)	THRUST (TONS)	EARTH			ROCK				G (FT.)	THRUST (TONS)	EARTH			ROCK		
			A (FT.)	B (FT.)	VOL. (C.Y.)	A (FT.)	B (FT.)	VOL. (C.Y.)				A (FT.)	B (FT.)	VOL. (C.Y.)	A (FT.)	B (FT.)	VOL. (C.Y.)
4,6,8	2.1	5.6	3.0	2.0	0.3	2.0	1.5	0.2	4,6,8	2.7	7.1	5.0	1.5	0.4	2.0	2.0	0.2
10,12	3.1	12.6	5.5	2.5	0.8	3.5	2.0	0.4	10,12	4.0	16.0	6.5	2.5	1.0	3.5	2.5	0.5
16,18	4.7	28.3	7.5	4.0	1.9	5.5	3.0	0.9	16,18	6.0	36.0	9.0	4.0	2.4	4.5	4.0	1.0
20	5.2	34.9	9.0	4.0	2.3	5.5	3.5	1.2	20	6.6	44.4	10.0	4.5	3.1	6.0	4.0	1.5
24	6.2	50.3	11.5	4.5	3.5	6.5	4.0	1.6	24	7.9	64.0	14.5	4.5	5.0	8.0	4.0	2.1
30	7.8	58.9	12.0	5.0	4.8	7.5	4.0	2.2	30	9.9	75.0	15.0	5.0	6.7	10.0	4.0	3.3
36	9.4	84.9	14.5	6.0	8.2	9.5	4.5	3.8	36	11.9	108.0	18.0	6.0	11.4	12.0	4.5	5.3
42	10.9	115.5	17.0	7.0	12.8	11.0	5.5	6.3	42	13.9	147.0	21.0	7.0	17.8	14.0	5.5	8.7
48	12.5	150.9	19.0	8.0	18.4	13.0	6.0	9.2	48	15.9	192.0	24.0	8.0	26.2	16.0	6.0	12.4
54	14.0	191.0	21.5	9.0	26.0	15.0	6.5	12.9	54	17.9	243.0	27.0	9.0	36.9	18.0	7.0	18.1
60	15.6	235.8	24.0	10.0	35.6	16.0	7.5	17.6	60	19.9	299.8	30.0	10.0	50.3	20.0	7.5	24.0
66	17.1	285.3	26.0	11.0	46.0	18.0	8.0	23.0	66	21.8	362.8	33.0	11.0	66.2	22.0	8.5	32.5
72	18.7	339.5	28.5	12.0	57.8	19.0	9.0	28.4	72	23.8	431.8	36.0	12.0	85.6	24.0	9.0	41.0
78	20.2	398.5	31.0	13.0	75.7	21.0	9.5	37.4	78	25.7	506.7	39.0	13.0	108.2	26.0	10.0	53.2
84	21.8	462.1	33.5	14.0	94.7	22.0	10.5	46.5	84	27.7	587.7	42.0	14.0	134.4	28.0	10.5	64.8
90	23.3	530.5	35.5	15.0	114.4	24.5	11.0	58.2	90	29.0	674.6	45.0	15.0	164.9	30.0	11.5	81.2
96	24.9	603.6	38.0	16.0	138.9	25.5	12.0	70.0	96	31.6	767.5	48.0	16.0	199.0	32.0	12.0	95.1

TABLES OF DIMENSIONS AND QUANTITIES

Addison! PUBLIC WORKS DEPARTMENT	HORIZONTAL THRUST BLOCK DIMENSIONS & QUANTITIES	STANDARD CONSTRUCTION DETAILS WATER		
		DATE: AUGUST, 2010	REV DATE: –	SHEET : SD–W06

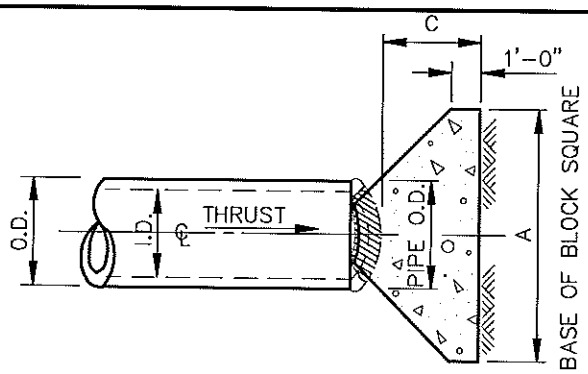

PLAN OF PLUG THRUST BLOCK

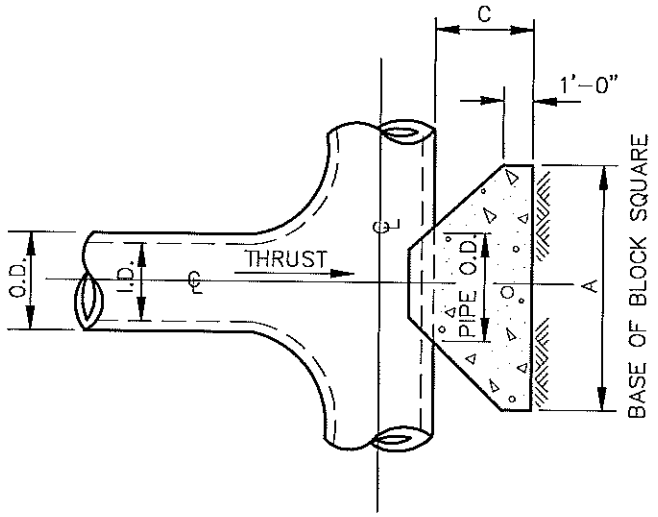

PLAN OF TEE THRUST BLOCK

			EARTH		ROCK	
I.D. (IN.)	THRUST (TONS)	C (FT.)	A (FT.)	VOL. (C.Y.)	A (FT.)	VOL. (C.Y.)
4,6,8	5.1	1.5	2.5	0.3	2.0	0.2
10,12	11.3	1.5	3.5	0.6	2.5	0.3
16,18	25.5	2.0	5.5	1.6	4.0	0.9
20	31.5	2.0	6.0	1.9	4.0	0.9
24	45.2	2.5	7.0	3.1	5.0	1.7
30	53.0	3.0	7.5	4.1	5.5	2.4
36	76.3	4.0	9.0	7.3	6.5	4.2
42	104.0	4.5	10.5	11.0	7.5	6.2
48	136.0	5.0	12.0	15.6	8.5	8.7

			EARTH		ROCK	
I.D. (IN.)	THRUST (TONS)	C (FT.)	A (FT.)	VOL. (C.Y.)	A (FT.)	VOL. (C.Y.)
54	172.0	5.5	13.5	21.4	9.5	11.9
60	212.0	6.0	15.0	28.4	10.5	15.7
66	257.0	6.5	16.5	36.8	11.5	20.5
72	305.0	7.5	17.5	47.2	12.5	27.2
78	358.0	8.0	19.0	58.9	13.5	33.7
84	416.0	8.5	20.5	72.3	14.5	41.2
90	477.0	9.0	22.0	87.7	15.5	49.7
96	543.0	9.5	23.5	104.8	16.5	61.0

TABLES OF DIMENSIONS AND QUANTITIES

Addison!

PUBLIC WORKS DEPARTMENT

HORIZONTAL THRUST BLOCK AT TEES & PLUGS

STANDARD CONSTRUCTION DETAILS
WATER

DATE: AUGUST, 2010	REV DATE: –	SHEET : SD-W07

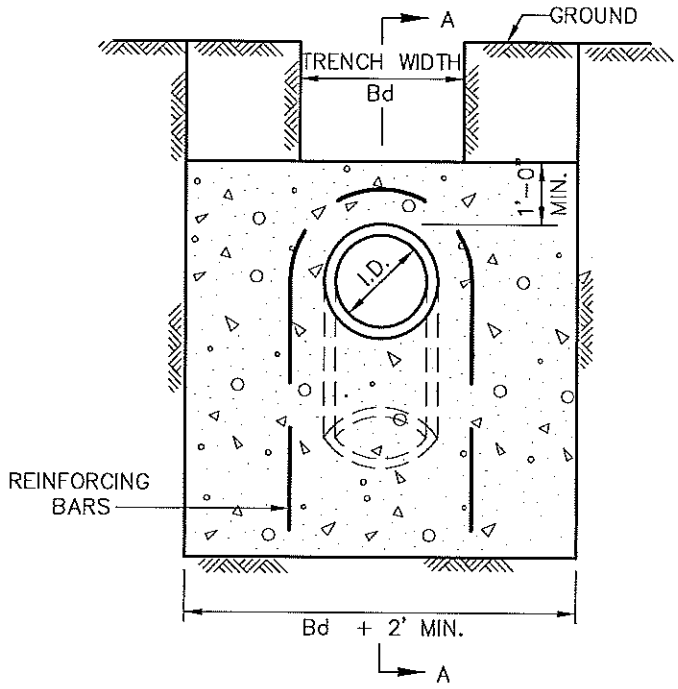

ELEVATION "B-B"

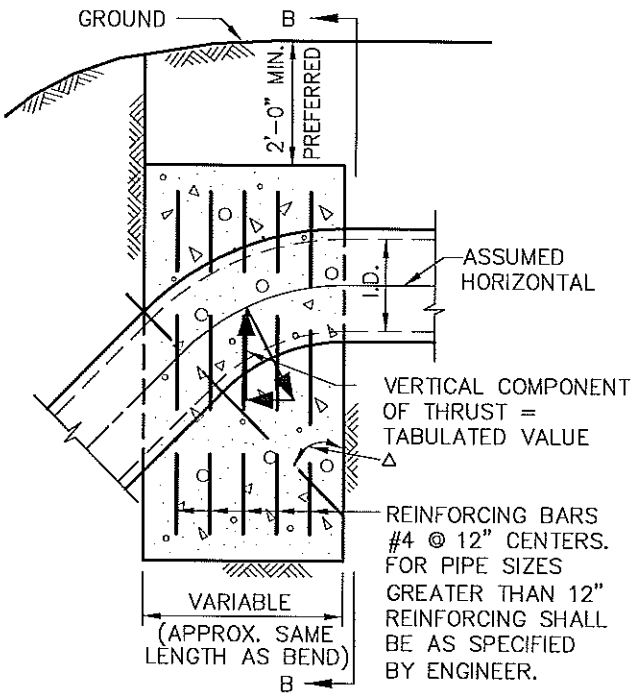

SECTION "A-A"

Δ →	11.25°		22.50°		30°		45°		67.50°		90°		← Δ
I.D. (IN.)	THRUST (TONS)	VOL. (C.Y.)	THRUST (TONS)	VOL. (C.Y.)	THRUST (TONS)	VOL. (C.Y.)	THRUST (TONS)	VOL. (C.Y.)	THRUST (TONS)	VOL. (C.Y.)	THRUST (TONS)	VOL. (C.Y.)	I.D. (IN.)
4,6,8	1.0	0.5	2.0	1.0	2.5	1.3	3.6	1.8	4.6	2.3	5.0	2.5	4,6,8
10,12	2.2	1.1	4.3	2.2	5.7	2.8	8.0	4.0	10.5	5.2	11.3	5.7	10,12
16,18	5.0	2.5	9.7	4.9	12.7	6.4	18.0	9.0	23.5	11.8	25.5	12.7	16,18
20	6.1	3.1	12.0	6.0	15.7	7.9	22.2	11.1	29.2	14.5	31.4	15.7	20
24	8.2	4.4	17.3	8.7	22.6	11.3	32.0	16.0	41.8	20.9	45.2	22.6	24
30	10.5	5.2	20.3	10.1	26.5	13.3	37.5	18.8	49.0	24.5	53.1	26.5	30
36	14.9	7.5	29.2	14.6	38.2	19.1	54.0	27.0	70.5	35.3	76.4	38.2	36
42	20.3	10.1	39.8	19.9	52.0	26.0	73.5	36.7	96.0	48.0	104.0	52.0	42
48	26.5	13.2	51.9	26.0	67.9	33.9	96.0	48.0	126.0	62.7	136.0	67.9	48
54	33.5	16.8	65.7	32.9	85.9	42.9	122.0	60.7	159.0	79.4	172.0	85.9	54
60	41.4	20.7	81.2	40.6	106.0	53.0	150.0	75.0	196.0	98.0	212.0	106.0	60
66	50.1	25.0	98.2	49.1	128.0	64.2	182.0	90.7	237.0	119.0	257.0	128.0	66
72	59.6	29.8	117.0	58.4	153.0	76.3	216.0	108.0	282.0	141.0	305.0	153.0	72
78	69.9	35.0	137.0	68.6	179.0	90.0	254.0	127.0	331.0	166.0	358.0	179.0	78
84	81.1	40.5	159.0	79.5	208.0	104.0	294.0	147.0	384.0	192.0	416.0	208.0	84
90	93.1	46.5	183.0	91.3	239.0	119.0	337.0	169.0	441.0	221.0	477.0	239.0	90
96	106.0	53.0	208.0	104.0	272.0	136.0	384.0	192.0	502.0	251.0	543.0	272.0	96

VERTICAL THRUST BLOCK

Addison! PUBLIC WORKS DEPARTMENT	VERTICAL THRUST BLOCK AT PIPE BEND	STANDARD CONSTRUCTION DETAILS WATER		
		DATE: AUGUST, 2010	REV DATE: –	SHEET : SD-W08

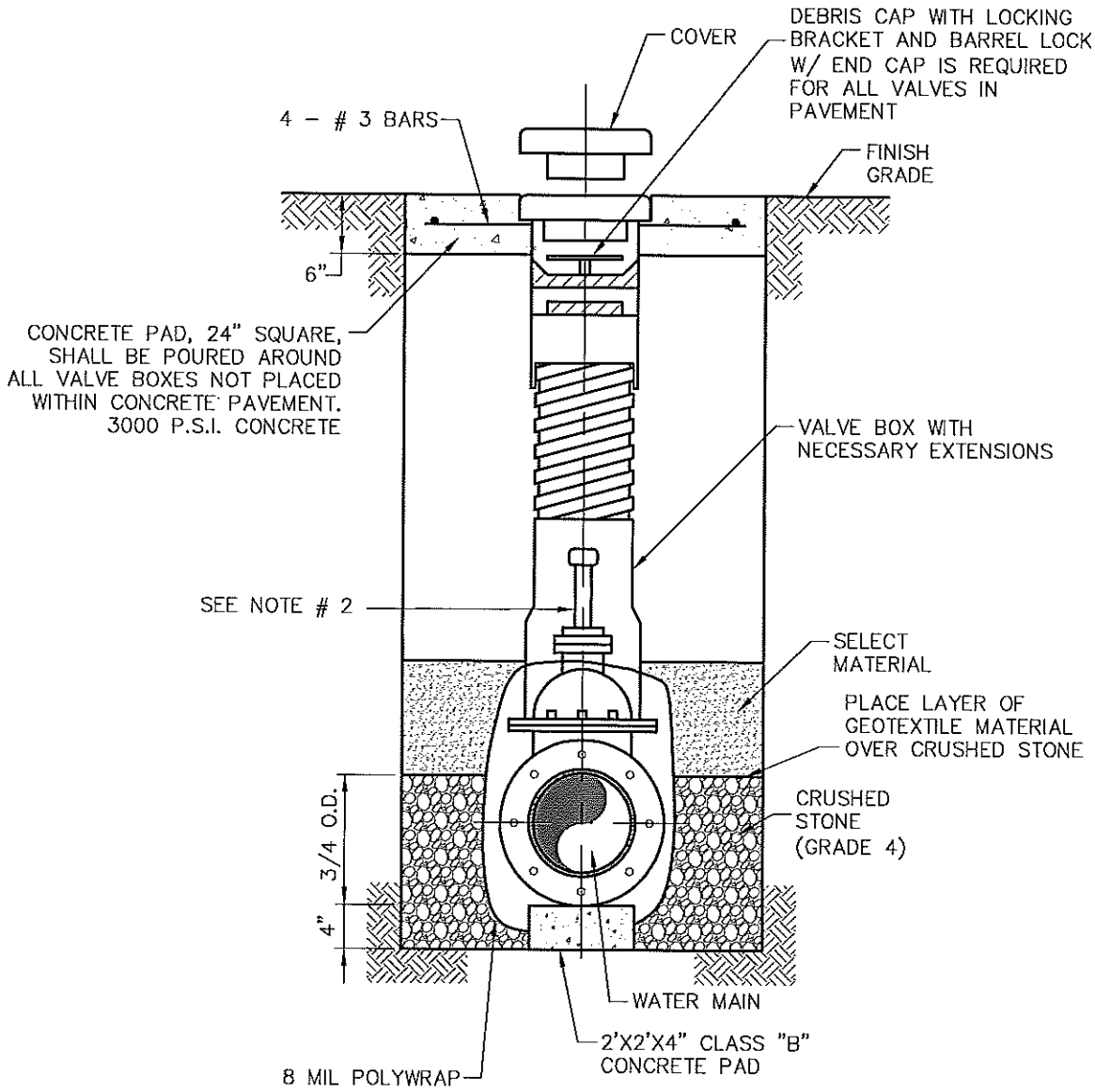

TYPICAL VALVE SETTING & BOX

NOTE:

1. 4"–12" R.S. GATE VALVES SHALL BE IN ACCORDANCE WITH TOWN OF ADDISON WATER SYSTEM REQUIREMENTS.
2. A PERMANENTLY ATTACHED VALVE EXTENSION STEM SHALL BE REQUIRED FOR ANY VALVE WHERE THE OPERATING NUT IS LOCATED IN EXCESS OF 5 FEET BELOW THE TOP OF VALVE BOX. THIS EXTENSION SHALL BE OF SUFFICIENT LENGTH TO INSURE THAT ITS TOP IS WITHIN 5 FEET OF VALVE BOX LID.
3. BLUE "V" (3") CUT INTO FACE OF NEAREST CURB AND POINTING TOWARD THE VALVE.
4. ALL IRON MATERIALS SHALL BE DOMESTIC. (MADE IN USA)
5. CRUSHED STONE SHALL BE 3/4", PASSING #4 SIEVE.

Addison! PUBLIC WORKS DEPARTMENT	VALVE SETTING BOX	STANDARD CONSTRUCTION DETAILS WATER		
		DATE: AUGUST, 2010	REV DATE: –	SHEET : SD–W09

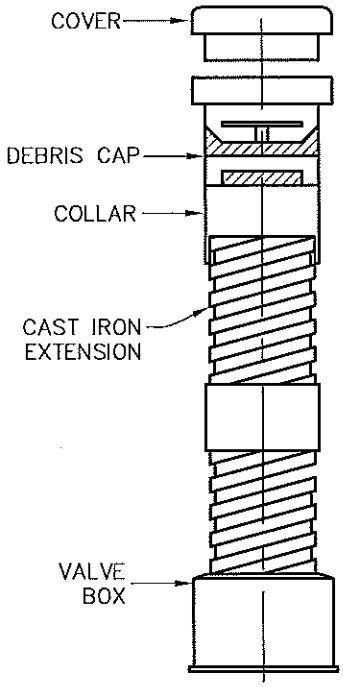

FOR BURY HEIGHT 5' OR LESS

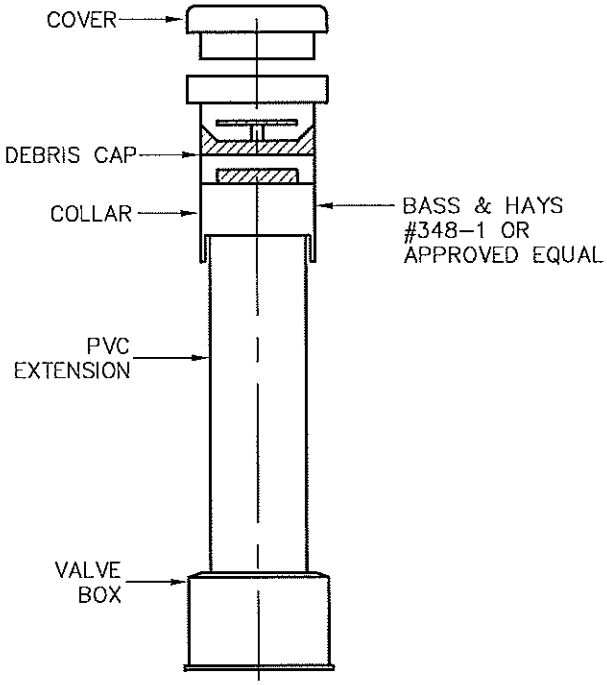

FOR BURY HEIGHT GREATER THAN 5'

NOTE

1. ALL CAST IRON FITTINGS SHALL BE DOMESTIC. (MADE IN U.S.A.)
2. VALVE BOXES SHALL BE PROVIED FOR BURIED VALVES. THESE BOXES SHALL BE THREE (3) PIECE SCREW TYPE CAST IRON OF THE EXTENSION TYPE AND SHALL BE: BASS & HAYS THREE (3) PIECE ADJUSTABLE SCREW TYPE, EAST JORDAN IRON WORKS 8560 W/ 6800 LID, MUELLER NO. H-10360 OR APPROVED EQUAL. THE THREE (3) PIECES SHALL CONSIST OF THE TOP SECTION, BOTTOM SECTION AND COVER.

Addison! PUBLIC WORKS DEPARTMENT	VALVE BOX WITH EXTENSION	STANDARD CONSTRUCTION DETAILS WATER		
		DATE: AUGUST, 2010	REV DATE: –	SHEET : SD-W10

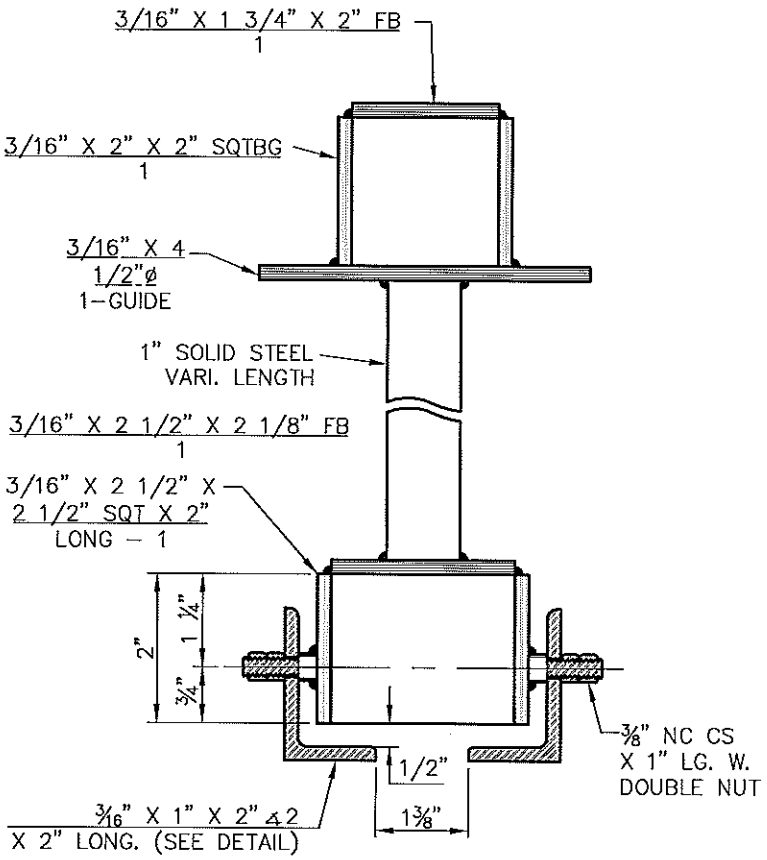

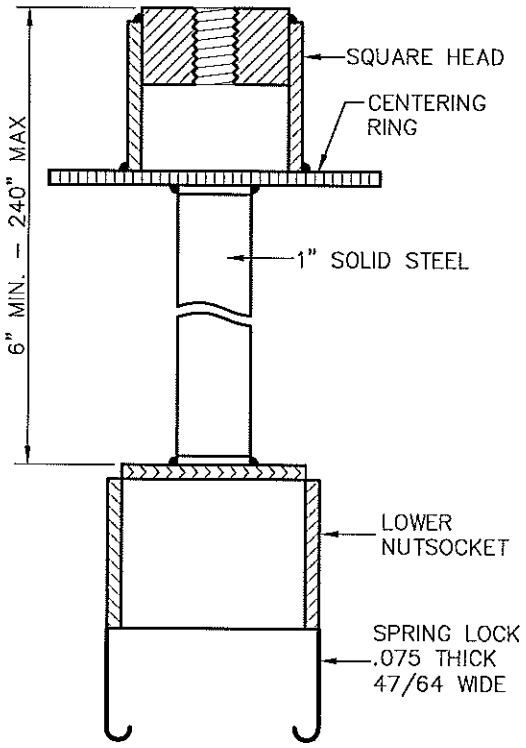

NOTE: TO BE USED ON ALL VALVES DEEPER THAN 5'-0".

TYPE - B
VALVE EXTENSION

SPRING LOCK
VALVE EXTENSION

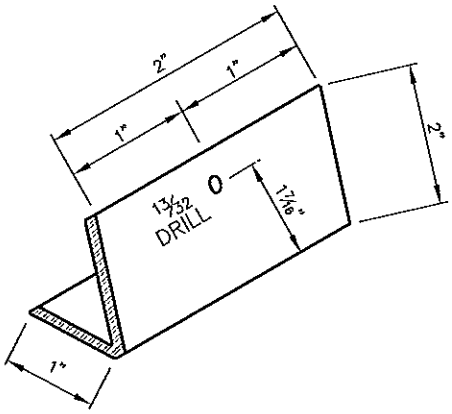

DETAIL

Addison! PUBLIC WORKS DEPARTMENT	VALVE EXTENSION	STANDARD CONSTRUCTION DETAILS WATER		
		DATE: AUGUST, 2010	REV DATE: -	SHEET : SD-W11

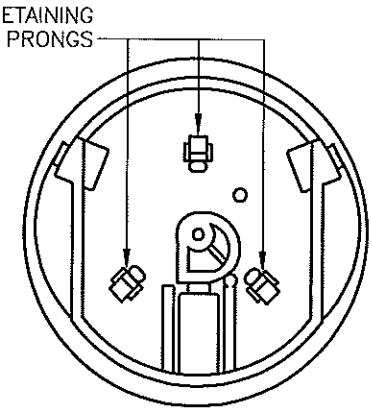

BOTTOM VIEW

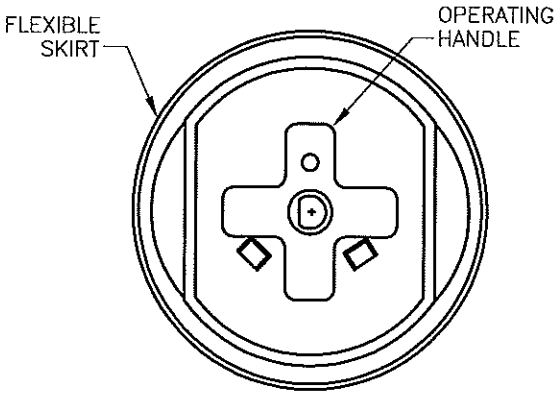

TOP VIEW

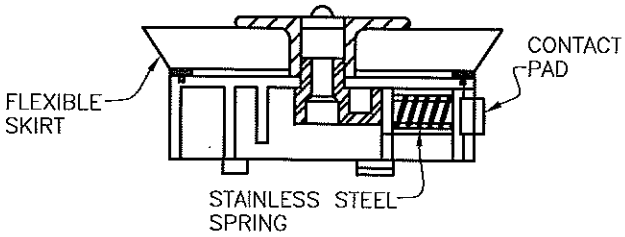

SECTION VIEW

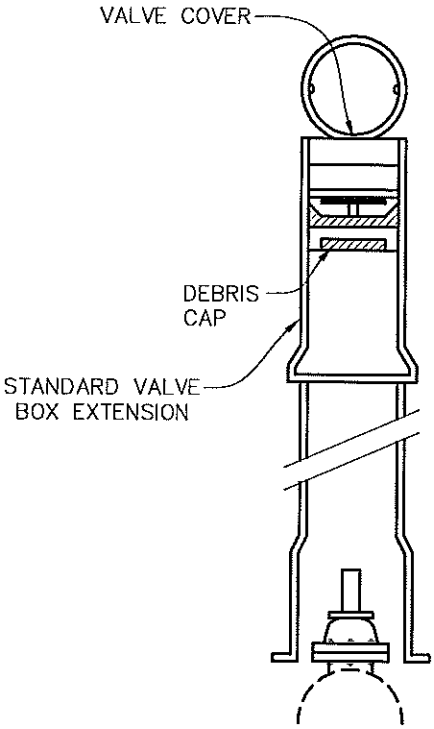

NOTES

1. DEBRIS CAP SHALL BE INSTALLED AS CLOSE AS POSSIBLE UNDER THE CAST IRON COVER WITHOUT INTERFERING WITH COVER OPERATION.
2. FLEXIBLE SKIRT OF THE DEBRIS CAP SHALL BE TRIMMED TO PROVIDE A SMOOTH CONTACT WITH THE INTERIOR DIAMETER OF THE PIPE.
3. THE DEBRIS CAP SHALL BE MANUFACTURED BY SW SERVICES, INC., PHOENIX, ARIZONA MONDEL NO. DC 457 WITH LOCKING BRACKET MODEL NO. DCLD4 AND BARREL LOCK.
4. THE CAP SHALL BE CONSTRUCTED TO ALLOW THE DEVICE TO BE SECURED BY A LOCK. THE LOCK (PAD, BARREL, ETC.) SHALL BE SUPPLIED BY THE TOWN OF ADDISON.

Addison! PUBLIC WORKS DEPARTMENT	DEBRIS CAP	STANDARD CONSTRUCTION DETAILS WATER		
		DATE: AUGUST, 2010	REV DATE: –	SHEET : SD–W12

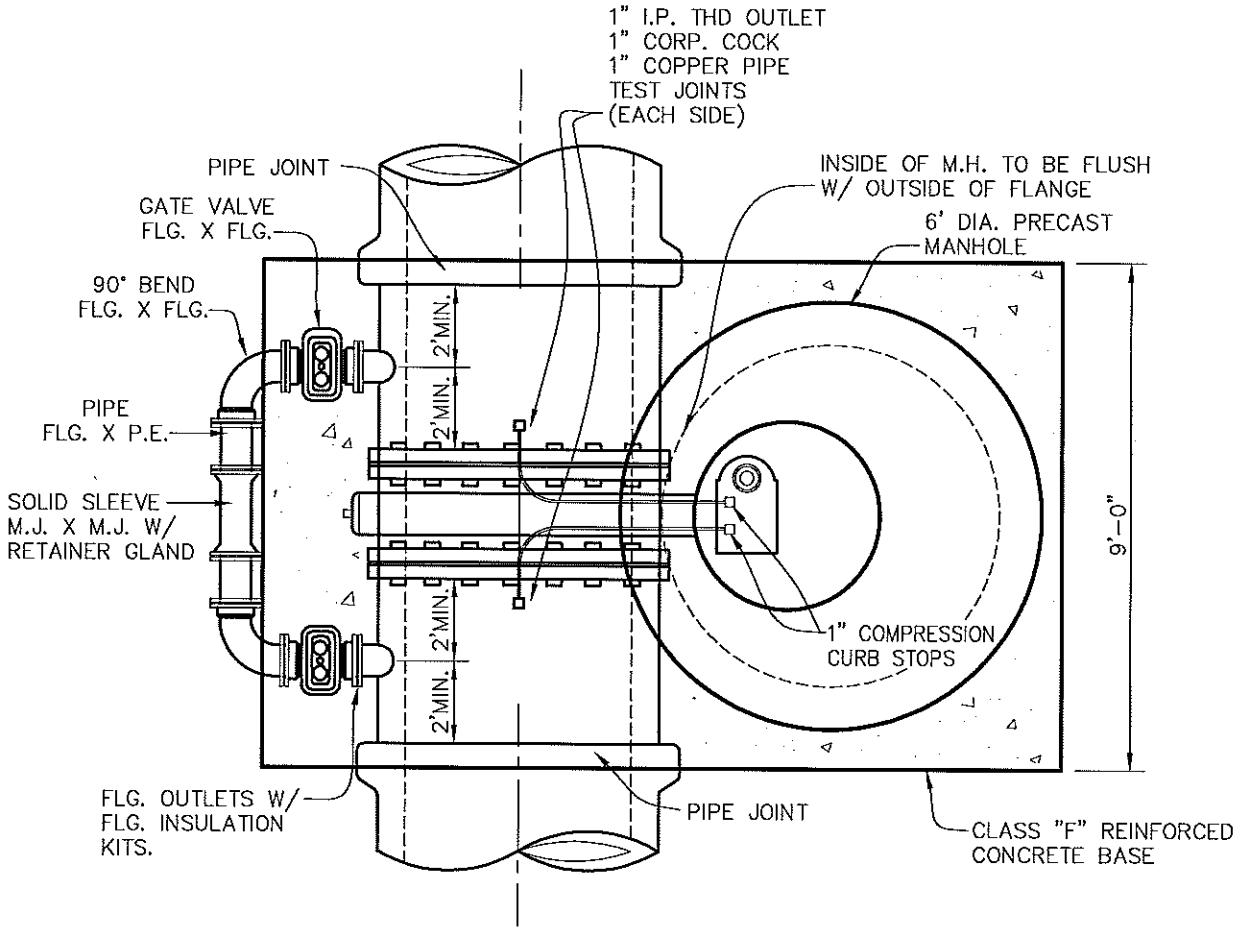

PLAN
NTS

NOTES:
1. PADS POURED ON UNDISTURBED SOIL OR 12" STABILIZED BACKFILL MATERIAL.
2. BYPASS SIZE SPECIFIED BY THE PUBLIC WORKS DEPARTMENT.

Addison! DEPARTMENT OF PUBLIC WORKS	BUTTERFLY VALVE WITH MANHOLE INSTALLATION	STANDARD CONSTRUCTION DETAILS WATER		
		DATE: AUGUST, 2010	REV DATE: –	SHEET : SD-W13

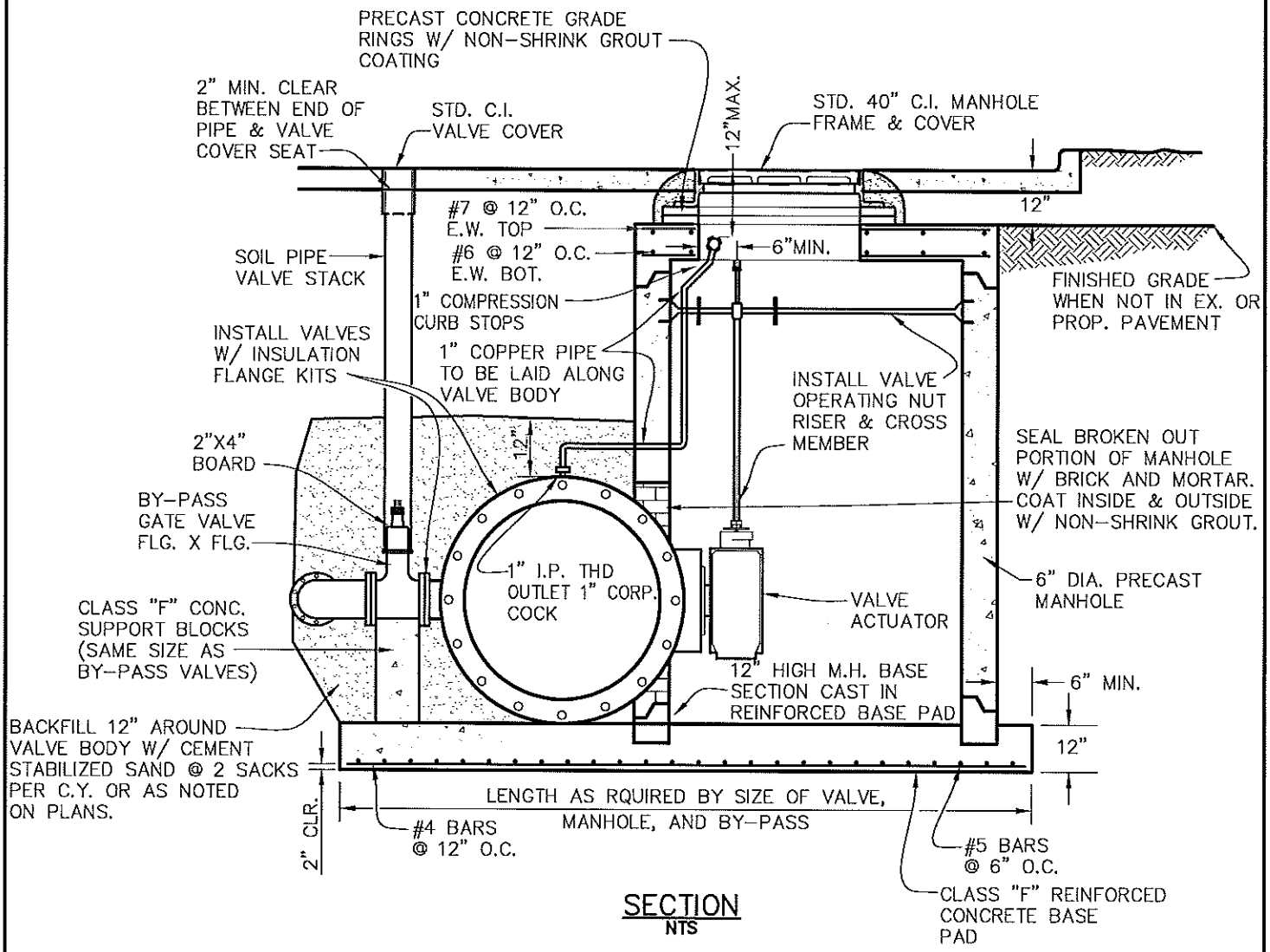

SECTION
NTS

NOTES:
1. PADS POURED ON UNDISTURBED SOIL OR 12" STABILIZED BACKFILL MATERIAL.
2. BYPASS SIZE SPECIFIED BY THE PUBLIC WORKS DEPARTMENT.

Addison! DEPARTMENT OF PUBLIC WORKS	BUTTERFLY VALVE WITH MANHOLE INSTALLATION	STANDARD CONSTRUCTION DETAILS WATER		
		DATE: AUGUST, 2010	REV DATE: –	SHEET : SD-W14

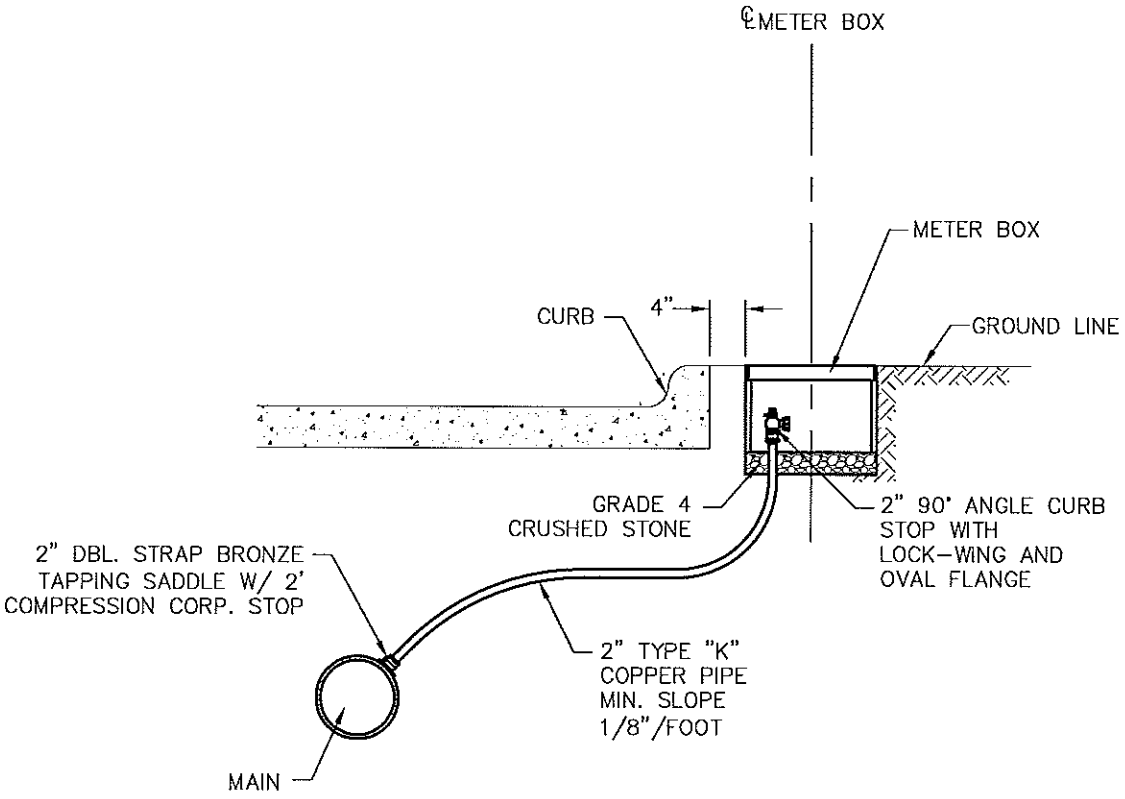

2" BLOW OFF

Type "K" Copper Service Pipe.	Double Strap Bronze Service Saddle with C.C. Threads	East Jordan Iron Works Galvanized Meter Box With Iron Ring & Cover				
		Min. Dia.	Covers & Rigns	Min. Ht.	Min. Can Weight	Min. Total Weight
2 Inch	2 Inch	28 Inches	20⅛ Inches	18 Inches	20 lbs.	127 lbs.

Addison! PUBLIC WORKS DEPARTMENT	2" BLOW OFF WITH METER BOX	STANDARD CONSTRUCTION DETAILS WATER		
		DATE: AUGUST, 2010	REV DATE: –	SHEET : SD-W15

NOTE:

1. DESIGN, SITE REQUIREMENTS, THE GENERAL OPERATION, PAINTING AND DELIVERY OF ALL FIRE HYDRANTS SHALL BE IN ACCORDANCE WITH THE TOWN OF ADDISON WATER SYSTEM REQUIREMENTS.
2. FIRE HYDRANTS SHALL BE LOCATED A MINIMUM OF 18" OUTSIDE OF THE AREA BETWEEN THE P.C.'S OF THE CORNER TURNING RADIUS AT INTERSECTIONS AND DRIVEWAYS (SEE PLAN VIEW).

PLAN VIEW

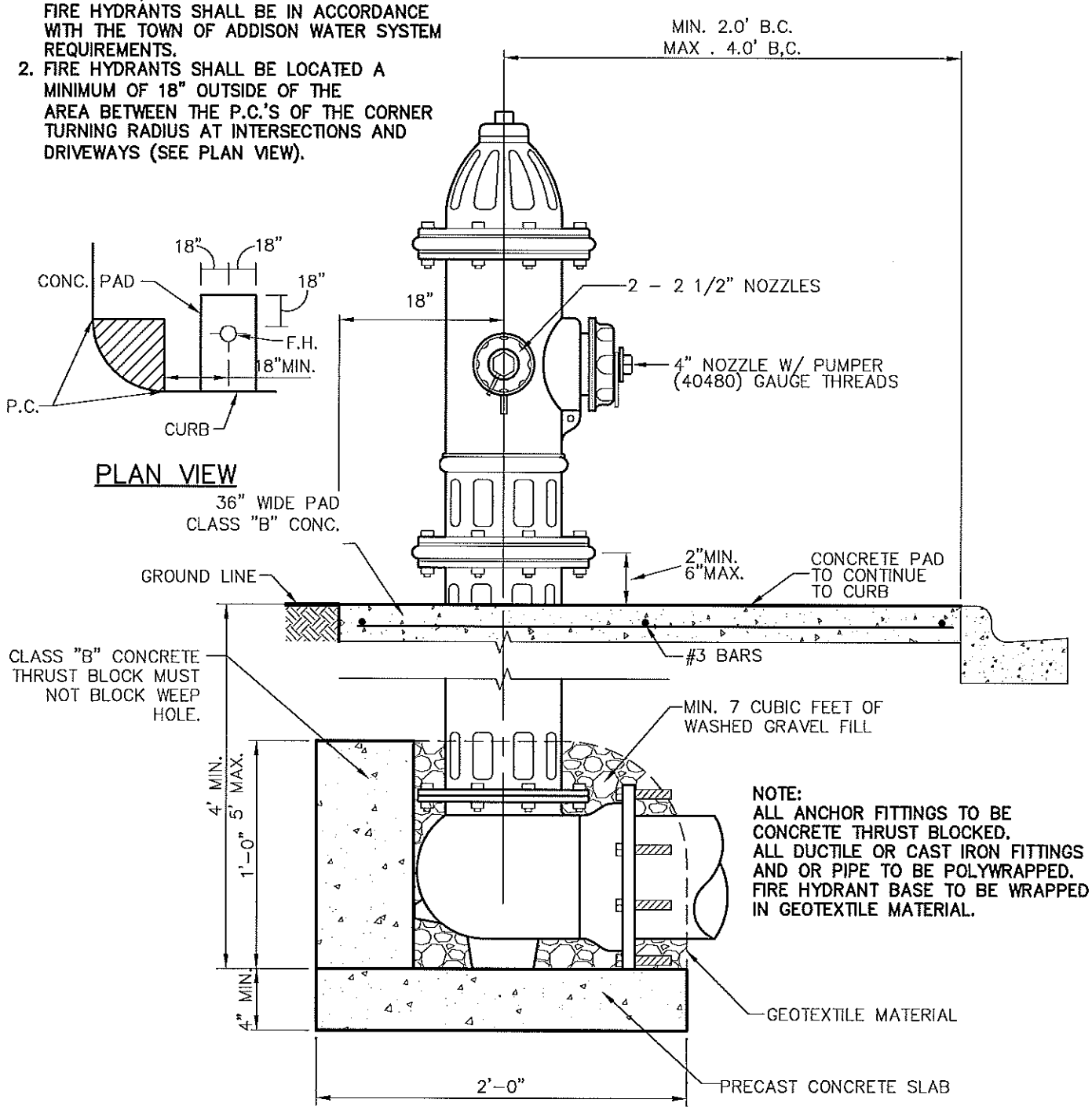

NOTE:
ALL ANCHOR FITTINGS TO BE CONCRETE THRUST BLOCKED.
ALL DUCTILE OR CAST IRON FITTINGS AND OR PIPE TO BE POLYWRAPPED.
FIRE HYDRANT BASE TO BE WRAPPED IN GEOTEXTILE MATERIAL.

TYPICAL FIRE HYDRANT INSTALLATION

Addison! PUBLIC WORKS DEPARTMENT	TYPICAL FIRE HYDRANT INSTALLATION	STANDARD CONSTRUCTION DETAILS WATER		
		DATE: AUGUST, 2010	REV DATE: –	SHEET : SD-W16

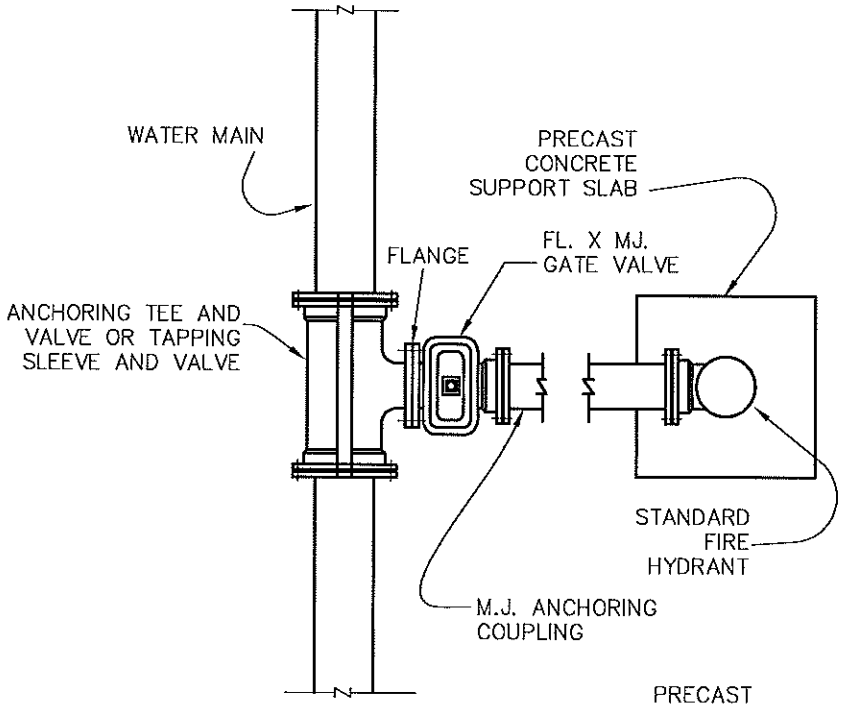

STANDARD INSTALLATION

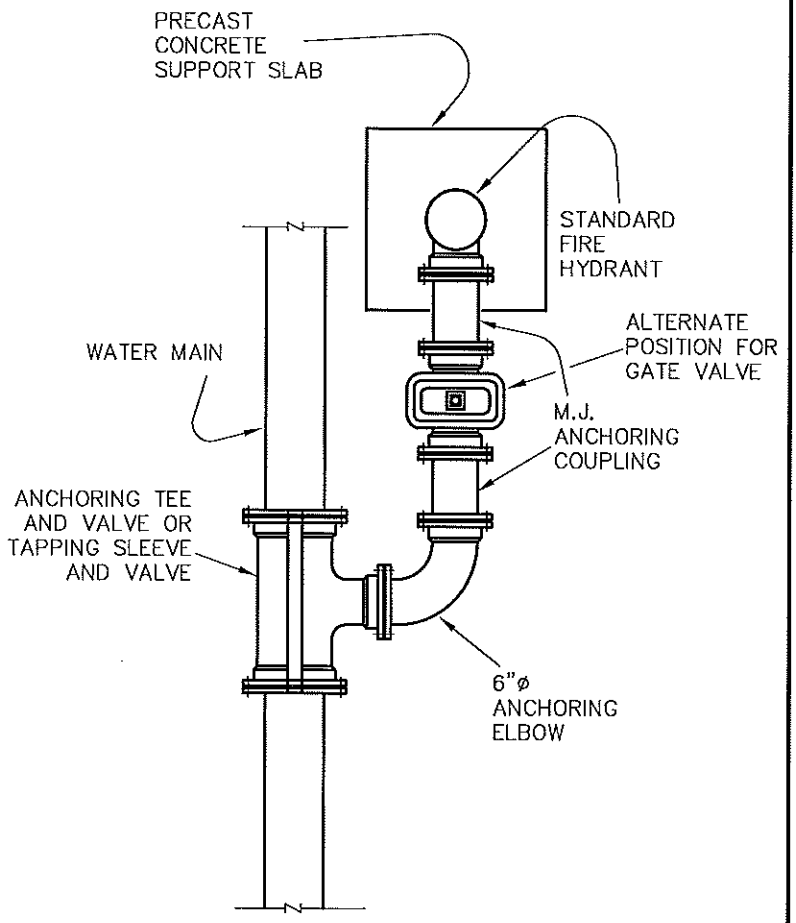

ALTERNATE INSTALLATION

NOTE:
MEGALUGS SHALL BE USED AT ALL TEES AND BENDS.

Addison! PUBLIC WORKS DEPARTMENT	TYPICAL FIRE HYDRANT INSTALLATION	STANDARD CONSTRUCTION DETAILS WATER		
		DATE: AUGUST, 2010	REV DATE: –	SHEET : SD-W17

NOTE
6"ø STEEL PIPE W/CONCRETE FILL 6' LENGTH (3' ABOVE PAVING, 3' BELOW PAVING) WITH 1-#4X5'-6" TO BE CASED IN 18"ø PIER TO DEPTH OF 1'-0" BELOW BOTTOM OF PIPE. USE 2-#6x12" REBAR THRU PIPE INTO CONCRETE PIER. PIPES TO BE PAINTED TRAFFIC YELLOW W/ 6" WHITE RELECTOR TAPE.

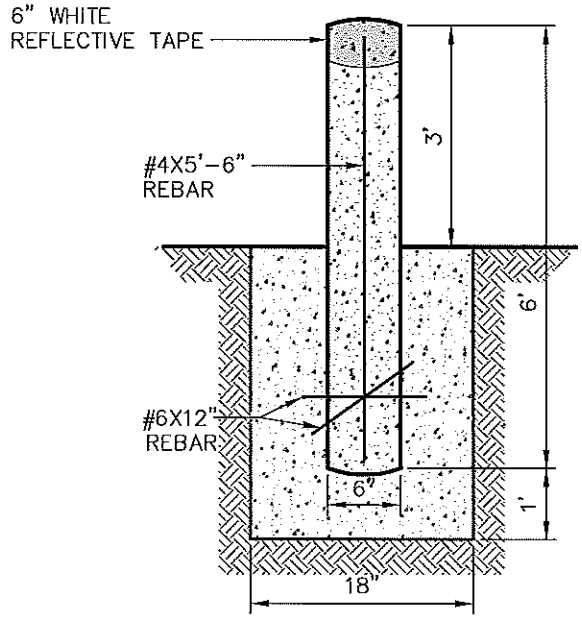

GUARD POST SECTION

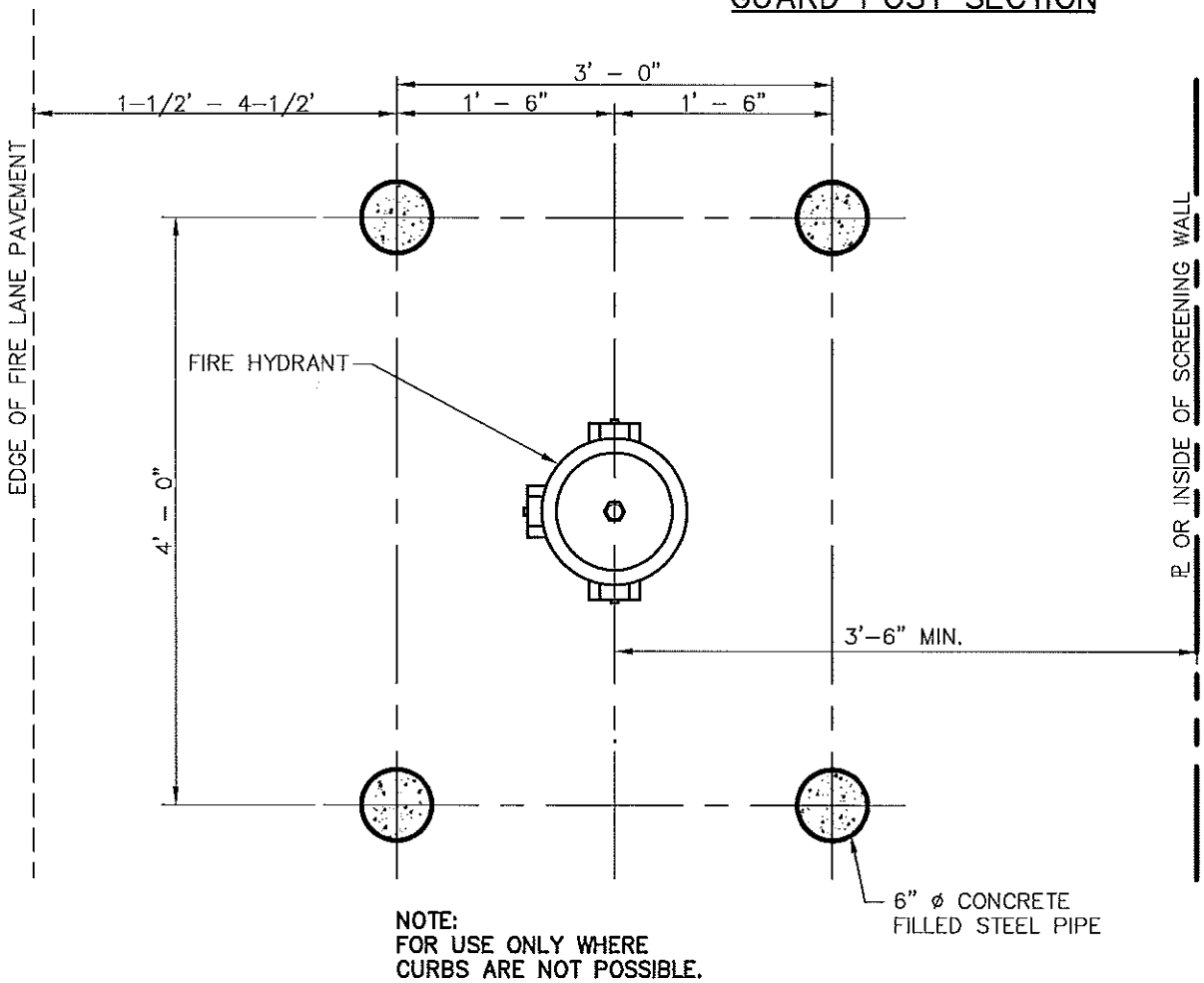

NOTE:
FOR USE ONLY WHERE
CURBS ARE NOT POSSIBLE.

FIRE HYDRANT GUARD POST DETAIL

Addison! PUBLIC WORKS DEPARTMENT	FIRE HYDRANT GUARD POST	STANDARD CONSTRUCTION DETAILS WATER		
		DATE: AUGUST, 2010	REV DATE: –	SHEET : SD-W18

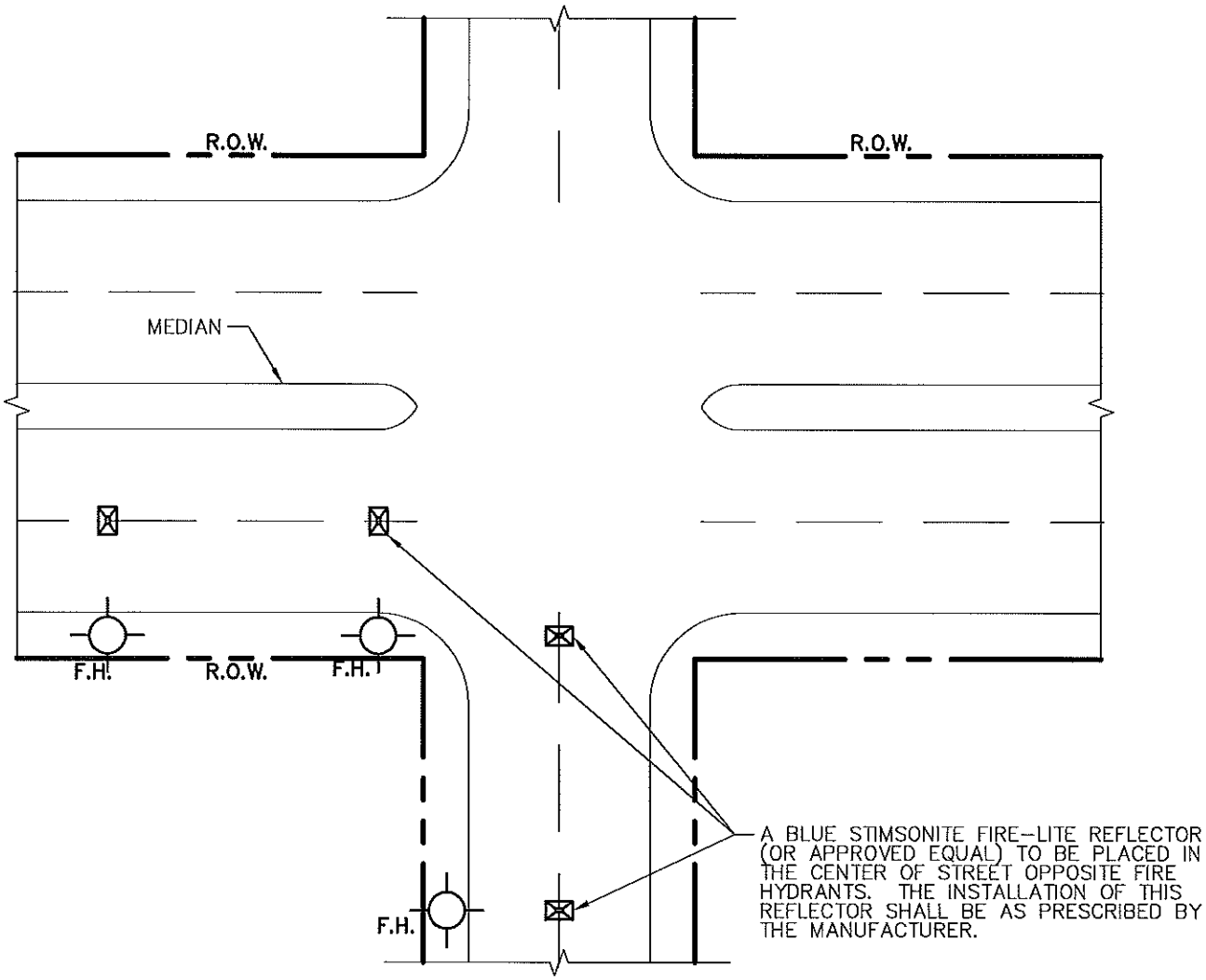

NOTE:
FIRE HYDRANT SHALL BE LOCATED OUTSIDE OF RADIUS.

TYPICAL FIRE HYDRANT REFLECTOR INSTALLATION

Addison! PUBLIC WORKS DEPARTMENT	FIRE HYDRANT REFLECTOR INSTALLATION	STANDARD CONSTRUCTION DETAILS WATER		
		DATE: AUGUST, 2010	REV DATE: –	SHEET : SD-W19

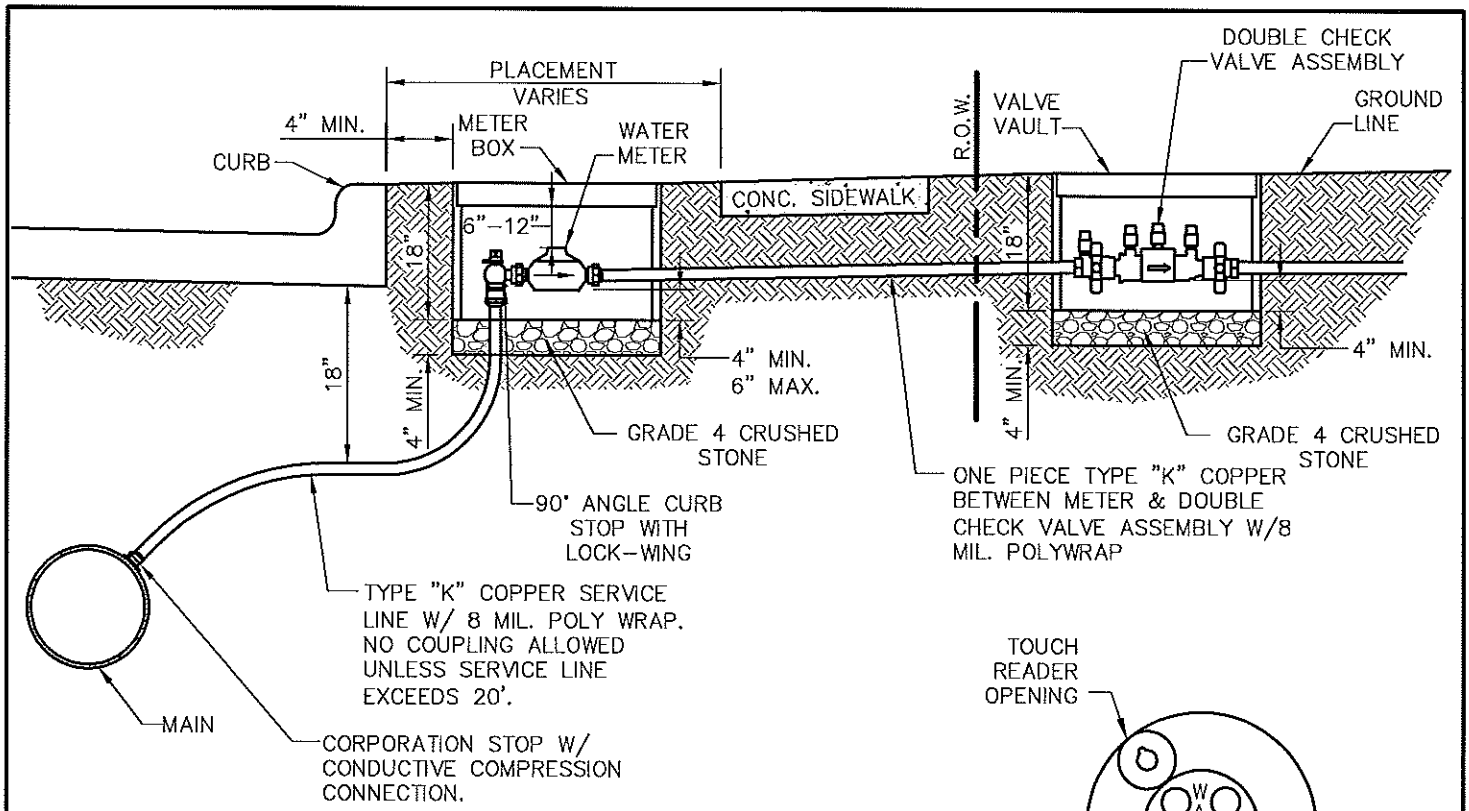

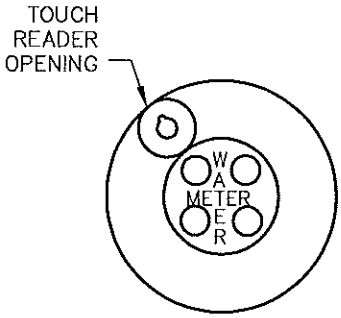

METER TOP

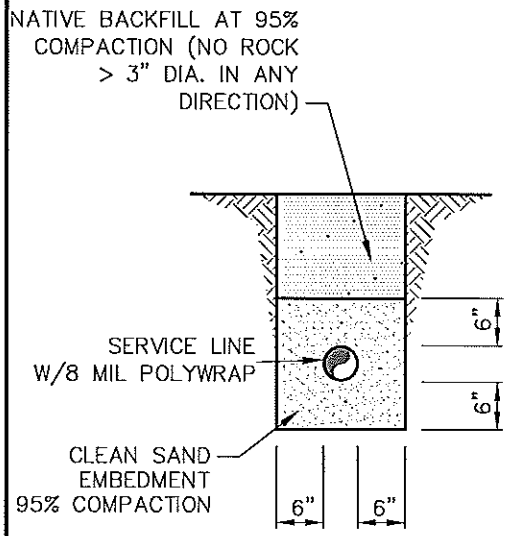

GENERAL INSTALLATION NOTES:

1. WATER METER SHALL BE PLACED IN CENTER OF LOT WITH THE SANITARY SEWER SERVICE TO BE LOCATED 10' DOWNSTREAM.
2. METER AND BOX SHALL BE SET BY THE CONTRACTOR TO ADDISON STANDARDS IN ALL CASES.
3. THE METER BOX SHALL BE SET WITHIN THE R.O.W. OR A DEDICATED UTILITY EASEMENT. IN ALL CASES, THE METER BOX SHALL BE PROTECTED FROM VEHICULAR TRAFFIC.
4. WATER SERVICES SHALL NOT BE CONNECTED TO DEAD END LINES OR FIRE HYDRANT LEADS.
5. ALL MATERIALS SHALL CONFORM TO THE TOWN OF ADDISON WATER SYSTEM REQUIREMENTS.

Type "K" Copper Service Pipe.	Double Strap Bronze Service Saddle with C.C. Threads	East Jordan Iron Works Galvanized Meter Box With Iron Ring & Cover				
		Min. Dia.	Covers & Rigns	Min. Ht.	Min. Can Weight	Min. Total Weight
3/4 Inch	3/4 Inch	18 Inches	12⅝ Inches	18 Inches	13 lbs.	42 lbs.
1 Inch	1 Inch	24 Inches	20⅛ Inches	18 Inches	17 lbs.	98 lbs.
1 1/2 Inch	1 1/2 Inch	28 Inches	20⅛ Inches	18 Inches	20 lbs.	127 lbs.
2 Inch	2 Inch	28 Inches	20⅛ Inches	18 Inches	20 lbs.	127 lbs.

Addison!
PUBLIC WORKS DEPARTMENT

SERVICE CONNECTION WITH METER BOX

STANDARD CONSTRUCTION DETAILS
WATER

DATE: AUGUST, 2010	REV DATE: –	SHEET : SD–W20

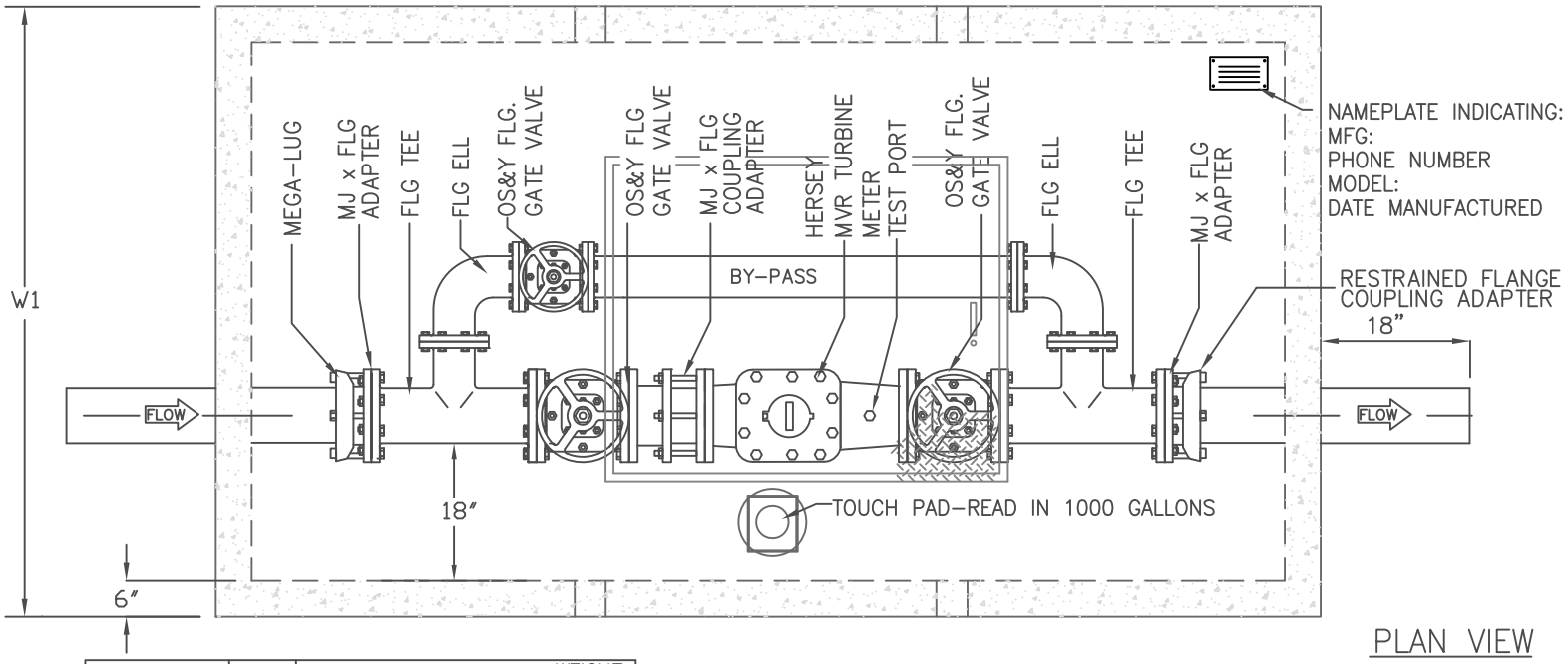

PLAN VIEW

MODEL	SIZE	L1	W1	H1	WEIGHT LBS
DMT-AD3	3"*	8'-8"	5'-0"	7'-6"	11,900
DMT-AD4	4"	8'-8"	5'-0"	7'-6"	14,500
DMT-AD6	6"	13'-0"	7'-0"	7'-6"	18,000
DMT-AD8	8"	13'-0"	7'-0"	7'-6"	24,500

*: 3" METER REQUIRES 4" PIPE WITH 4X3 REDUCER UPSTREAM OF METER.

NOTE: IF METER HAS NO INTEGRAL TEST PORT, PROVIDE X" BY 2" "TEE" OR SADDLE, 2" STAINLESS STEEL BALL VALVE WITH STAINLESS STEEL HANDLE, AND 2" BRASS PLUG BETWEEN METER AND VALVE.

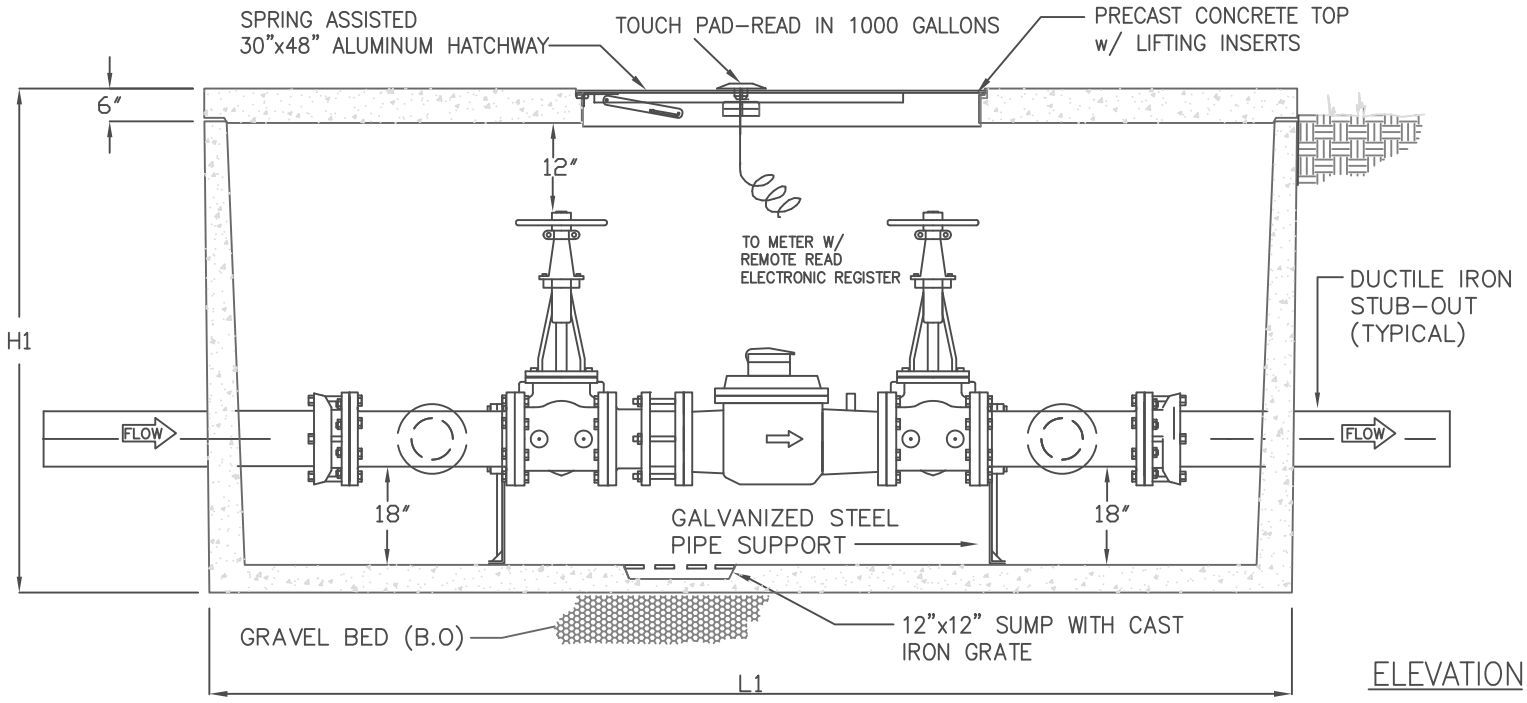

ELEVATION

NOTES:

1. ALL CONCRETE SHALL BE CLASS 1 CONCRETE WITH DESIGN STRENGTH OF 4500 PSI AT 28 DAYS. UNITS ARE OF MONOLITHIC CONSTRUCTION AT FLOOR AND FIRST STAGE OF WALL WITH SECTIONAL RISER TO REQUIRED DEPTH.
2. ALL REINFORCEMENT SHALL BE GRADE 60 REINFORCED STEEL REBAR CONFORMING TO ASTM A615 ON REQUIRED CENTERS OR EQUAL.
3. ALL HATCHWAYS SHALL BE ¼" ALUMINUM DIAMOND PLATE COVER, WITH ¼" EXTRUDED ALUMINUM FRAME. HATCH TO BE FURNISHED WITH 316 STAINLESS STEEL SNAP LOCK AND HINGES.
4. THE METER ASSEMBLY SHALL BE FACTORY ASSEMBLED IN VAULT AND HYDROSTATICALLY TESTED PRIOR TO DELIVERY. PIPE, VALVES AND FITTINGS OF THE ASSEMBLY SHALL BE IN ACCORDANCE WITH THE TOWN OF ADDISON WATER SYSTEM REQUIREMENTS.

ADDISON INFRASTRUCTURE DEPARTMENT	TURBINE WATER METER ASSEMBLY	STANDARD CONSTRUCTION DETAILS WATER	
		DATE: AUGUST, 2009	LAST REV DATE: MAY 2016	SHEET : SD-W21

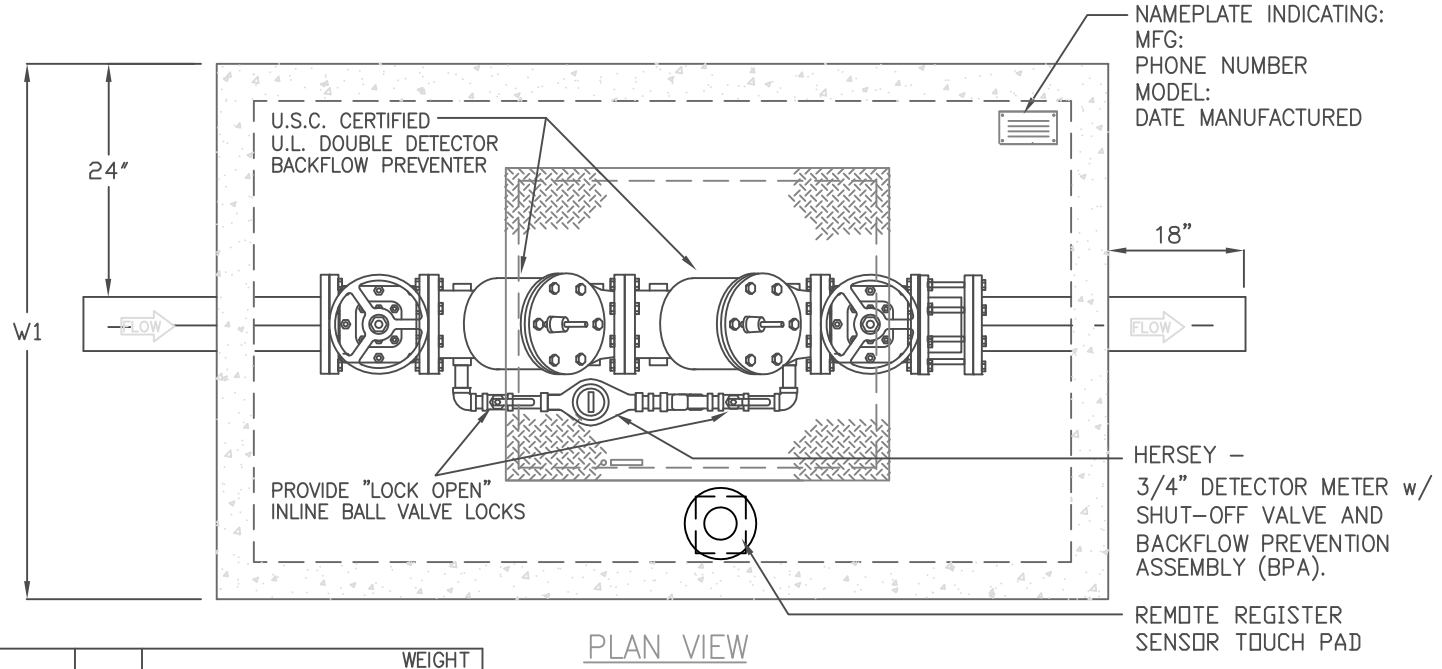

PLAN VIEW

MODEL	SIZE	L1	W1	H1	WEIGHT LBS
DDBP–AD4	4"	7'–10"	4'–4"	6'–0"	9,000
DDBP–AD6	6"	7'–10"	4'–4"	6'–0"	9,200
DDBP–AD8	8"	8'–8"	5'–0"	6'–0"	15,000
DDBP–AD10	10"	9'–0"	6'–0"	7'–0"	18,000

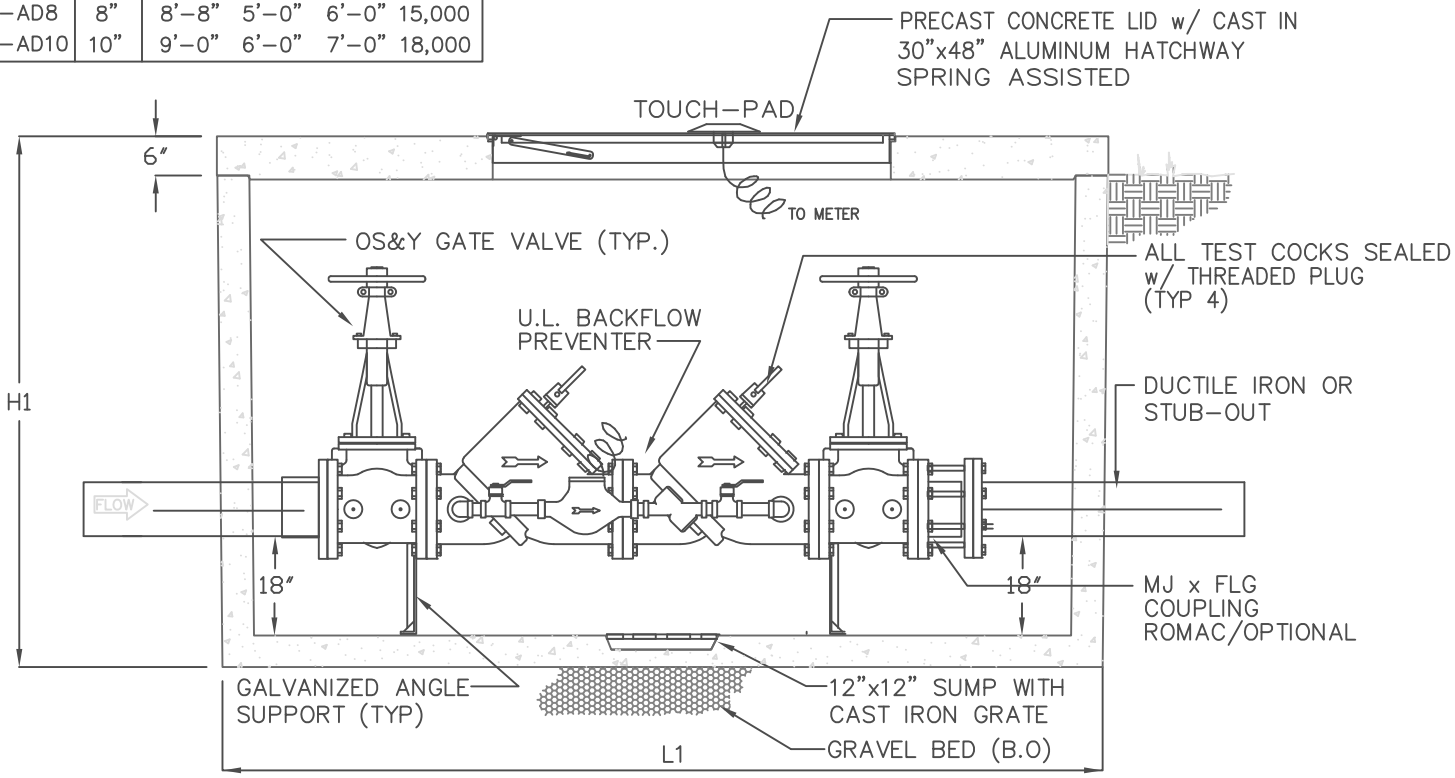

ELEVATION

NOTES:

1. ALL CONCRETE SHALL BE CLASS 1 CONCRETE WITH DESIGN STRENGTH OF 4500 PSI AT 28 DAYS. UNITS ARE OF MONOLITHIC CONSTRUCTION AT FLOOR AND FIRST STAGE OF WALL WITH SECTIONAL RISER TO REQUIRED DEPTH.
2. ALL REINFORCEMENT SHALL BE GRADE 60 REINFORCED STEEL REBAR CONFORMING TO ASTM A615 ON REQUIRED CENTERS OR EQUAL.
3. ALL HATCHWAYS SHALL BE ¼" ALUMINUM DIAMOND PLATE COVER, WITH ¼" EXTRUDED ALUMINUM FRAME. HATCH TO BE FURNISHED WITH 316 STAINLESS STEEL SNAP LOCK AND HINGES.
4. THE BACKFLOW ASSEMBLY SHALL BE FACTORY ASSEMBLED IN VAULT AND HYDROSTATICALLY TESTED PRIOR TO DELIVERY. PIPE, VALVES AND FITTINGS OF THE ASSEMBLY SHALL BE IN ACCORDANCE WITH THE TOWN OF ADDISON WATER SYSTEM REQUIREMENTS.

ADDISON SM	INFRASTRUCTURE DEPARTMENT	DOUBLE CHECK DETECTOR ASSEMBLY	STANDARD CONSTRUCTION DETAILS WATER	
			DATE: AUGUST, 2009	LAST REV DATE: MAY 2016	SHEET : SD–W22