Traffic Impact Analysis

Redevelopment of Addison Sam's Club Site

SWC Belt Line Road at Midway Road

Addison, TX

Original Submission: August 4, 2015

Updated Submission: November 2, 2015

Updated Submission: December 1, 2015

Kimley-Horn and Associates, Inc.
Dallas, Texas

Project #064488000
Registered Firm F-928

Kimley»Horn

Traffic Impact Analysis

Redevelopment of Addison Sam's Club Site

SWC Belt Line Road at Midway Road
Addison, TX

Prepared by:

Kimley-Horn and Associates, Inc.
12750 Merit Drive, Suite 1000
Dallas, Texas 75251
Registered Firm F-928

Contact:
Scot Johnson, P.E., PTOE
Hiron Fernando, E.I.T.
Connie Xavier
972-770-1300

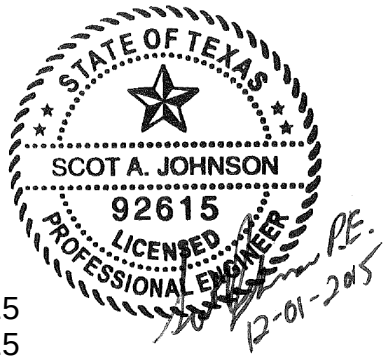

Original Submission: August 4, 2015
Updated Submission: November 2, 2015
Updated Submission: December 1, 2015

TABLE OF CONTENTS

EXECUTIVE SUMMARY iii
I. INTRODUCTION 1
A. PURPOSE 1
B. METHODOLOGY 1
II. EXISTING AND FUTURE AREA CONDITIONS 4
A. ROADWAY CHARACTERISTICS 4
B. EXISTING STUDY AREA 5
C. PROPOSED SITE IMPROVEMENTS 5
D. EXISTING TRAFFIC VOLUMES 6
III. PROJECT TRAFFIC CHARACTERISTICS 9
A. SITE-GENERATED TRAFFIC 9
B. DEVELOPMENT OF 2015 REDUCED EXISTING TRAFFIC VOLUMES 10
C. TRIP DISTRIBUTION AND ASSIGNMENT 10
D. DEVELOPMENT OF 2017 BACKGROUND TRAFFIC 11
E. DEVELOPMENT OF 2017 TOTAL TRAFFIC 11
F. DEVELOPMENT OF 2035 BACKGROUND AND TOTAL TRAFFIC 11
IV. TRAFFIC OPERATIONS ANALYSIS 21
A. ANALYSIS METHODOLOGY 21
B. ANALYSIS RESULTS 21
C. 2015 EXISTING TRAFFIC OPERATIONS 24
D. 2017 BACKGROUND TRAFFIC OPERATIONS 24
E. 2017 BACKGROUND PLUS SITE-GENERATED TRAFFIC OPERATIONS 24
F. 2035 BACKGROUND TRAFFIC OPERATIONS 24
G. 2035 BACKGROUND PLUS SITE-GENERATED TRAFFIC OPERATIONS 25
H. PROPOSED DRIVE 1 AT BELTWAY DRIVE STOP-SIGN CONTROL 25
I. INTERNAL ROADWAY INTERSECTIONS 25
V. ALTERNATIVE TWO 27
A. EXISTING AND FUTURE AREA CONDITIONS 27
B. PROJECT TRAFFIC CHARACTERISTICS 27
C. ALTERNATIVE 2 TRAFFIC CHARACTERISTICS 28
VI. CONCLUSIONS AND RECOMMENDATIONS 38
APPENDIX 39

LIST OF EXHIBITS

EXHIBIT 1: VICINITY MAP 2
EXHIBIT 2: CONCEPTUAL SITE PLAN 3
EXHIBIT 3: LANE ASSIGNMENTS AND INTERSECTION CONTROL 7
EXHIBIT 4: 2015 EXISTING TRAFFIC VOLUMES 8
EXHIBIT 5: TRIP DISTRIBUTION AND TRAFFIC ASSIGNMENT - 2017 13
EXHIBIT 6: TRIP DISTRIBUTION AND TRAFFIC ASSIGNMENT - 2035 14
EXHIBIT 7: SITE-GENERATED TRAFFIC VOLUMES - 2017 15
EXHIBIT 8: SITE-GENERATED TRAFFIC VOLUMES - 2035 16
EXHIBIT 9: 2017 BACKGROUND TRAFFIC VOLUMES 17
EXHIBIT 10: 2017 BACKGROUND PLUS SITE-GENERATED TRAFFIC VOLUMES 18
EXHIBIT 11: 2035 BACKGROUND TRAFFIC VOLUMES 19
EXHIBIT 12: 2035 BACKGROUND PLUS SITE-GENERATED TRAFFIC VOLUMES 20
EXHIBIT 13: LANE ASSIGNMENTS AND INTERSECTION CONTROL (ALTERNATIVE 2) 31
EXHIBIT 14: TRIP DISTRIBUTION AND TRAFFIC ASSIGNMENT - 2017 (ALTERNATIVE 2) 32
EXHIBIT 15: TRIP DISTRIBUTION AND TRAFFIC ASSIGNMENT - 2035 (ALTERNATIVE 2) 33
EXHIBIT 16: SITE-GENERATED TRAFFIC VOLUMES - 2017 (ALTERNATIVE 2) 34
EXHIBIT 17: SITE-GENERATED TRAFFIC VOLUMES - 2035 (ALTERNATIVE 2) 35
EXHIBIT 18: 2017 BACKGROUND PLUS SITE-GENERATED TRAFFIC VOLUMES (ALTERNATIVE 2) 36
EXHIBIT 19: 2035 BACKGROUND PLUS SITE-GENERATED TRAFFIC VOLUMES (ALTERNATIVE 2) 37

LIST OF TABLES

TABLE 1 - TRIP GENERATION FOR SAM'S CLUB REDEVELOPMENT SITE 10
TABLE 2 - TRIP GENERATION FOR SAM'S CLUB 10
TABLE 3 - GENERAL DIRECTIONAL DISTRIBUTION 11
TABLE 4 – LEVEL OF SERVICE DEFINITIONS 21
TABLE 5 – TRAFFIC OPERATIONAL RESULTS – WEEKDAY AM PEAK HOUR 22
TABLE 6 – TRAFFIC OPERATIONAL RESULTS – WEEKDAY PM PEAK HOUR 23
TABLE 7 – TRAFFIC OPERATIONAL RESULTS – INTERNAL INTERSECTION 26
TABLE 8 – TRAFFIC OPERATIONAL RESULTS FOR ALTERNATIVE 2 – WEEKDAY AM PEAK HOUR 29
TABLE 9 – TRAFFIC OPERATIONAL RESULTS FOR ALTERNATIVE 2– WEEKDAY PM PEAK HOUR 30

EXECUTIVE SUMMARY

The proposed mixed-use center is located on the southwest corner of Belt Line Road and Midway Road in Addison, Texas. The site currently contains a Sam's Club membership warehouse store, and is proposed to be redeveloped with 15,000 SF retail, 350 units of multi-family residential and 233 units of townhomes. This site is planned to be completed by 2017. This study is intended to identify traffic generation characteristics, identify potential traffic related impacts on the local street system, and to develop mitigation measures required for identified impacts.

After consultation with City of Addison staff, the following existing intersections were selected to be part of this study:

- Surveyor Boulevard at Beltway Drive
- Surveyor Boulevard at Belt Line Road
- Belt Line Road at Runyon Road
- Belt Line Road at Northwest Drive (existing limited access median opening)
- Belt Line Road at Northeast Drive (existing right-in right-out access median opening)
- Belt Line Road at Midway Road
- Belt Line Road at Beltway Drive
- Midway Road at Lindbergh Drive
- Midway Road at East Drive
- Midway Road at Beltway Drive
- Midway Road at Beltwood Parkway
- Midway Road at Proton Drive

The analysis also included existing and new site driveways to the surrounding roadways.

The analysis was separated into two alternatives. Alternative 1 included three north and one south driveways. Alternative 2 included the three north driveways and three south driveways. These alternatives were modeled for 2017 and 2035 scenarios, where the 2035 scenarios included access to and from another separate east driveway. This report details Alternative 1 in detail in the first section of the report, and an abridged discussion of Alternative 2 in the second section of the report, using the same traffic assumptions for both except where noted.

In summary, Alternative 1 would have access via a total of four driveways in 2017 and five in 2035. Three of those driveways would have access to Belt Line Road, one would have access to Beltway Drive, and one on Midway Road. Alternative 2 is similar, except it adds proposed Drives 2 and 3 to Beltway Drive. Of these seven driveways, three intersections already exist as part of the existing Sam's Club site (Runyon, Northwest, and Northeast drives). In the 2035 scenario, the existing stub of the restaurant access (East Drive) on Midway Road was assumed to be extended to provide access to the site, as a part of future redevelopment of the hard corner. In 2035 the current East Drive full median opening was assumed to be restricted to northbound left-turn movements only due to access management principles and the East Drive's proximity to Belt Line Road.

Traffic operations were analyzed at the study intersections for existing volumes, year 2017 and 2035 background traffic volumes with the Sam's Club site traffic removed, and year 2017 and 2035 background plus redevelopment site-generated traffic volumes. The future years

correspond to the projected site buildout year and the regional buildout year. Conditions were analyzed for the weekday AM and PM peak hours.

This mixed-use redevelopment is expected to generate approximately 296 new weekday AM peak hour one-way trips, and 394 new weekday PM peak hour one-way trips. By the ITE *Trip Generation Manual, 9th Edition*, the existing Sam's Club would be expected to generate approximately 255 weekday AM peak hour one-way trips, and 600 weekday PM peak hour one-way trips. The 2015 traffic counts show that the existing Sam's Club appears to be generating a little less traffic than the research would predict. Due to the other uses sharing the same access points, there is no way to isolate and count the exact existing Sam's Club traffic. However, it is clear that the vehicular traffic generated by the mixed-use redevelopment will be only a little higher than the Sam's Club traffic in the AM peak hour, and significantly less than the Sam's Club traffic in the PM peak hour. The Sam's Club traffic which was identifiable was removed from the existing traffic volumes prior to those volumes being increased with the annual growth rate to form the 2017 and 2035 background traffic volumes.

The distribution of the new site-generated traffic volumes onto the street system was based on the surrounding roadway network, existing traffic patterns, and the project's proposed access locations. The signal timing of the signalized intersections was taken directly from the existing conditions, and no modifications were found to be necessary to maintain acceptable operations and accommodate the expected site-generated traffic.

Based on the analysis presented in this report, the proposed mixed-use redevelopment on the southwest corner of Belt Line Road and Midway Road can be successfully incorporated into the surrounding roadway network. The site does not result in a significant negative impact to intersection or roadway operating conditions either in 2017 or in 2035. In the highest peak hour, the site traffic makes up only 3.5% of the traffic at the intersection of Belt Line Road and Midway Road. As noted, this traffic volume and percentage of the total is probably less than the Sam's Club traffic today.

The proposed site driveways provide the appropriate level of access for the mixed-use redevelopment. The results show that the proposed Drive 1 to Beltway Drive will not negatively affect local traffic operations on Beltway Drive. The potential addition of Drive 2 and Drive 3 to Beltway Drive in the Alternative 2 case also does not hurt operations on Beltway Drive. However, since the redevelopment site achieves favorable access with only Drive 1 to Beltway Drive, the additional Drive 2 and Drive 3 should be considered optional from a traffic perspective.

An additional analysis of the internal traffic volumes at the western internal intersection (the junction of the extensions of Northwest Drive and Runyon Road) showed that an all-way stop intersection could accommodate the internal traffic volumes without noticable delay or queuing.

November 2, 2015 Update
This updated TIA includes modifications as a result of Town staff comments dated October 27, 2015. The staff comments are attached in the first **Appendix** section, along with responses to each comment.

December 1, 2015 Update
This updated TIA includes modifications to remove the roundabout discussion as a result of a Town staff comment from November 30, 2015. The site plan (Exhibit 2) was also updated to reflect the current one dated November 30, 2015. The land use mix has changed somewhat since the program used to develop the TIA, with small increases to the retail square footage and significant reductions in the townhome numbers. The reduction in site traffic from the change in townhomes offsets the increase in retail, so the site traffic numbers used in the analysis can still be considered conservatively high.

I. INTRODUCTION

A. Purpose

Kimley-Horn and Associates, Inc. (KHA) was retained to conduct a Traffic Impact Analysis (TIA) of future traffic conditions associated with the development of a mixed-use redevelopment located on the southwest corner of Belt Line Road and Midway Road in Addison, Texas. A site vicinity map is provided as **Exhibit 1**. **Exhibit 2** shows the proposed conceptual site plan. This study is intended to identify traffic generation characteristics, identify potential traffic related impacts on the local street system, and to develop mitigation measures required for identified impacts.

B. Methodology

The traffic evaluation was comprised of five scenarios for which weekday AM and PM peak hour intersection level of service analyses were performed. Based upon the project's anticipated completion date, 2017 was assumed as build-out year of the site, and 2035 was used as a regional buildout year. The first scenario analyzed existing traffic conditions (2015); the second analyzed background traffic conditions in the site buildout year (2017); the third scenario analyzed total traffic (background plus site-generated) conditions in the site buildout year (2017), the fourth scenario analyzed background traffic conditions in 2035, and the fifth scenario analyzed total traffic conditions in 2035. For both unsignalized and signalized intersections, the capacity analyses were conducted using the *Synchro 8*™ software package and its associated *Highway Capacity Manual* reports.

In addition to the configuration shown in the conceptual site plan in **Exhibit 2**, an Alternative 2 was also modeled, which included two additional driveways to Beltway Drive. Alternative 2 was examined using the same years and modeling assumptions as was the original analysis.

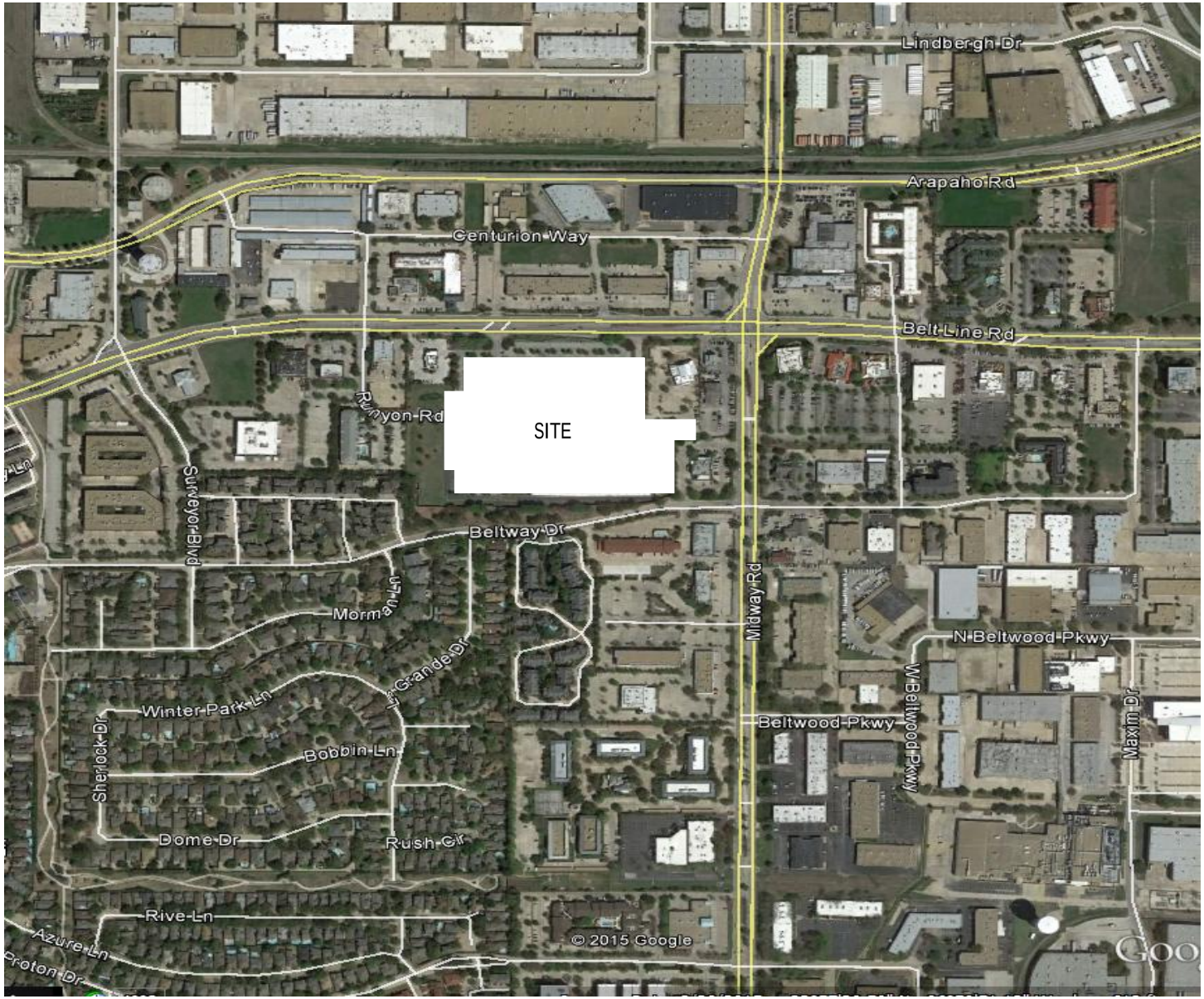

EXHIBIT 1

Vicinity Map

Addison Sam's Club Redevelopment - TIA

Kimley»Horn

North
↑

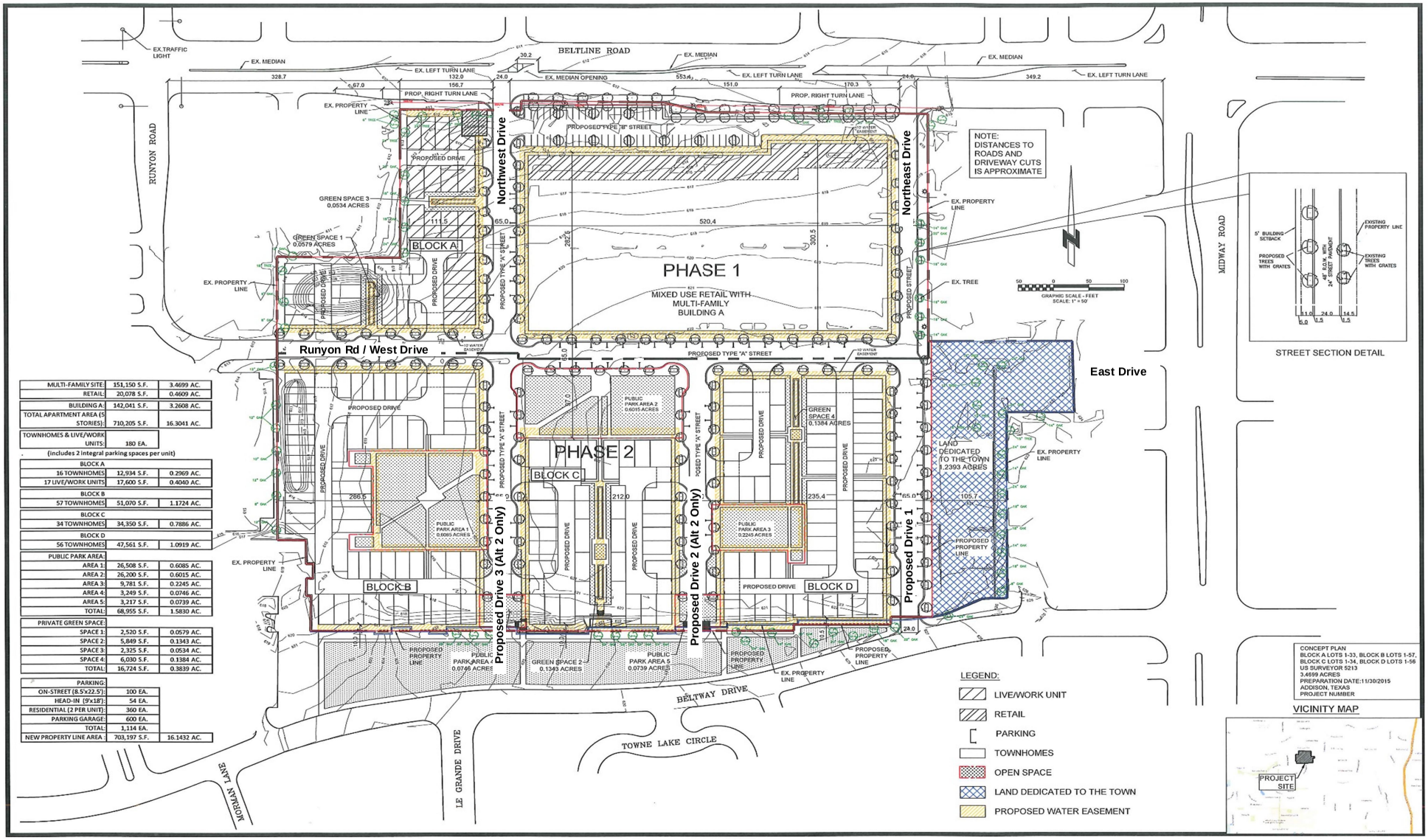

MULTI-FAMILY SITE:	151,150 S.F.	3.4699 AC.
RETAIL:	20,078 S.F.	0.4609 AC.
BUILDING A:	142,041 S.F.	3.2608 AC.
TOTAL APARTMENT AREA (5 STORIES):	710,205 S.F.	16.3041 AC.
TOWNHOMES & LIVE/WORK UNITS:	180 EA.	
(includes 2 integral parking spaces per unit)		
BLOCK A		
16 TOWNHOMES	12,934 S.F.	0.2969 AC.
17 LIVE/WORK UNITS	17,600 S.F.	0.4040 AC.
BLOCK B		
57 TOWNHOMES	51,070 S.F.	1.1724 AC.
BLOCK C		
34 TOWNHOMES	34,350 S.F.	0.7886 AC.
BLOCK D		
56 TOWNHOMES	47,561 S.F.	1.0919 AC.
PUBLIC PARK AREA:		
AREA 1:	26,508 S.F.	0.6085 AC.
AREA 2:	26,200 S.F.	0.6015 AC.
AREA 3:	9,781 S.F.	0.2245 AC.
AREA 4:	3,249 S.F.	0.0746 AC.
AREA 5:	3,217 S.F.	0.0739 AC.
TOTAL:	68,955 S.F.	1.5830 AC.
PRIVATE GREEN SPACE:		
SPACE 1:	2,520 S.F.	0.0579 AC.
SPACE 2:	5,849 S.F.	0.1343 AC.
SPACE 3:	2,325 S.F.	0.0534 AC.
SPACE 4:	6,030 S.F.	0.1384 AC.
TOTAL:	16,724 S.F.	0.3839 AC.
PARKING:		
ON-STREET (8.5'x22.5'):	100 EA.	
HEAD-IN (9'x18'):	54 EA.	
RESIDENTIAL (2 PER UNIT):	360 EA.	
PARKING GARAGE:	600 EA.	
TOTAL:	1,114 EA.	
NEW PROPERTY LINE AREA :	703,197 S.F.	16.1432 AC.

EXHIBIT 2

Conceptual Site Plan - Sam's Club Site Redevelopment

Sam's Club Redevelopment - TIA

Kimley»Horn

II. EXISTING AND FUTURE AREA CONDITIONS

A. Roadway Characteristics

After consultation with City of Addison staff, the following existing intersections were selected to be part of this study:

- Surveyor Boulevard at Beltway Drive
- Surveyor Boulevard at Belt Line Road
- Belt Line Road at Runyon Road
- Belt Line Road at Northwest Drive (existing limited-access median opening)
- Belt Line Road at Northeast Drive (existing right-in/right-out access)
- Belt Line Road at Midway Road
- Belt Line Road at Beltway Drive
- Midway Road at Lindbergh Drive
- Midway Road at East Drive (existing full-access median opening)
- Midway Road at Beltway Drive
- Midway Road at Beltwood Parkway
- Midway Road at Proton Drive

The analysis also included new site driveways to Beltway Drive.

The major study area roadways are described below.

Belt Line Road – is a six-lane, divided major thoroughfare which runs east-west through the extents of Addison. In the project vicinity, Surveyor Boulevard, Runyon Road, Midway Road, and Beltway Drive all have signalized intersections with Belt Line Road. The speed limit adjacent to the site is 40 MPH.

Midway Road – is a six-lane, divided major thoroughfare which runs north-south through the extents of Addison. In the project vicinity, Lindbergh Drive, Belt Line Road, Beltway Drive, Beltwood Parkway, and Proton Drive all have signalized intersections with Midway Road. The speed limit adjacent to the site is 40 MPH. Midway Road operates as a coordinated signal corridor using 160-second cycle times in both AM and PM peak hours. The signal timing plans were developed by Kimley-Horn for the Town, and included coordinated operation along Belt Line Road between Runyon Road and Beltway Drive.

Beltway Drive – is a two-lane collector connecting residential and commercial properties to major thoroughfares, such as Belt Line Road and Midway Road. The speed limit is 30 MPH. The intersection with Surveyor Boulevard is all-way stop-controlled. There are also one or three proposed driveway access points adjoining this road. Finally, the intersection at Midway Road is signalized.

Exhibit 3 illustrates the intersection geometry used for the traffic analyses, for the basic site plan with only Drive 1 connecting to Beltway Drive.

B. Existing Study Area

The project site is currently an operational Sam's Club store located on the southwest corner of Belt Line Road and Midway Road. The site has three access points, one to Runyon Road and two to Midway Road. The Northwest Drive is a limited access median opening with channelized left-turns in both directions, and the Northeast Drive is right-in right-out.

The Sam's Club site is located about 400' west of the intersection on Belt Line Road and Midway Road. The four corners of this intersection are occupied by commercial and restaurant uses, with the rest of the area being completely built out.

C. Proposed Site Improvements

The proposed mixed-use redevelopment is planned to be redeveloped with 15,000 SF retail, 350 units of multi-family residential and 233 units of townhomes (including 10 live-work units). This site is planned to be completed by 2017.

The site would have access via a total of four driveways in 2017 and five in 2035 models. Three of those driveways would have access to Belt Line Road or Runyon Road, one would have access to Beltway Drive, and another on Midway Road. As noted, three of these intersections already exist as part of the existing site development. The driveways to be modeled in this analysis are as follows:

Runyon Road is the existing street intersection with Belt Line Road. Runyon Road turns east into the west side of the development, primarily providing access to the townhomes.

Northwest Drive is the existing limited access driveway to Belt Line Road, at a spacing of about 900' west of Midway Road. This limited access drive does not allow left-out turning movements. This is the primary access to the retail uses, and also has good access to the internal roadway network. A narrow, slow, one-way frontage road is proposed to parallel Belt Line Road, providing street parking for the retail uses and access to the multifamily garage. The operations of this internal connection are not specifically modeled.

Northeast Drive is the existing right-in/right-out driveway to Belt Line Road, at a spacing of about 400' west of Midway Road. This drive will allow direct access to the eastern part of the development.

East Drive is an existing full-access median opening on Midway Road, at a spacing of about 400' south of Belt Line Road. Currently the Sam's Club site does not have access to the East Drive, and this is assumed to continue in the 2017 study year. By 2035 the connection to the East Drive is assumed to be made, after later redevelopment of the hard corner parcels by others. In 2035 the East Drive median opening is assumed to be restricted to channelized left-turns inbound only, plus right-in/right-out movements.

Proposed Drive 1 is a new full access driveway to Beltway Drive, located just west of Midway Drive. This drive will allow direct access to the townhomes towards the rear of the development.

D. Existing Traffic Volumes

Weekday AM and PM peak hour turning movement counts were collected on June 30, 2015 at the major study intersections. Shorter counts were conducted at the intersection of Northeast Drive and Belt Line Road in the AM and PM peak hours as a part of site observations. 24-hour machine counts were also collected adjacent to the site on Belt Line Road (38,492 vehicles per day), Beltway Drive West of Midway Road (3,596 vpd), and Midway Road south of Belt Line Road (40,173 vpd). **Exhibit 4** shows the existing weekday AM and PM peak hour traffic volumes. The raw count sheets are provided in the **Appendix**, as well as a comparison between the 24-hour volumes collected and previous 24-hour counts. While taking counts during the school year would have been preferable, this was not possible due to the project timeline and the need to complete counts before the utility construction on Belt Line Road reached the project vicinity. A comparison was made to the historical counts collected in January and October 2014, and no discernable pattern of change was visible during the peak hour turning movement counts used for the operational analysis. In most cases, the 2015 counts were higher than previous counts in the most critical PM peak hour, so no modifications to the 2015 counts were applied.

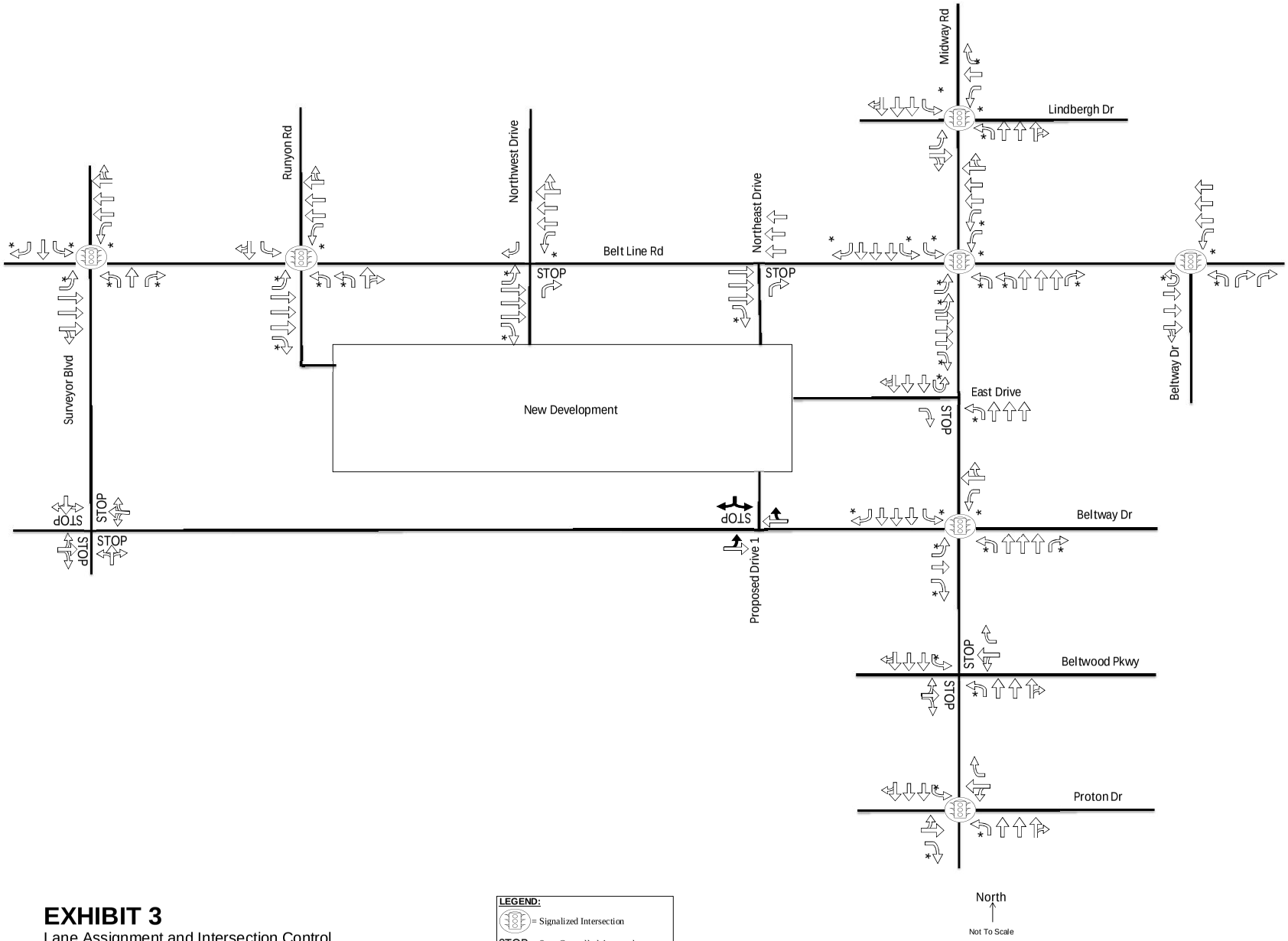

LEGEND:

= Signalized Intersection

STOP = Stop-Controlled Approach

= Travel Lane

* = Turn Bay

= Driveway Lanes or Off-Site Improvements

EXHIBIT 3

Lane Assignment and Intersection Control

Sam's Club Site Redevelopment - TIA

Kimley»Horn

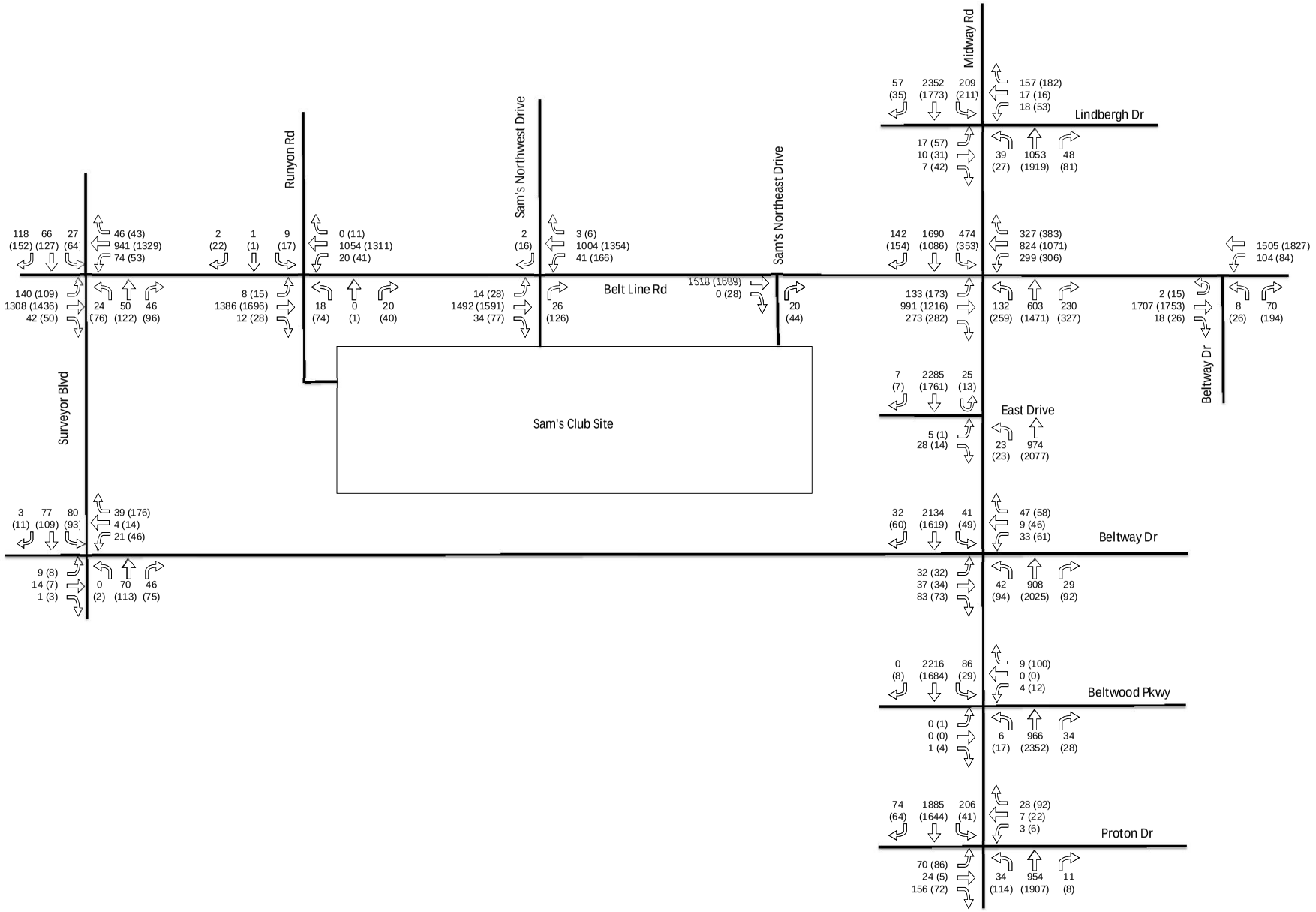

EXHIBIT 4

2015 Existing Traffic Volumes

Sam's Club Redevelopment - TIA

Kimley»Horn

III. PROJECT TRAFFIC CHARACTERISTICS

A. Site-Generated Traffic

Site-generated traffic estimates are determined through a process known as trip generation. Rates and equations are applied to the proposed land use to estimate traffic generated by the development during a specific time interval. The acknowledged source for trip generation rates is the 9th edition of *Trip Generation Manual* published by the Institute of Transportation Engineers (ITE). ITE has established trip rates in nationwide studies of similar land uses. The trips indicated are actually one-way trips or *trip ends*, where one vehicle entering and exiting the site is counted as one inbound trip and one outbound trip.

Reductions to the base trip generation estimates are sometimes applied due to internal capture or transit usage. Internal capture is the tendency for customers or residents to visit both the retail and the housing units in one trip, but be counted twice in the trip generation since the formula assumes the different uses are isolated. Internal capture reductions are applied based on the procedures in the current edition of the *Trip Generation Manual*. Internal capture reduces the number of trips leaving the site, and results in a projection of internal trips and external trips. Although some internal capture would happen, for conservative analysis purposes no internal capture reductions were applied.

Pass-by trips are existing vehicles on the adjacent roadways that choose to visit the new site, and then return to their original path. Pass-by trips do not reduce the driveway volumes projected for the site, but are deducted from the net new traffic added to the area roadways, since they are already present. With the housing units being more singular destinations rather than attracting spur-of-the-moment consumers, for a conservative analysis there was no pass-by trips assumed for the development.

Table 1 shows the resulting Daily, and weekday AM and PM peak hour trip generation for the proposed development. **Table 2** shows the weekday AM and PM peak hour trip generation for the existing Sam's Club. Trip generation for the existing Sam's Club was created using the ITE *Trip Generation Manual*. However, comparing ITE values with actual recorded volumes shows that the site appears to be generating traffic at a somewhat lower rate than the average would predict. All future scenarios were built upon the method developed in the ITE manual.

Table 1 - Trip Generation for Sam's Club Redevelopment Site

Redevelopment Uses	Amount	Units	ITE Code	Daily One Way Trips	AM Peak Hour One-Way Trips			PM Peak Hour One-Way Trips		
					IN	OUT	TOTAL	IN	OUT	TOTAL
Retail	15,000	SF	820	641	9	5	14	27	29	56
Multi-Family Units	350	Units	220	2,328	36	143	179	141	76	217
Fee-Simple Homes (Townhomes)	233	Units	230	1,354	18	85	103	81	40	121
Trip Generation Total:				4,323	63	233	296	249	145	394

Trip Generation based on ITE's *Trip Generation Manual, 9th Edition*.

Table 2 - Trip Generation for Sam's Club

Sam's Club ITE Prediction	Amount	Units	ITE Code	Daily One-Way Trips	AM Peak Hour One-Way Trips			PM Peak Hour One-Way Trips		
					IN	OUT	TOTAL	IN	OUT	TOTAL
Free-Standing Discount Superstore	138,000	SF	813	7,004	143	112	255	294	306	600

Trip Generation based on ITE's *Trip Generation Manual, 9th Edition*.

B. Development of 2015 Reduced Existing Traffic Volumes

The existing traffic shown in **Exhibit 4** are the actual turning movement counts before removing the Sam's Club traffic. Currently Runyon Road, Northwest Drive, and Northeast Drive can be accessed by customers of neighboring businesses which includes Raising Cane's Chicken Fingers and Taqueria La Ventana. In order to account for traffic associated only with the Sam's Club and not with the neighboring businesses, parts of the existing traffic volumes going in to and out of the Northwest and Northeast drives were assumed to be "Sam's Club traffic". Since the restaurants were not open in the AM peak hour, all the driveway traffic was assumed to be Sam's Club traffic in that time period. In the PM peak hour, two-thirds of the existing traffic was assumed to be Sam's Club traffic. Since Runyon Road serves other users, no attempt was made to identify Sam's Club traffic there. With only counting parts of the Northwest Drive and Northeast Drive existing traffic as Sam's Club traffic, and not counting Runyon Road, this procedure ensures that the reductions will be smaller than the actual Sam's Club traffic, for a conservative analysis.

Due to the site of the Sam's Club is being redeveloped, the Sam's Club traffic needs to be taken out of consideration for future scenarios. The Sam's Club traffic was followed through to nearby intersections to the site and subtracted out based on proportions of existing volumes. For example, proportions of turning movements at an intersection gave the most probable paths taken by Sam's Club visitors. Once this procedure had been followed through and all of the Sam's Club traffic had been taken out of the existing volumes, a new set of volumes referred to as the 2015 "reduced existing" volumes had been created, which would be used as the starting point for the background traffic growth assumptions.

C. Trip Distribution and Assignment

The distribution of the site-generated traffic volumes into and out of the site driveways and onto the street system was based on the area street system characteristics, existing traffic patterns, relative residential density, and the locations of the proposed driveway access to/from the site. **Table 3** displays the general directional distribution percentages assumed for the site.

Table 3 - General Directional Distribution

Direction	Residential Percent To/From
North (via Midway)	15%
East (via Belt Line)	30%
South (via Midway)	40%
West (via Belt Line)	10%
West (via Beltway)	5%

The corresponding inbound and outbound traffic assignment percentages, where the directional distribution in **Table 3** is applied using the most probable paths to and from the site, can be found in **Exhibits 5** and **6**. **Exhibit 5** displays distribution percentages for the 2017 scenario where the East Drive does not have a direct connection in to and out of the new development, while **Exhibit 6** displays distribution percentages for the 2035 scenario with the East Drive connection to the site.

Exhibits 7 and **8** show the subsequent site-generated weekday AM and weekday PM peak hour turning movements for the 2017 and 2035 conditions, respectively. These volumes are obtained by multiplying the trip generation by the traffic assignment percentages.

D. Development of 2017 Background Traffic

In order to obtain 2017 background traffic, the existing traffic counts and historic counts near the site were compared to find expected growth trends within the study area. The historical records show little to no actual growth on the major thoroughfares in the past decade. Both Midway Road and Belt Line Road handle significantly less traffic than they did in the 1990s and 2000s. In the last four years which would indicate a short-term trend, Belt Line Road was growing at 0.2% annual growth, and Midway Road was still shrinking at -0.6% annual growth. To assume some growth in the area despite the lack of recent change, an annual growth rate of 2% was assumed for the background traffic. To find the 2017 background traffic, the reduced existing 2015 traffic counts were grown by 2% annually for two years. As described earlier, the reduced existing 2015 counts are the 2015 counts with the Sam's Club traffic removed.

The resulting 2017 background weekday AM and PM peak hour traffic volumes are shown in **Exhibit 9**.

E. Development of 2017 Total Traffic

Site traffic volumes were added to the background volumes to represent the estimated total (background plus site-generated) traffic conditions for the 2017 study year after completion of the proposed development. The site traffic volumes are made up of the new site-generated trips. **Exhibit 10** shows the resulting 2017 weekday AM and PM peak hour total traffic volumes.

F. Development of 2035 Background and Total Traffic

The background and total traffic volumes in the 2035 study year were calculated with 18 years of 0.5% growth over the 2017 background traffic volumes. The 0.5% growth is a

standard rate used for long-term growth when there is not a clear growth signal from the historical counts. Combined with the 2% growth assumed from 2015 to 2017, this assumed growth through 2035 represents a 14% increase over the 2015 volumes, which is reasonable for an established area. **Exhibit 11** shows the resulting 2035 weekday AM and PM peak hour background traffic volumes, and **Exhibit 12** shows the resulting 2035 weekday AM and PM peak hour total traffic volumes after the addition of the site-generated traffic.

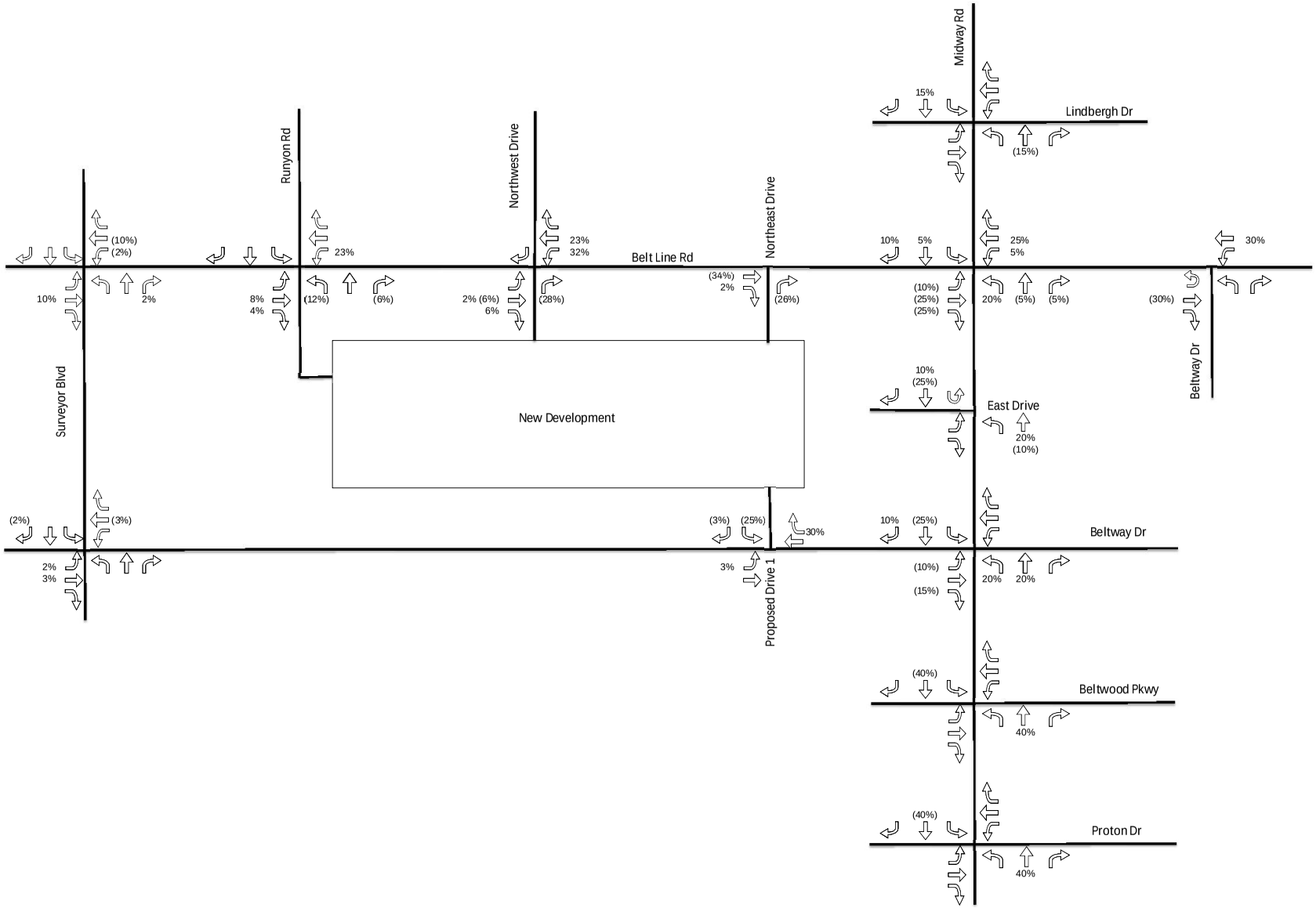

LEGEND:
X%(Y%)
X% = Percentage of Inbound Site-Generated Traffic
Y% = Percentage of Outbound Site-Generated Traffic

EXHIBIT 5

Trip Distribution and Traffic Assignment - 2017

Sam's Club Redevelopment - TIA

Kimley»Horn

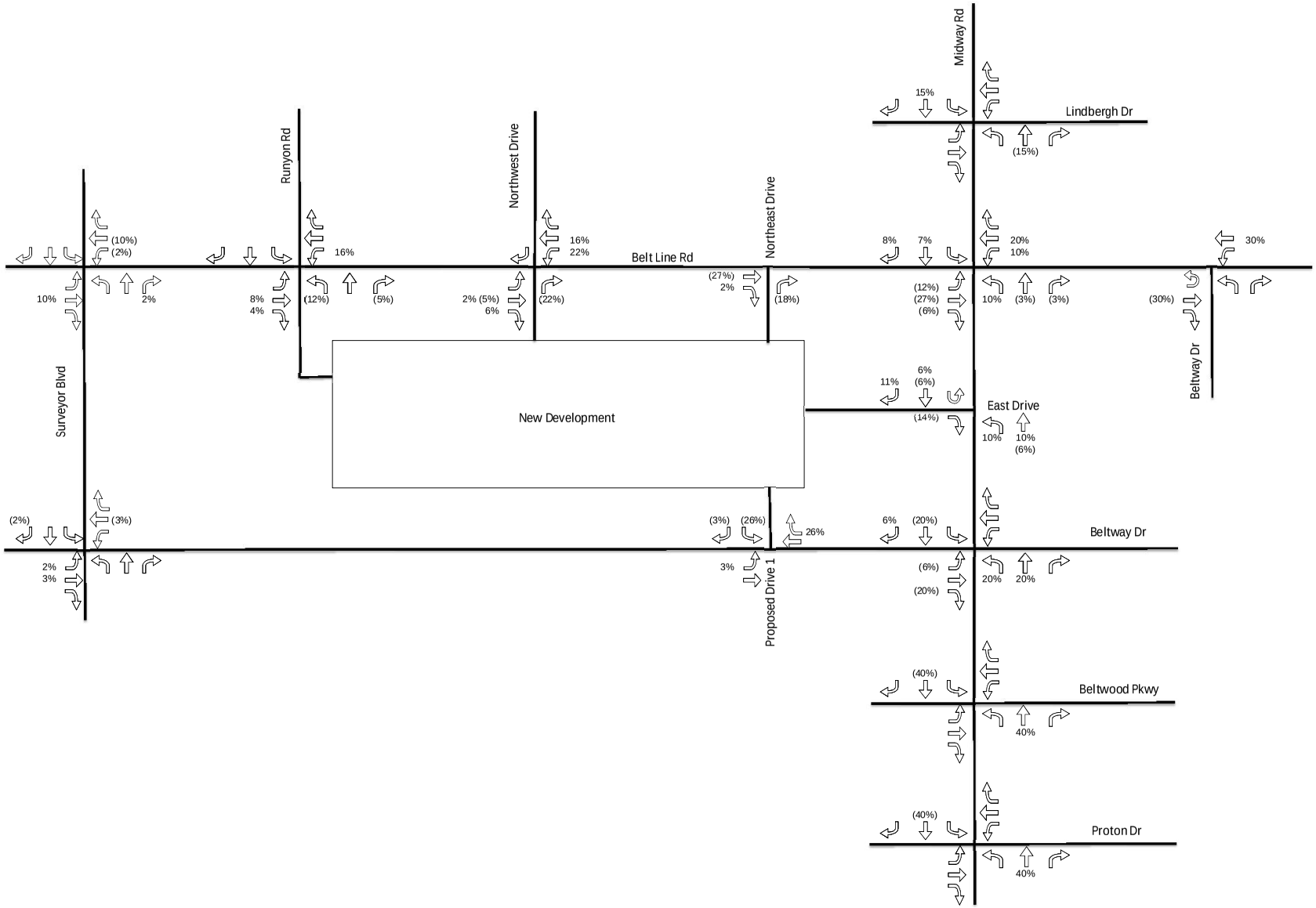

LEGEND:
X%(Y%)
X% = Percentage of Inbound Site-Generated Traffic
Y% = Percentage of Outbound Site-Generated Traffic

North
Not To Scale

EXHIBIT 6

Trip Distribution and Traffic Assignment - 2035

Sam's Club Redevelopment - TIA

Kimley»Horn

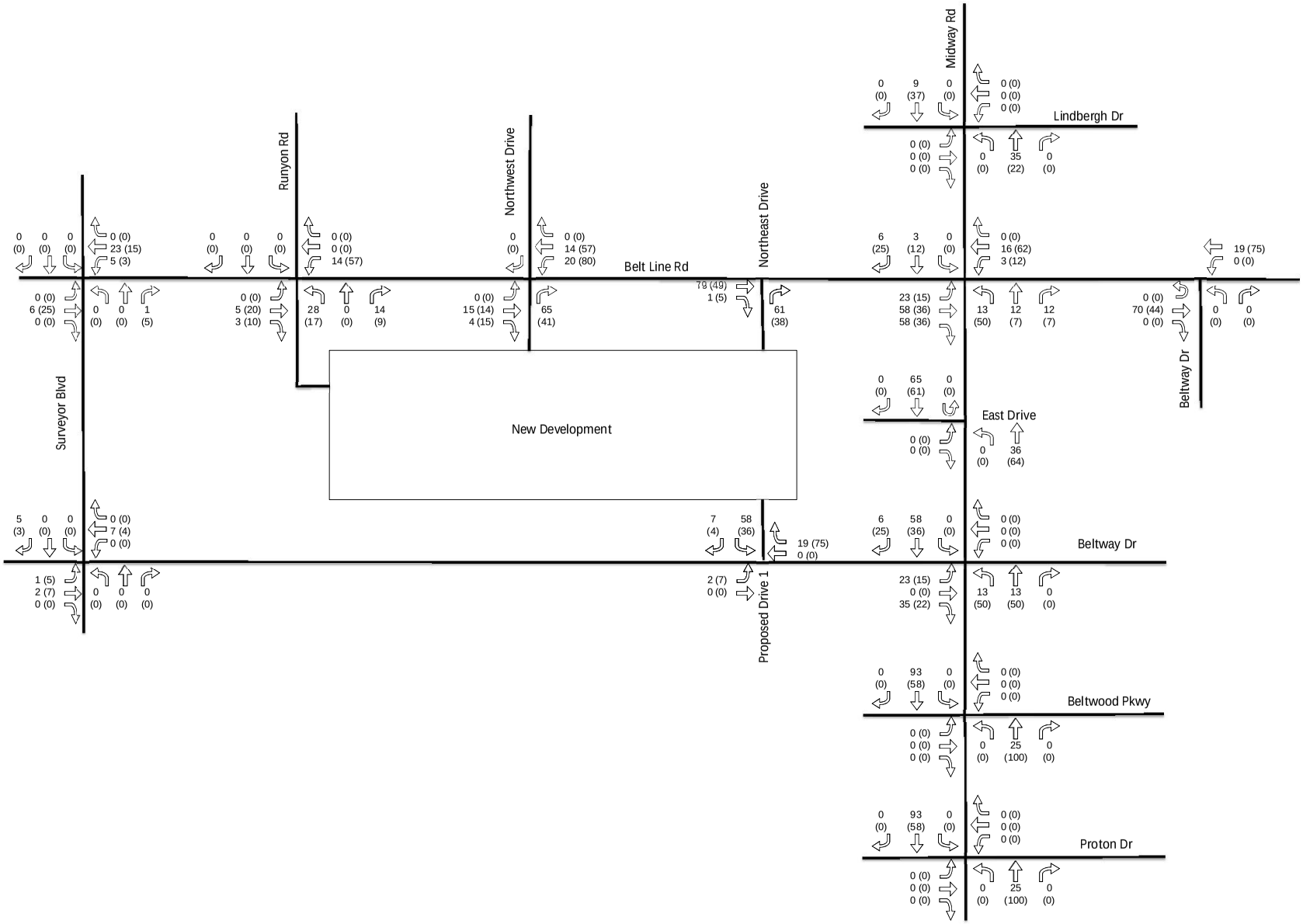

LEGEND:
X (Y)
X = Weekday AM Peak Hour Turning Movements
Y = Weekday PM Peak Hour Turning Movements
Volumes may not sum from point to point due to rounding
and presence of smaller driveways not included in analysis.

North
Not To Scale

EXHIBIT 7

Site-Generated Traffic Volumes - 2017

Sam's Club Redevelopment - TIA

Kimley»Horn

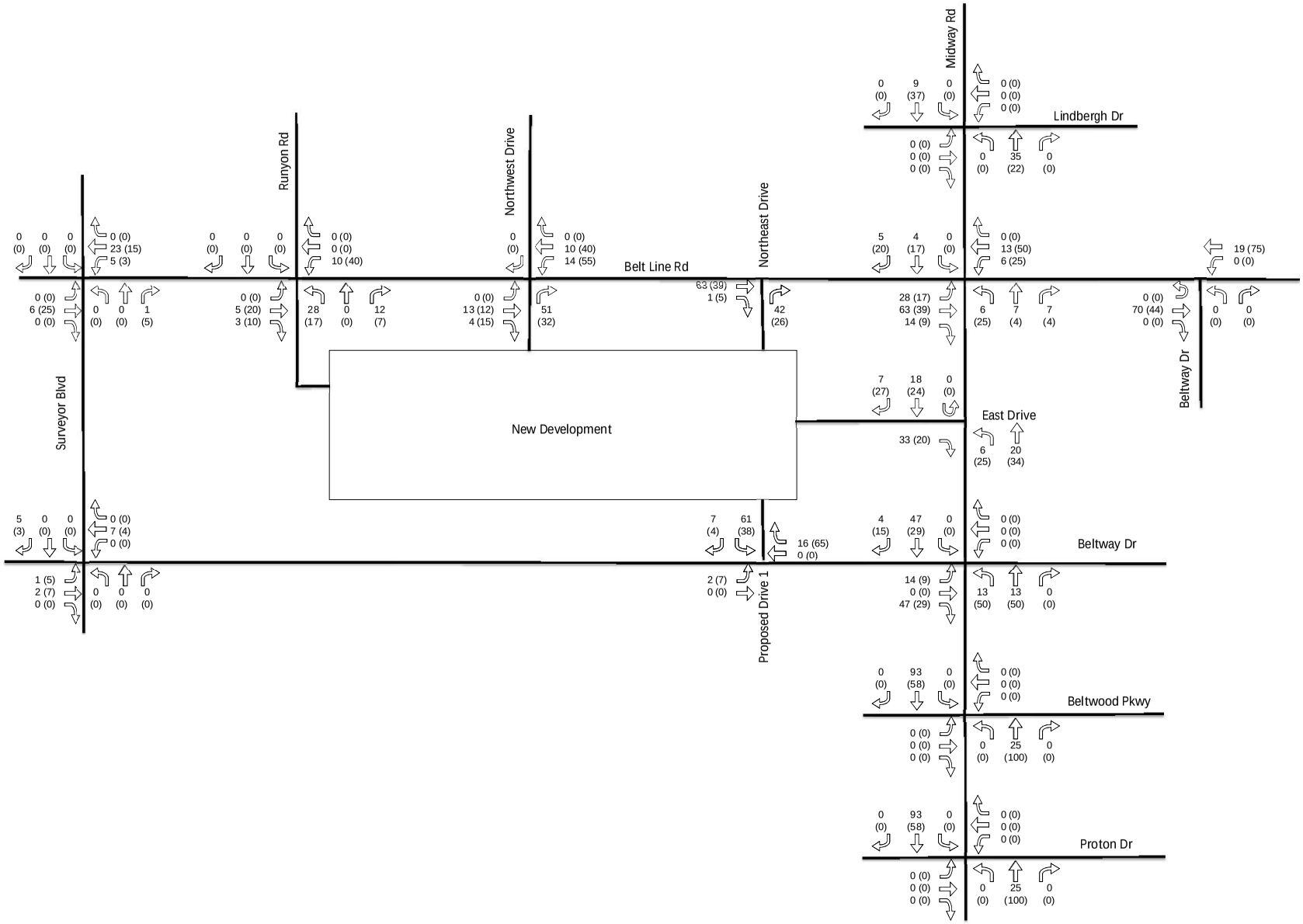

LEGEND:
X (Y)
X = Weekday AM Peak Hour Turning Movements
Y = Weekday PM Peak Hour Turning Movements
Volumes may not sum from point to point due to rounding
and presence of smaller driveways not included in analysis.

North
Not To Scale

EXHIBIT 8

Site-Generated Traffic Volumes - 2035

Sam's Club Redevelopment - TIA

Kimley»Horn

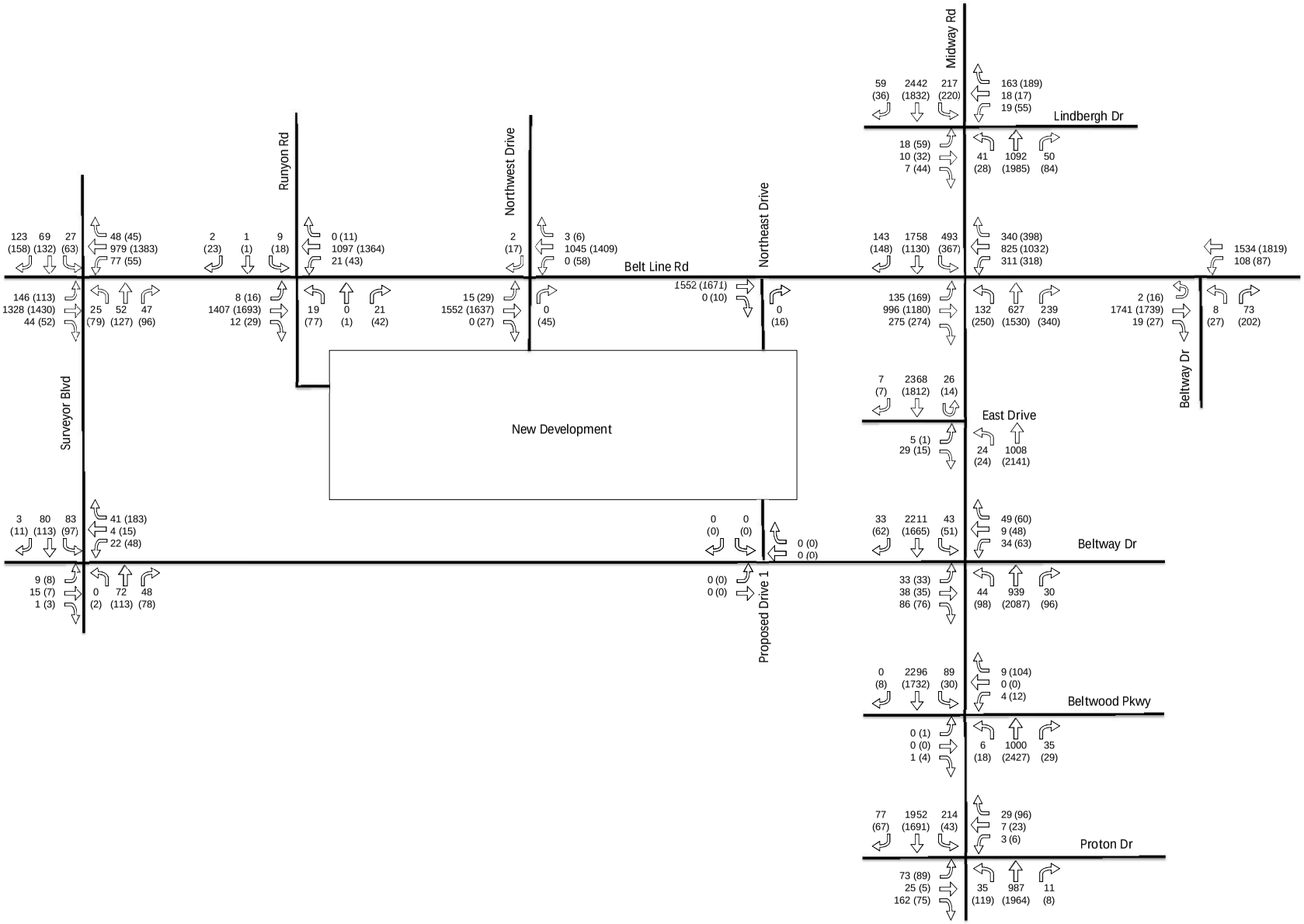

LEGEND:
X (Y)
X = Weekday AM Peak Hour Turning Movements
Y = Weekday PM Peak Hour Turning Movements
Volumes may not sum from point to point due to rounding
and presence of smaller driveways not included in analysis.

North
Not To Scale

EXHIBIT 9

2017 Background Traffic Volumes

Sam's Club Redevelopment - TIA

Kimley»Horn

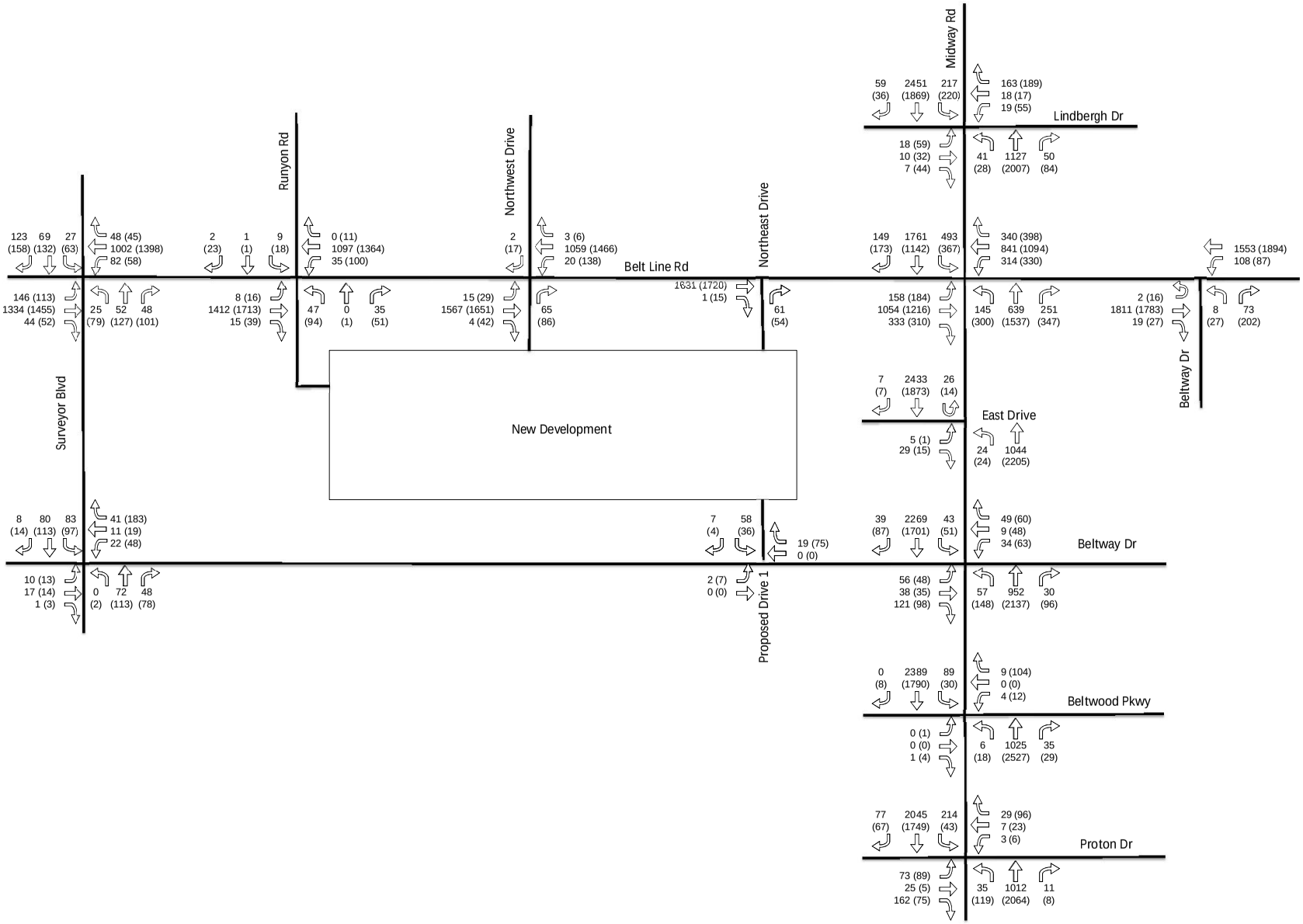

LEGEND:
X (Y)
X = Weekday AM Peak Hour Turning Movements
Y = Weekday PM Peak Hour Turning Movements
Volumes may not sum from point to point due to rounding
and presence of smaller driveways not included in analysis.

North
Not To Scale

EXHIBIT 10

2017 Background Plus Site-Generated Traffic Volumes

Sam's Club Redevelopment - TIA

Kimley»Horn

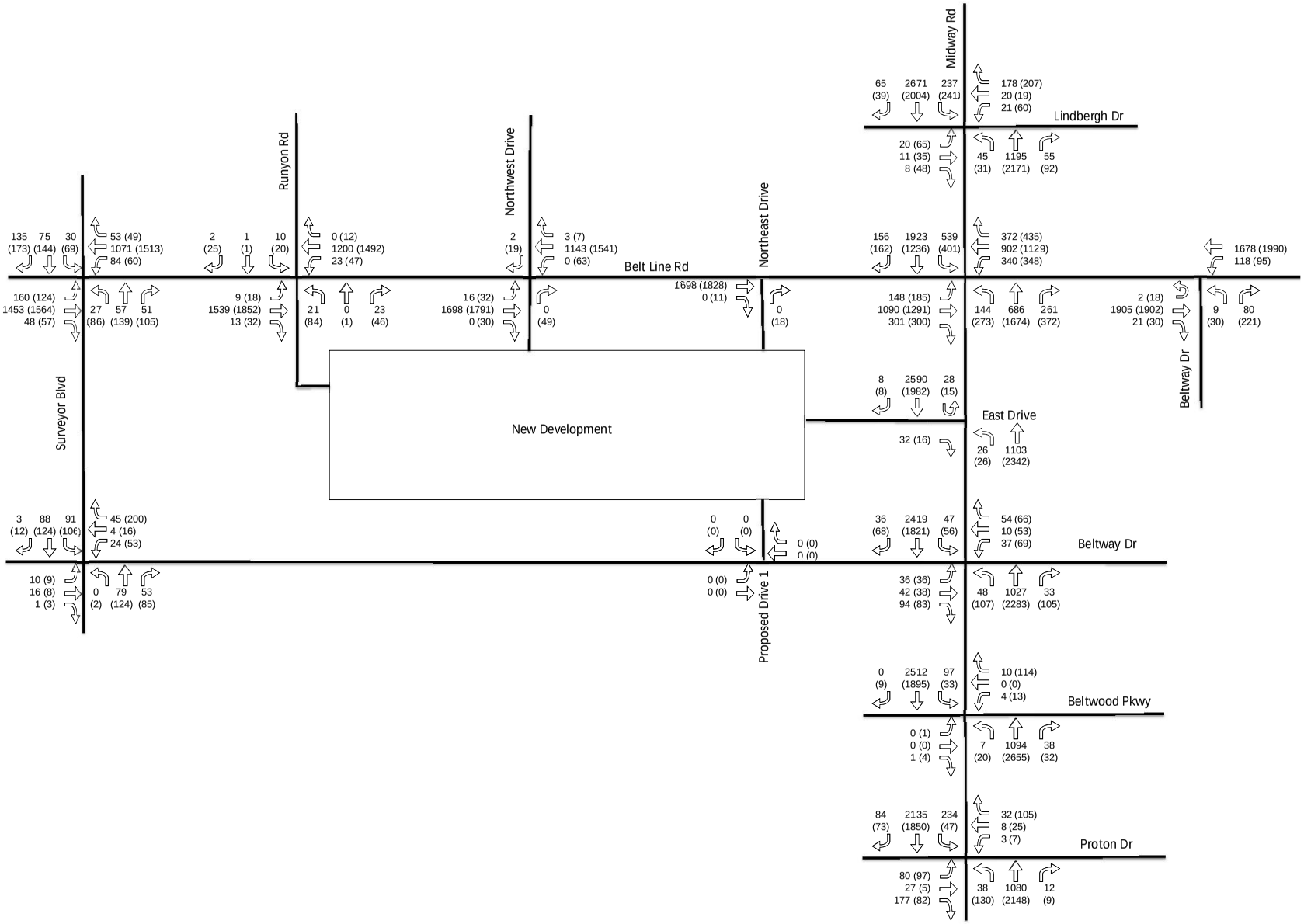

LEGEND:
X (Y)
X = Weekday AM Peak Hour Turning Movements
Y = Weekday PM Peak Hour Turning Movements
Volumes may not sum from point to point due to rounding and presence of smaller driveways not included in analysis.

EXHIBIT 11

2035 Background Traffic Volumes

Sam's Club Redevelopment - TIA

Kimley»Horn

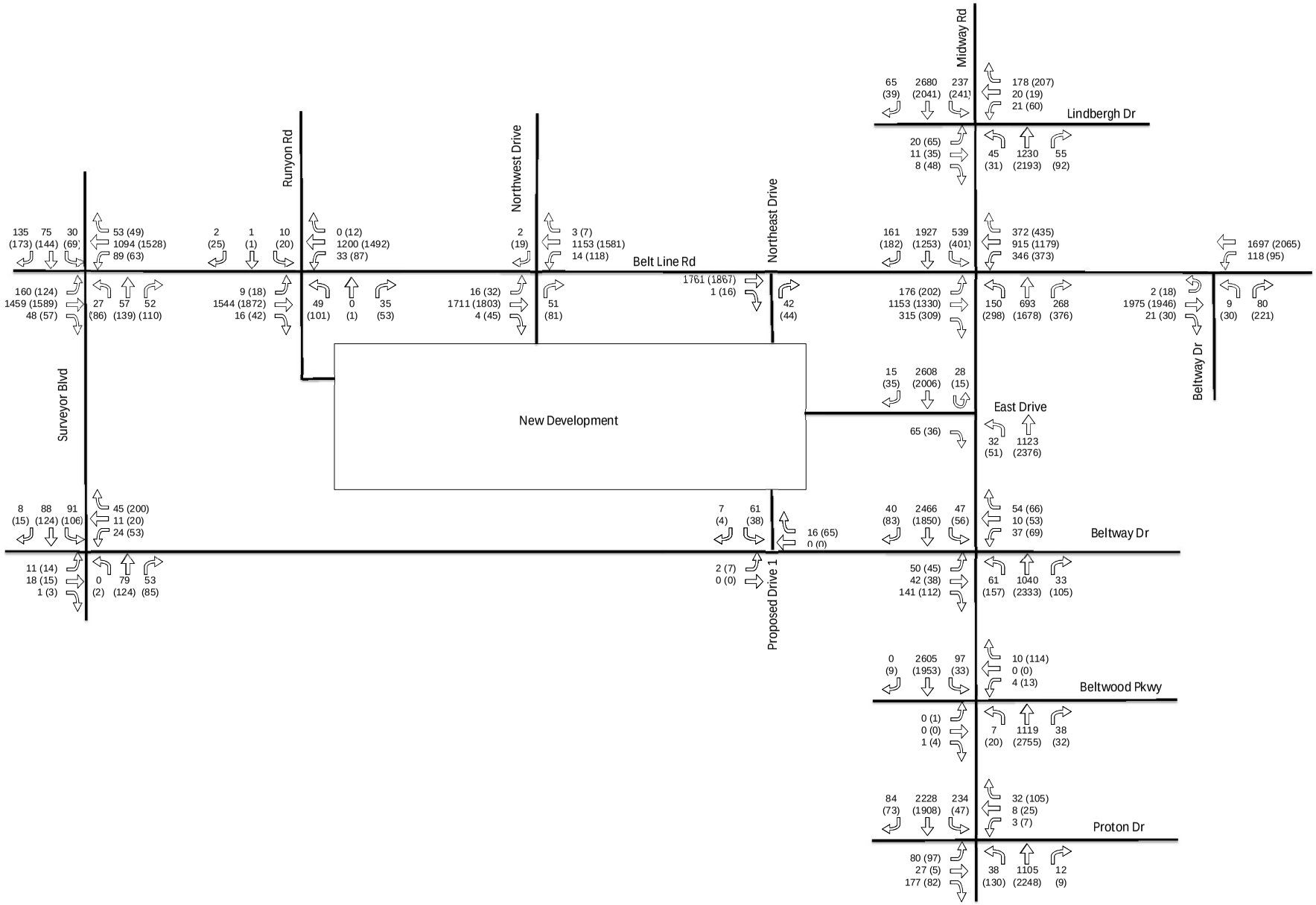

LEGEND:
X (Y)
X = Weekday AM Peak Hour Turning Movements
Y = Weekday PM Peak Hour Turning Movements
Volumes may not sum from point to point due to rounding
and presence of smaller driveways not included in analysis.

North
Not To Scale

EXHIBIT 12

2035 Background Plus Site-Generated Traffic Volumes

Sam's Club Redevelopment - TIA

Kimley»Horn

IV. TRAFFIC OPERATIONS ANALYSIS

Kimley-Horn conducted a traffic operations analysis to determine potential capacity deficiencies in the 2015, 2017, and 2035 study years at the study intersections. The acknowledged source for determining overall capacity is the current edition of the *Highway Capacity Manual.*

A. Analysis Methodology

Capacity analysis results are listed in terms of Level of Service (LOS). LOS is a qualitative term describing operating conditions a driver will experience while traveling on a particular street or highway during a specific time interval. It ranges from A (very little delay) to F (long delays and congestion). **Table 4** shows the definition of level of service for signalized and unsignalized intersections.

Table 4 – Level of Service Definitions

Level of Service	Signalized Intersection Average Total Delay (sec/veh)	Unsignalized Intersection Average Total Delay (sec/veh)
A	≤10	≤10
B	>10 and ≤20	>10 and ≤15
C	>20 and ≤35	>15 and ≤25
D	>35 and ≤55	>25 and ≤35
E	>55 and ≤80	>35 and ≤50
F	>80	>50

Definitions provided from the Highway Capacity Manual, Special Report 209, Transportation Research Board, 2010.

Study area intersections were analyzed based on average total delay analysis for signalized and unsignalized intersections. For the unsignalized analysis, the level of service (LOS) for a two-way stop controlled intersection is defined for each movement. Unlike signalized intersections which define LOS for each approach and for the intersection as a whole, LOS for two-way stop-controlled intersections is not defined as a whole.

The analyses assumed the lane geometry and intersection control shown in **Exhibit 3**.

The signal operations for the 2015 existing scenario are taken directly from the existing signal timing produced during the recent Kimley-Horn signal timing projects on behalf of the Town. Signal operations for the seven signalized intersections included within the site area were checked during a field visit on July 7, 2015. The signal operations were not modified for the future scenarios.

B. Analysis Results

Tables 5 and **6** show the intersection operational results for the weekday AM and PM peak hours, respectively.

Table 5 – Traffic Operational Results – Weekday AM Peak Hour

INTERSECTION	APPROACH	2015 Existing Traffic AM Peak Hour		2017 Background Traffic AM Peak Hour		2017 Background Plus Site Traffic AM Peak Hour		2035 Background Traffic AM Peak Hour		2035 Background Plus Site Traffic AM Peak Hour	
		DELAY (SEC/VEH)	LOS	DELAY (SEC/VEH)	LOS	DELAY (SEC/VEH)	LOS	DELAY (SEC/VEH)	LOS	DELAY (SEC/VEH)	LOS
Midway Road @ Lindbergh Drive	EB	47.7	D	47.4	D	47.4	D	46.9	D	46.9	D
	WB	58.7	E	59.6	E	59.6	E	61.5	E	61.5	E
	NB	1.8	A	2.0	A	2.0	A	2.4	A	2.4	A
	SB	18.1	B	20.2	C	20.3	C	28.4	C	28.8	C
	Overall	**16.3**	**B**	**17.9**	**B**	**17.9**	**B**	**23.7**	**C**	**23.8**	**C**
Belt Line Road @ Beltway Drive	EB	4.2	A	4.4	A	4.8	A	5.2	A	5.3	A
	WB	5.7	A	5.8	A	5.5	A	6.1	A	6.1	A
	NB	59.7	E	59.9	E	59.9	E	60.5	E	60.5	E
	Overall	**6.4**	**A**	**6.6**	**A**	**6.6**	**A**	**7.1**	**A**	**7.1**	**A**
Midway Road @ Belt Line Road	EB	46.7	D	47.3	D	60.6	E	52.9	D	65.1	E
	WB	50.9	D	51.4	D	51.7	D	53.8	D	54.2	D
	NB	29.5	C	29.3	C	30.5	C	29.9	C	30.4	C
	SB	27.6	C	30.4	C	30.4	C	42.1	D	42.4	D
	Overall	**38.2**	**D**	**39.4**	**D**	**43.3**	**D**	**46.0**	**D**	**49.5**	**D**
Midway Road @ Beltway Drive	EB	51.1	D	51.2	D	49.7	D	51.3	D	50.6	D
	WB	50.3	D	50.3	D	51.2	D	50.4	D	49.5	D
	NB	0.3	A	0.3	A	0.5	A	0.4	A	0.5	A
	SB	0.8	A	0.9	A	1.1	A	1.2	A	1.7	A
	Overall	**5.0**	**A**	**5.1**	**A**	**6.0**	**A**	**5.3**	**A**	**6.3**	**A**
Midway Road @ Proton Drive	EB	53.4	D	53.4	D	53.4	D	53.5	D	53.5	D
	WB	55.8	E	55.7	E	55.7	E	55.5	E	55.5	E
	NB	9.6	A	10.2	B	10.3	B	11.9	B	12.0	B
	SB	2.0	A	2.3	A	2.5	A	3.3	A	3.7	A
	Overall	**8.8**	**A**	**9.1**	**A**	**9.1**	**A**	**10.2**	**B**	**10.4**	**B**
Belt Line Road @ Runyon Road	EB	0.2	A	0.2	A	0.3	A	0.3	A	0.3	A
	WB	0.2	A	0.2	A	0.3	A	0.3	A	0.3	A
	NB	54.0	D	54.0	D	52.3	D	54.0	D	52.2	D
	SB	51.0	D	51.0	D	51.5	D	50.9	D	51.4	D
	Overall	**2.0**	**A**	**2.0**	**A**	**3.1**	**A**	**2.0**	**A**	**3.0**	**A**
Belt Line Road @ Surveyor Boulevard	EB	12.4	B	13.6	B	14.0	B	17.7	B	18.4	B
	WB	10.5	B	11.0	B	12.7	B	11.6	B	13.3	B
	NB	19.0	B	19.1	B	18.9	B	18.9	B	18.8	B
	SB	17.6	B	18.3	B	18.3	B	20.6	C	20.6	C
	Overall	**12.4**	**B**	**13.3**	**B**	**14.1**	**B**	**15.8**	**B**	**16.7**	**B**
Belt Line Road @ Northeast Drive	NBR*	19.4	C	0.0	A	24.8	C	0.0	A	25.4	D
Belt Line Road @ Northwest Drive	EBL	15.7	C	16.3	C	16.5	C	17.9	C	18.0	C
	WBL	29.0	D	0.0	A	28.2	D	0.0	A	32.3	D
	NBR*	19.5	C	0.0	A	23.9	C	0.0	A	25.4	D
	SBR*	13.8	B	14.1	B	14.2	B	14.8	B	14.9	B
Midway Road @ East Drive	EB*	108.7	F	150.7	F	183.8	F	52.8	F	88.1	F
	NBL	82.6	F	97.7	F	110.3	F	161.5	F	200+	F
Midway Road @ Beltwood Parkway	EBL*	29.0	D	30.7	D	32.7	D	35.8	E	38.4	E
	WB*	82.3	F	93.6	F	105.9	F	145.9	F	163.9	F
	NBL	56.0	F	61.6	F	69.8	F	84.0	F	98.2	F
	SBL	18.7	C	19.7	C	20.4	C	23.1	C	24.0	C
Beltway Drive @ Proposed Drive 1	EBL	-	-	-	-	7.3	A	-	-	7.3	A
	SB*	-	-	-	-	8.8	A	-	-	8.8	A
Surveyor Boulevard @ Beltway Drive	EB*	7.9	A	7.9	A	8.0	A	8.0	A	8.1	A
	WB*	7.7	A	7.8	A	7.9	A	7.9	A	8.0	A
	NB*	7.8	A	7.8	A	7.9	A	8.0	A	8.1	A
	SB*	8.5	A	8.6	A	8.7	A	8.8	A	8.9	A

* Stop-Controlled Approach - No movements in Time Period

Blue cells are unsignalized intersections.

Table 6 – Traffic Operational Results – Weekday PM Peak Hour

INTERSECTION	APPROACH	2015 Existing Traffic PM Peak Hour		2017 Background Traffic PM Peak Hour		2017 Background Plus Site Traffic PM Peak Hour		2035 Background Traffic PM Peak Hour		2035 Background Plus Site Traffic PM Peak Hour	
		DELAY (SEC/VEH)	LOS	DELAY (SEC/VEH)	LOS	DELAY (SEC/VEH)	LOS	DELAY (SEC/VEH)	LOS	DELAY (SEC/VEH)	LOS
Midway Road @ Lindbergh Drive	EB	50.5	D	50.4	D	50.4	D	52.2	D	52.3	D
	WB	63.1	E	64.0	E	64.0	E	71.0	E	71.2	E
	NB	2.2	A	2.7	A	2.8	A	4.8	A	5.1	A
	SB	19.5	B	21.3	C	21.6	C	26.6	C	27.1	C
	Overall	**16.3**	**B**	**17.4**	**B**	**17.6**	**B**	**21.4**	**C**	**21.7**	**C**
Belt Line Road @ Beltway Drive	EB	6.0	A	6.2	A	6.4	A	7.4	A	7.5	A
	WB	5.6	A	5.8	A	5.8	A	6.3	A	6.3	A
	NB	58.9	E	59.1	E	59.1	E	59.5	E	59.6	E
	Overall	**9.3**	**A**	**9.7**	**A**	**9.6**	**A**	**10.4**	**B**	**10.4**	**B**
Midway Road @ Belt Line Road	EB	44.5	D	43.9	D	45.8	D	46.1	D	47.9	D
	WB	63.6	E	63.3	E	66.6	E	72.6	E	78.7	E
	NB	30.2	C	48.1	D	49.1	D	55.8	E	56.3	E
	SB	45.5	D	47.8	D	47.9	D	56.2	E	56.7	E
	Overall	**45.9**	**D**	**50.8**	**D**	**52.5**	**D**	**57.7**	**E**	**60.0**	**E**
Midway Road @ Beltway Drive	EB	50.8	D	50.8	D	50.3	D	50.9	D	51.4	D
	WB	49.4	D	49.5	D	50.7	D	49.4	D	49.7	D
	NB	11.0	B	11.5	B	12.7	B	23.4	C	24.9	C
	SB	0.7	A	0.8	A	0.9	A	1.2	A	1.4	A
	Overall	**10.1**	**B**	**10.4**	**B**	**11.4**	**B**	**16.3**	**B**	**17.5**	**B**
Midway Road @ Proton Drive	EB	46.2	D	46.1	D	46.1	D	45.9	D	45.9	D
	WB	60.6	E	60.8	E	60.8	E	61.2	E	61.2	E
	NB	12.2	B	12.9	B	13.5	B	15.4	B	15.6	B
	SB	4.4	A	4.8	A	5.0	A	6.3	A	2.4	A
	Overall	**11.5**	**B**	**12.1**	**B**	**12.4**	**B**	**13.9**	**B**	**12.2**	**B**
Belt Line Road @ Runyon Road	EB	0.4	A	0.4	A	2.0	A	0.4	A	2.2	A
	WB	0.7	A	0.7	A	1.2	A	0.9	A	1.2	A
	NB	51.2	D	51.2	D	51.7	D	51.2	D	51.3	D
	SB	54.1	D	53.9	D	54.7	D	53.8	D	54.6	D
	Overall	**4.1**	**A**	**4.3**	**A**	**5.7**	**A**	**4.3**	**A**	**5.7**	**A**
Belt Line Road @ Surveyor Boulevard	EB	15.3	B	16.8	B	17.2	B	24.1	C	24.6	C
	WB	10.9	B	11.3	B	12.0	B	12.5	B	13.3	B
	NB	26.6	C	27.6	C	27.3	C	29.3	C	29.1	C
	SB	24.3	C	24.3	C	24.3	C	24.5	C	24.5	C
	Overall	**15.5**	**B**	**16.3**	**B**	**16.7**	**B**	**20.0**	**B**	**20.5**	**C**
Belt Line Road @ Northeast Drive	NBR*	24.2	C	21.2	C	26.1	D	23.9	C	28.1	D
Belt Line Road @ Northwest Drive	EBL	23.2	C	24.8	C	26.5	D	29.6	D	31.2	D
	WBL	139.2	F	40.7	E	113.8	F	57.8	F	137.9	F
	NBR*	34.4	D	23.3	C	28.8	D	27.0	D	33.1	D
	SBR*	17.3	C	18.0	C	18.7	C	19.8	C	20.3	C
Midway Road @ East Drive	EB*	32.9	D	35.1	E	38.1	E	26.7	D	31.4	D
	NBL	37.1	E	40.2	E	43.6	E	52.7	F	83.0	F
Midway Road @ Beltwood Parkway	EBL*	200+	F	200+	F	200+	F	200+	F	+	F
	WB*	200+	F	200+	F	200+	F	200+	F	89.4	F
	NBL	32.1	D	34.4	D	37.0	E	43.5	E	47.0	E
	SBL	112.2	F	135.5	F	163.8	F	200+	F	200+	F
Beltway Drive @ Proposed Drive 1	EBL	-	-	-	-	7.4	A	-	-	7.4	A
	SB*	-	-	-	-	8.9	A	-	-	8.9	A
Surveyor Boulevard @ Beltway Drive	EB*	8.5	A	8.6	A	8.8	A	8.8	A	9.0	A
	WB*	9.9	A	10.1	B	10.3	B	10.8	B	11.0	B
	NB*	9.4	A	9.5	A	9.6	A	10.0	A	10.1	B
	SB*	10.2	B	10.4	B	10.6	B	11.1	B	11.2	B

* Stop-Controlled Approach - No movements in Time Period

Blue cells are unsignalized intersections.

C. 2015 Existing Traffic Operations

The analysis of the 2015 existing traffic operations shows that the signalized intersection at Midway Road and Belt Line Road operates at LOS D for both the AM and PM peaks. The other signalized intersections operate at LOS A or B in both time periods. The coordinated north-south thoroughfare movements on Midway Road and east-west thoroughfare movements on Belt Line Road usually operate at LOS A or B while the minor-street approaches experience more delay.

Due to the heavy volumes on Belt Line Road and Midway Road, the unsignalized intersections show the expected heavy delays for left-turn movements, with some operating well into LOS F ranges. These conditions are normal for stop-controlled intersections with major arterials, and the existing traffic volumes marking the turns show that they still function at acceptable levels. The more minor intersection of Surveyor Boulevard at Beltway Drive operates with all movements at LOS A or B during both the AM and PM peaks.

D. 2017 Background Traffic Operations

The addition of two years of background growth adds some delay to the signalized intersections, but all signalized intersections maintain their overall LOS. All signalized intersections remain at LOS B or better, except for Midway Road at Belt Line Road which remains at LOS D.

The unsignalized approaches see additional delay where there was background traffic growth. The westbound left and northbound right turns of the Northwest Drive show reduced delay since the existing Sam's Club traffic volumes were removed.

E. 2017 Background Plus Site-Generated Traffic Operations

The addition of the site-generated traffic to the 2017 background traffic results increased delay at some of the signalized intersections, but they all maintain their LOS. Belt Line Road at Midway Road continues to operate at overall LOS D.

The new Proposed Drive 1 operates at LOS A for both eastbound left-turns into the site and southbound movements in either direction out of the site. The intersection of Surveyor Boulevard at Beltway Drive continues to operate at the same excellent LOS as in the background scenario. Most of the movements into and out of the new development on the Northwest Drive became one LOS lower during the PM peak, but the conditions remain the same or better than those of the 2015 existing scenario with the Sam's Club traffic. With drivers being conditioned to accept delays when entering major arterials, these conditions remain acceptable for access to and from the road network. There is sufficient capacity in Proposed Drive 1 that drivers who are more sensitive to delay could change their path if they feel it necessary.

F. 2035 Background Traffic Operations

Eighteen additional years of background growth is a jump in the background traffic volumes, and there is a corresponding increase in signalized intersection delays. The Lindbergh Drive and Proton Drive intersections fall to LOS C and B respectively in the AM peak hour. Lindbergh Drive, Beltway Drive at Belt Line Road, and Midway Road at

Belt Line Road fall to LOS C, B, and E respectively in the PM peak hour. The other signalized intersections remain at LOS A or B in both peak hours.

In this scenario, the East Drive connects to the development, and eastbound left turn movements are not allowed from the East Drive. Due to the removal of the very difficult left-turning movements, the eastbound approach delay is reduced compared to 2017.

G. 2035 Background Plus Site-Generated Traffic Operations

The addition of the site-generated traffic to the 2035 background traffic results in small increased delays at most signalized intersection, with one change in LOS from LOS B to C on Surveyor Boulevard at Belt Line Road in the PM peak hour due to a half second increase in overall delay.

Proposed Drive 1 continues to operate with favorable LOS A conditions in all directions. The northbound right-turn movement on the Northeast Drive increased in delay and moved down from LOS C to D in the PM peak hour. The East Drive continues to operate at LOS D or F, and the Northwest Drive shows LOS D or F for movements into and out of the development. Comparing to the existing 2015 conditions, these results show that the proposed site's impact on the roadway networks is at most one level lower in LOS for any intersection.

H. Proposed Drive 1 at Beltway Drive Stop-Sign Control

The current configuration has southbound Proposed Drive 1 as stop-controlled, while the east/westbound Beltway Drive approach does not stop. The above intersection results show that the two-way stop control of southbound Proposed Drive 1 continues to operate with excellent conditions and minimal delays or queuing through 2035.

I. Internal Roadway Intersections

As a walkable mixed-use development, the site's internal roadways should be designed to be as narrow as possible, slowing vehicle traffic and making pedestrian crossings shorter. Similarly, the intersections should be kept as small and pedestrian-friendly as possible.

An analysis of the busiest internal intersection was performed, taking the projected AM and PM peak hour volumes from the driveway volumes at Runyon Road and Northwest Drive and carrying them through to the intersection, and dividing the turning movements equally. The specific turning directions do not make a difference since it is an all-way stop with one lane approaches. This procedure resulted in conservatively-high traffic volumes at the internal intersection, since many of the entering or exiting vehicles will actually have origins/destinations before reaching the intersection (e.g., the multifamily garage).

The following diagram shows the turning movements which were analyzed at the internal intersection:

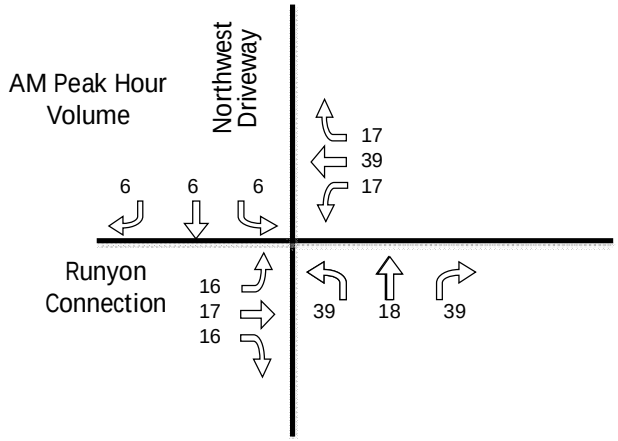

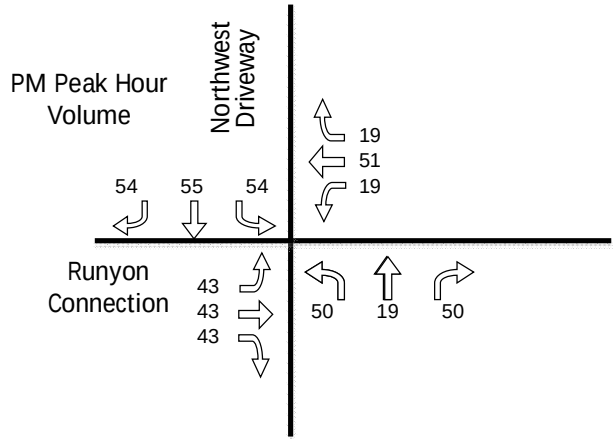

Table 7 – Traffic Operational Results – Internal Intersection

INTERSECTION	APPROACH	2035 Background Plus Site Traffic AM Peak Hour		2035 Background Plus Site Traffic PM Peak Hour	
		DELAY (SEC/VEH)	LOS	DELAY (SEC/VEH)	LOS
West Internal Intersection (All-Way Stop)	EB*	7.4	A	8.7	A
	WB*	7.6	A	8.5	A
	NB*	7.6	A	8.5	A
	SB*	7.3	A	8.8	A

* Stop-Controlled Approach

The results show that the all-way stop intersection experiences effectively no delay when accommodating the conservatively high projection of internal traffic volume. The delays are only slightly more than the delay of an isolated vehicle stopping for a stop sign, and there is no noticeable queuing.

V. ALTERNATIVE TWO

As stated previously, two alternatives were developed for the mixed-use redevelopment. The second alternative included two more connections in to and out of the proposed development along Beltway Drive. Alternative 2 would have access via a total of six driveways in 2017 and seven in 2035 models. Three of those driveways would have access to Belt Line Road, three would have access to Beltway Drive and one to Midway Road. Of these seven driveways, three intersections already exist as part of the existing Sam's Club site (Runyon Road, Northwest, and Northeast drives).

A. Existing and Future Area Conditions

Exhibit 13 illustrates the intersection geometry used for the traffic analyses, including the two new proposed drives.

All existing traffic volumes were the same for both alternatives and can be seen in **Exhibit 4**.

The additional driveways to be modeled in this analysis are as follows:

Proposed Drive 2 is a new full access driveway to Beltway Drive, located just west of Proposed Drive 1. This drive will allow direct access to the townhomes towards the rear of the development.

Proposed Drive 3 is a new full access driveway to Beltway Drive, located between Proposed Drive 2 and Surveyor Boulevard. This drive will allow direct access to the townhomes towards the rear of the development.

B. Project Traffic Characteristics

The same trip generation values were used for traffic assignment for both alternatives. The corresponding inbound and outbound traffic assignment percentages, where the directional distribution in **Table 3** is applied using the most probable paths to and from the site, can be found in **Exhibits 14** and **15**. **Exhibit 15** displays distribution percentages for the 2017 scenario where the East Drive does not have a direct connection in to and out of the new development, while **Exhibit 16** displays distribution percentages for the 2035 scenario with the East Drive connection to the site.

Exhibits 16 and **17** show the subsequent site-generated weekday AM and weekday PM peak hour turning movements for the 2017 and 2035 conditions, respectively. These volumes are obtained by multiplying the net external trip generation by the traffic assignment percentages.

The 2017 and 2035 background traffic volumes are the same for both alternatives.

Site traffic volumes were added to the background volumes to represent the estimated total (background plus site-generated) traffic conditions for each study year after completion of the proposed development. **Exhibit 18** shows the resulting 2017 weekday AM and PM peak hour total traffic volumes, and **Exhibit 19** shows the resulting 2035 weekday AM and PM peak hour total traffic volumes.

C. Alternative 2 Traffic Characteristics

The same procedures used in conducting a traffic operations analysis to determine potential capacity deficiencies in the 2015, 2017, and 2035 study years at the study intersections were followed.

Tables 8 and **9** show the intersection operational results for the weekday AM and PM peak hours, respectively.

Only the 2017 and 2035 background with site traffic delay values changed from the first alternative. The signalized intersections remained the same LOS for 2017 and 2035 total traffic years, reporting only a slight difference in delay times between the two alternatives. Overall, the unsignalized intersections displayed the same trends in both the AM and PM peaks in terms of LOS. The only movement to show a change in LOS was the northbound right turn out of the Northwest Drive. Instead of reporting LOS D in the AM peak hour as in Alternative 1, it reported a LOS C due to a 0.6 second decrease in delay. The additional driveways, Proposed Drive 2 and 3, reported LOS A across all scenarios for both and AM and PM peak hours.

Since the additional driveways project modest traffic volumes in future scenarios, and the site has been shown to function favorably in the basic scenario with only Drive 1 to Beltway Drive, the two additional driveways on the south side of the development are judged to be unnecessary. However, if constructed, they will have no negative impact on the Beltway Drive background traffic.

Table 8 – Traffic Operational Results for Alternative 2 – Weekday AM Peak Hour

INTERSECTION	APPROACH	2015 Existing Traffic AM Peak Hour		2017 Background Traffic AM Peak Hour		2017 Background Plus Site Traffic AM Peak Hour		2035 Background Traffic AM Peak Hour		2035 Background Plus Site Traffic AM Peak Hour	
		DELAY (SEC/VEH)	LOS	DELAY (SEC/VEH)	LOS	DELAY (SEC/VEH)	LOS	DELAY (SEC/VEH)	LOS	DELAY (SEC/VEH)	LOS
Midway Road @ Lindbergh Drive	EB	47.7	D	47.4	D	47.4	D	46.9	D	46.9	D
	WB	58.7	E	59.6	E	59.6	E	61.5	E	61.5	E
	NB	1.8	A	2.0	A	2.0	A	2.4	A	2.4	A
	SB	18.1	B	20.2	C	20.3	C	28.4	C	28.8	C
	Overall	**16.3**	**B**	**17.9**	**B**	**17.9**	**B**	**23.7**	**C**	**23.8**	**C**
Belt Line Road @ Beltway Drive	EB	4.2	A	4.4	A	4.5	A	5.2	A	5.3	A
	WB	5.7	A	5.8	A	5.8	A	6.1	A	6.1	A
	NBL	59.7	E	59.9	E	59.9	E	60.5	E	60.5	E
	Overall	**6.4**	**A**	**6.6**	**A**	**6.6**	**A**	**7.1**	**A**	**7.1**	**A**
Midway Road @ Belt Line Road	EB	46.7	D	47.3	D	58.7	E	52.9	D	69.7	E
	WB	50.9	D	51.4	D	51.7	D	53.8	D	54.2	D
	NB	29.5	C	29.3	C	30.5	C	29.9	C	30.9	C
	SB	27.6	C	30.4	C	30.4	C	42.1	D	42.4	D
	Overall	**38.2**	**D**	**39.4**	**D**	**42.8**	**D**	**46.0**	**D**	**50.8**	**D**
Midway Road @ Beltway Drive	EB	51.1	D	51.2	D	49.8	D	51.3	D	50.0	D
	WB	50.3	D	50.3	D	50.4	D	50.4	D	50.3	D
	NB	0.3	A	0.3	A	0.5	A	0.4	A	0.5	A
	SB	0.8	A	0.9	A	1.2	A	1.2	A	1.7	A
	Overall	**5.0**	**A**	**5.1**	**A**	**6.1**	**A**	**5.3**	**A**	**6.4**	**A**
Midway Road @ Proton Drive	EB	53.4	D	53.4	D	53.4	D	53.5	D	53.5	D
	WB	55.8	E	55.7	E	55.7	E	55.5	E	55.5	E
	NB	9.6	A	10.2	B	10.3	B	11.9	B	12.0	B
	SB	2.0	A	2.3	A	2.5	A	3.3	A	3.7	A
	Overall	**8.8**	**A**	**9.1**	**A**	**9.1**	**A**	**10.2**	**B**	**10.4**	**B**
Belt Line Road @ Runyon Road	EB	0.2	A	0.2	A	0.3	A	0.3	A	0.3	A
	WB	0.2	A	0.2	A	0.3	A	0.3	A	0.3	A
	NB	54.0	D	54.0	D	52.8	D	54.0	D	52.3	D
	SB	51.0	D	51.0	D	51.2	D	50.9	D	51.5	D
	Overall	**2.0**	**A**	**2.0**	**A**	**3.0**	**A**	**2.0**	**A**	**2.7**	**A**
Belt Line Road @ Surveyor Boulevard	EB	12.4	B	13.6	B	13.9	B	17.7	B	18.1	B
	WB	10.5	B	11.0	B	12.4	B	11.6	B	13.0	B
	NB	19.0	B	19.1	B	19.1	B	18.9	B	18.9	B
	SB	17.6	B	18.3	B	18.3	B	20.6	C	20.6	C
	Overall	**12.4**	**B**	**13.3**	**B**	**13.9**	**B**	**15.8**	**B**	**16.5**	**B**
Belt Line Road @ Northeast Drive	NBR*	19.4	C	0.0	A	24.2	C	0.0	A	26.8	D
Belt Line Road @ Northwest Drive	EBL	15.7	C	16.3	C	16.5	C	17.9	C	18.1	C
	WBL	29.0	D	0.0	A	28.2	D	0.0	A	32.5	D
	NBR*	19.5	C	0.0	A	23.2	C	0.0	A	24.8	C
	SBR*	13.8	B	14.1	B	14.2	B	14.8	B	15.0	B
Midway Road @ East Drive	EB*	108.7	F	150.7	F	183.8	F	52.8	F	75.9	F
	NBL	82.6	F	97.7	F	107.5	F	161.5	F	190.1	F
Midway Road @ Beltwood Parkway	EBL*	29.0	D	30.7	D	32.7	D	35.8	E	38.4	E
	WB*	82.3	F	93.6	F	105.9	F	145.9	F	163.9	F
	NBL	56.0	F	61.6	F	69.8	F	84.0	F	98.2	F
	SBL	18.7	C	19.7	C	20.4	C	23.1	C	24.0	C
Beltway Drive @ Proposed Drive 1	EBL	-	-	-	-	7.3	A	-	-	7.3	A
	SB*	-	-	-	-	8.9	A	-	-	8.9	A
Beltway Drive @ Proposed Drive 2	EBL	-	-	-	-	7.2	A	-	-	7.3	A
	SB*	-	-	-	-	8.8	A	-	-	8.8	A
Beltway Drive @ Proposed Drive 3	EBL	-	-	-	-	7.2	A	-	-	7.2	A
	SB*	-	-	-	-	8.6	A	-	-	8.6	A
Surveyor Boulevard @ Beltway Drive	EB*	7.9	A	7.9	A	8.0	A	8.0	A	8.1	A
	WB*	7.7	A	7.8	A	7.9	A	7.9	A	8.1	A
	NB*	7.8	A	7.8	A	7.9	A	8.0	A	8.1	A
	SB*	8.5	A	8.6	A	8.7	A	8.8	A	8.9	A

* Stop-Controlled Approach - No movements in Time Period

Blue cells are unsignalized intersections.

Table 9 – Traffic Operational Results for Alternative 2– Weekday PM Peak Hour

INTERSECTION	APPROACH	2015 Existing Traffic PM Peak Hour		2017 Background Traffic PM Peak Hour		2017 Background Plus Site Traffic PM Peak Hour		2035 Background Traffic PM Peak Hour		2035 Background Plus Site Traffic PM Peak Hour	
		DELAY (SEC/VEH)	LOS	DELAY (SEC/VEH)	LOS	DELAY (SEC/VEH)	LOS	DELAY (SEC/VEH)	LOS	DELAY (SEC/VEH)	LOS
Midway Road @ Lindbergh Drive	EB	50.5	D	50.4	D	50.4	D	52.2	D	52.3	D
	WB	63.1	E	64.0	E	64.0	E	71.0	E	71.2	E
	NB	2.2	A	2.7	A	2.8	A	4.8	A	5.1	A
	SB	19.5	B	21.3	C	21.6	C	26.6	C	27.1	C
	Overall	**16.3**	**B**	**17.4**	**B**	**17.6**	**B**	**21.4**	**C**	**21.7**	**C**
Belt Line Road @ Beltway Drive	EB	6.0	A	6.2	A	6.4	A	7.4	A	7.5	A
	WB	5.6	A	5.8	A	5.8	A	6.3	A	6.3	A
	NBL	58.9	E	59.1	E	59.1	E	59.5	E	59.6	E
	Overall	**9.3**	**A**	**9.7**	**A**	**9.6**	**A**	**10.4**	**B**	**10.4**	**B**
Midway Road @ Belt Line Road	EB	44.5	D	43.9	D	45.6	D	46.1	D	48.5	D
	WB	63.6	E	63.3	E	66.6	E	72.6	E	78.7	E
	NB	30.2	C	48.1	D	49.1	D	55.8	E	56.2	E
	SB	45.5	D	47.8	D	47.9	D	56.2	E	56.7	E
	Overall	**45.9**	**D**	**50.8**	**D**	**52.4**	**D**	**57.7**	**E**	**60.1**	**E**
Midway Road @ Beltway Drive	EB	50.8	D	50.8	D	50.9	D	50.9	D	51.2	D
	WB	49.4	D	49.5	D	50.6	D	49.4	D	50.5	D
	NB	11.0	B	11.5	B	12.7	B	23.4	C	25.0	C
	SB	0.7	A	0.8	A	0.9	A	1.2	A	1.4	A
	Overall	**10.1**	**B**	**10.4**	**B**	**11.5**	**B**	**16.3**	**B**	**17.6**	**B**
Midway Road @ Proton Drive	EB	46.2	D	46.1	D	46.1	D	45.9	D	45.9	D
	WB	60.6	E	60.8	E	60.8	E	61.2	E	61.2	E
	NB	12.2	B	12.9	B	13.5	B	15.4	B	15.6	B
	SB	4.4	A	4.8	A	5.0	A	6.3	A	2.4	A
	Overall	**11.5**	**B**	**12.1**	**B**	**12.4**	**B**	**13.9**	**B**	**12.2**	**B**
Belt Line Road @ Runyon Road	EB	0.4	A	0.4	A	2.0	A	0.4	A	2.0	A
	WB	0.7	A	0.7	A	1.2	A	0.9	A	1.2	A
	NB	51.2	D	51.2	D	51.8	D	51.2	D	51.3	D
	SB	54.1	D	53.9	D	54.6	D	53.8	D	54.9	D
	Overall	**4.1**	**A**	**4.3**	**A**	**5.7**	**A**	**4.3**	**A**	**5.5**	**A**
Belt Line Road @ Surveyor Boulevard	EB	15.3	B	16.8	B	17.2	B	24.1	C	24.6	C
	WB	10.9	B	11.3	B	11.9	B	12.5	B	13.2	B
	NB	26.6	C	27.6	C	27.6	C	29.3	C	29.3	C
	SB	24.3	C	24.3	C	24.3	C	24.5	C	24.5	C
	Overall	**15.5**	**B**	**16.3**	**B**	**16.7**	**B**	**20.0**	**B**	**20.5**	**C**
Belt Line Road @ Northeast Drive	NBR*	24.2	C	21.2	C	25.6	D	23.9	C	29.1	D
Belt Line Road @ Northwest Drive	EBL	23.2	C	24.8	C	26.5	D	29.6	D	31.2	D
	WBL	139.2	F	40.7	E	113.8	F	57.8	F	161.9	F
	NBR*	34.4	D	23.3	C	28.0	D	27.0	D	32.2	D
	SBR*	17.3	C	18.0	C	18.7	C	19.8	C	20.4	C
Midway Road @ East Drive	EB*	32.9	D	35.1	E	38.1	E	26.7	D	30.6	D
	NBL	37.1	E	40.2	E	43.1	E	52.7	F	68.2	F
Midway Road @ Beltwood Parkway	EBL*	200+	F	200+	F	200+	F	200+	F	200+	F
	WB*	200+	F	200+	F	200+	F	200+	F	89.4	F
	NBL	32.1	D	34.4	D	37.0	E	43.5	E	47.0	E
	SBL	112.2	F	135.5	F	163.8	F	200+	F	200+	F
Beltway Drive @ Proposed Drive 1	EB	-	-	-	-	7.4	A	-	-	7.4	A
	SB*	-	-	-	-	9.1	A	-	-	9.1	A
Beltway Drive @ Proposed Drive 2	EB	-	-	-	-	7.3	A	-	-	7.3	A
	SB*	-	-	-	-	8.9	A	-	-	8.9	A
Beltway Drive @ Proposed Drive 3	EB	-	-	-	-	7.3	A	-	-	7.3	A
	SB*	-	-	-	-	8.7	A	-	-	8.7	A
Surveyor Boulevard @ Beltway Drive	EB*	8.5	A	8.6	A	8.8	A	8.8	A	9.0	A
	WB*	9.9	A	10.1	B	10.3	B	10.8	B	11.0	B
	NB*	9.4	A	9.5	A	9.6	A	10.0	A	10.2	B
	SB*	10.2	B	10.4	B	10.6	B	11.1	B	11.2	B

* Stop-Controlled Approach - No movements in Time Period

Blue cells are unsignalized intersections.

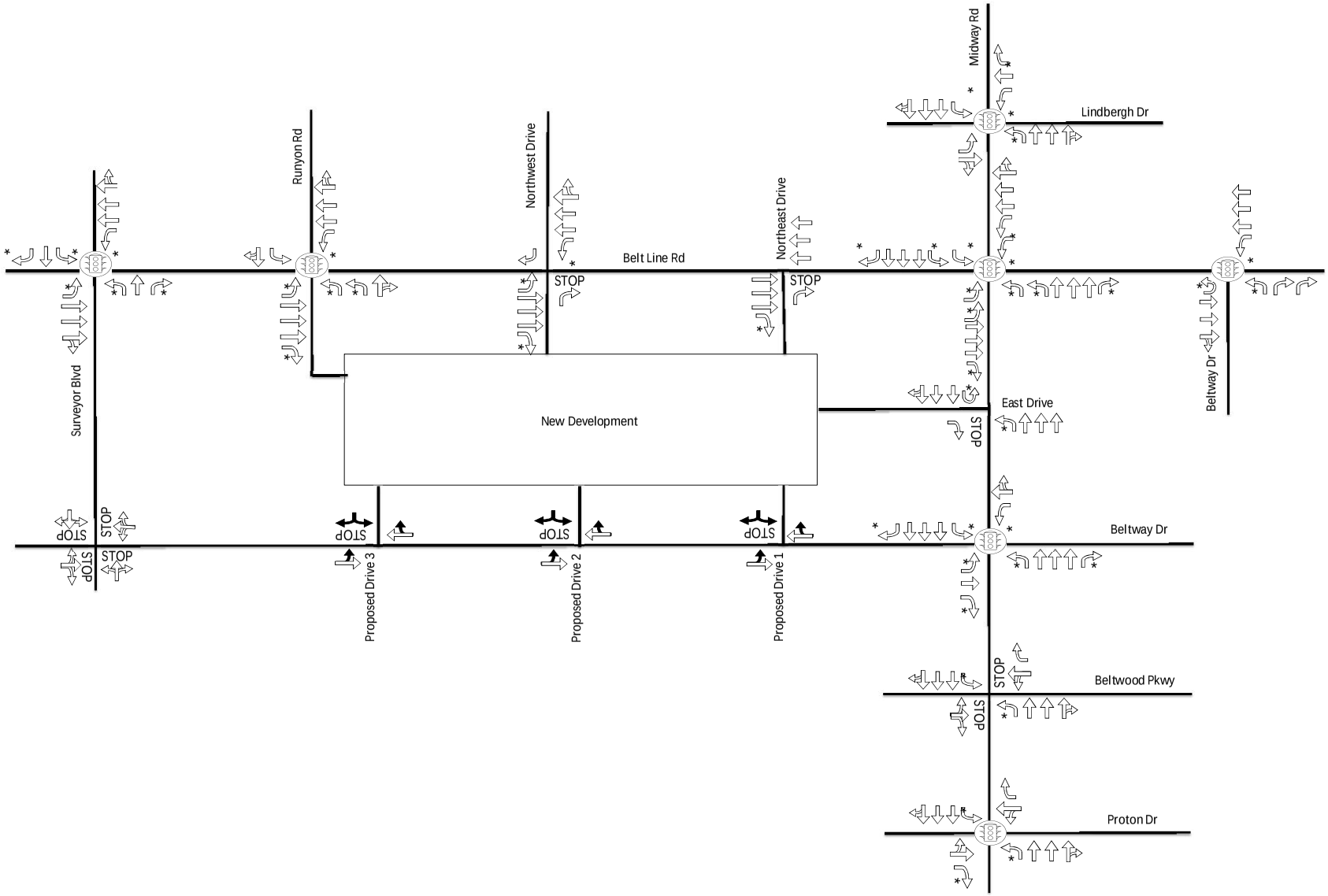

LEGEND:

= Signalized Intersection

STOP = Stop-Controlled Approach

= Travel Lane

* = Turn Bay

= Driveway Lanes or Off-Site Improvements

EXHIBIT 13

Lane Assignment and Intersection Control (Alternative 2)

Sam's Club Site Redevelopment - TIA

Kimley»Horn

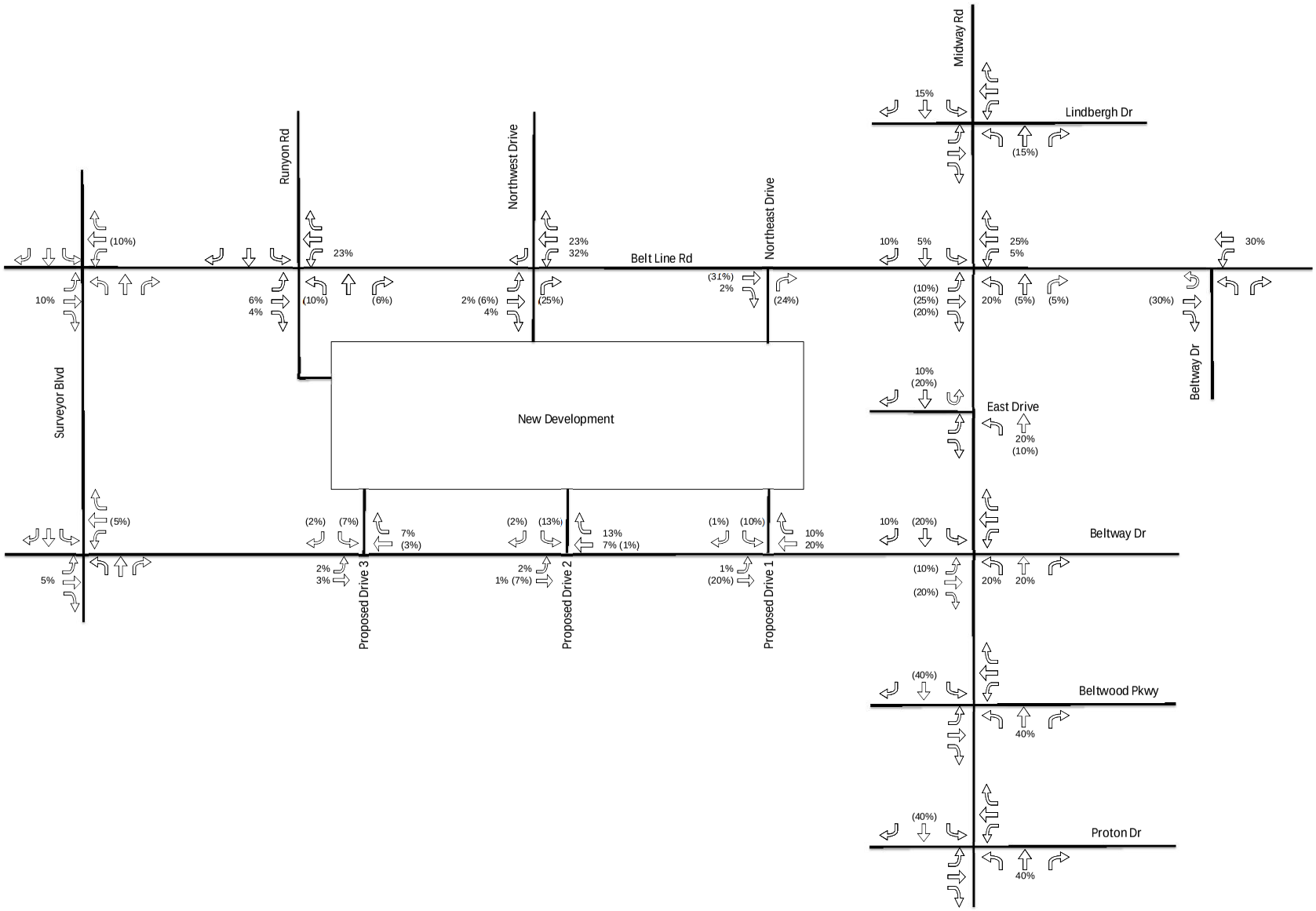

LEGEND:
X (Y)
X% = Percentage of Inbound Site-Generated Traffic
Y% = Percentage of Outbound Site-Generated Traffic

North
Not To Scale

EXHIBIT 14

Trip Distribution and Traffic Assignment - 2017 (Alternative 2)

Sam's Club Redevelopment - TIA

Kimley»Horn

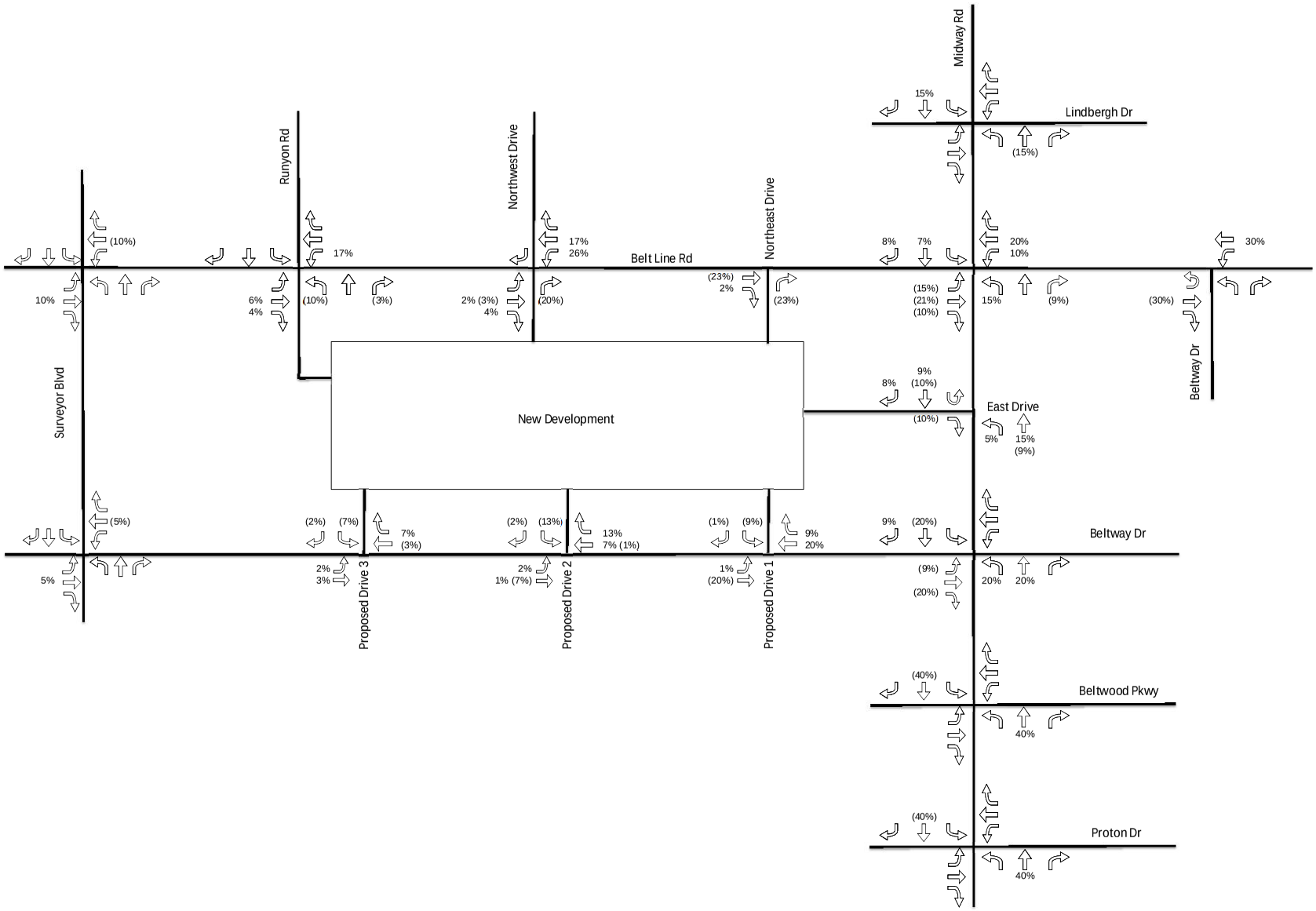

LEGEND:
X (Y)
X% = Percentage of Inbound Site-Generated Traffic
Y% = Percentage of Outbound Site-Generated Traffic

North
Not To Scale

EXHIBIT 15

Trip Distribution and Traffic Assignment - 2035 (Alternative 2)

Sam's Club Redevelopment - TIA

Kimley»Horn

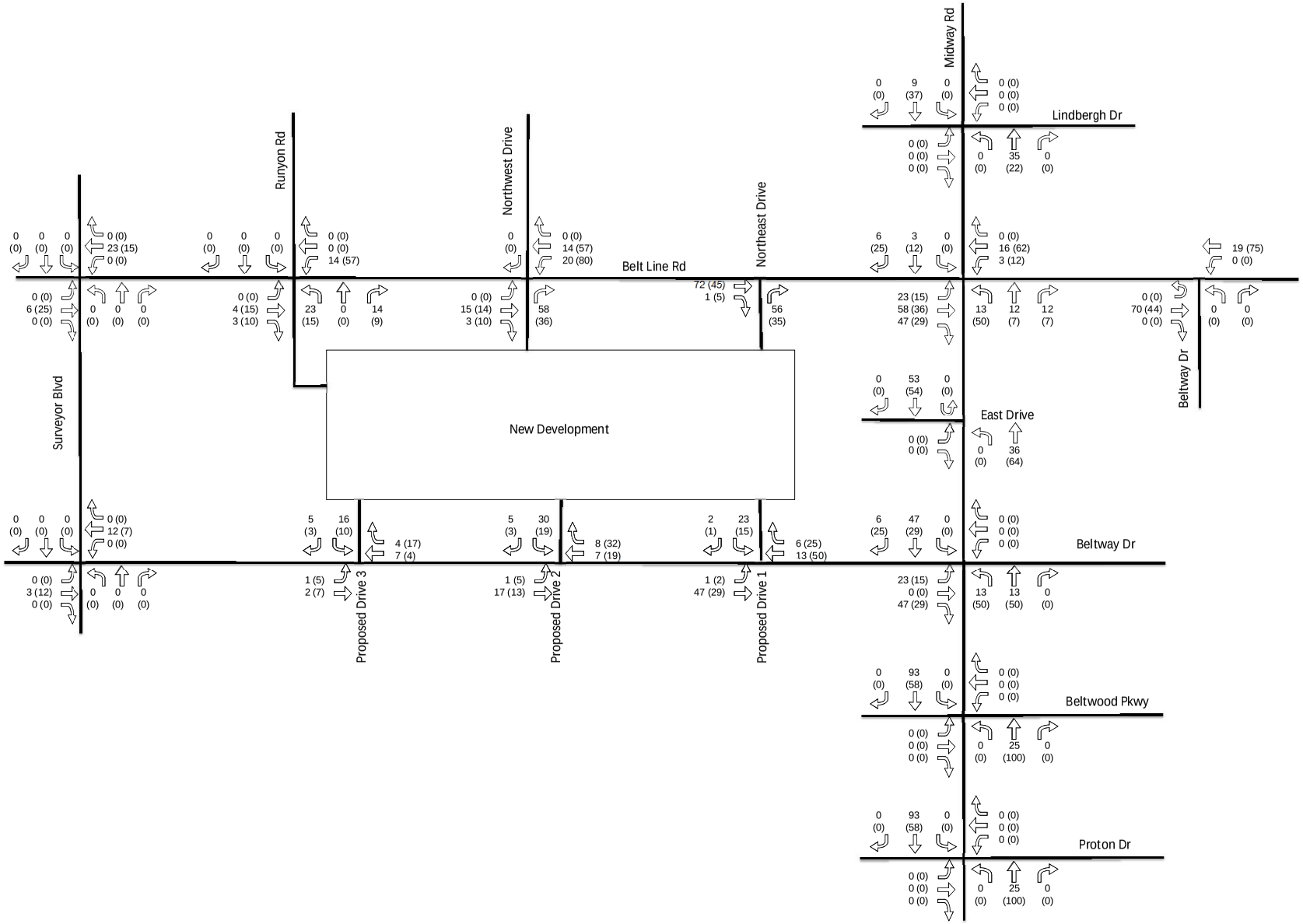

LEGEND:
X (Y)
X = Weekday AM Peak Hour Turning Movements
Y = Weekday PM Peak Hour Turning Movements
Volumes may not sum from point to point due to rounding
and presence of smaller driveways not included in analysis.

North
↑
Not To Scale

EXHIBIT 16

Site-Generated Traffic Volumes - 2017 (Alternative 2)

Sam's Club Redevelopment - TIA

Kimley»Horn

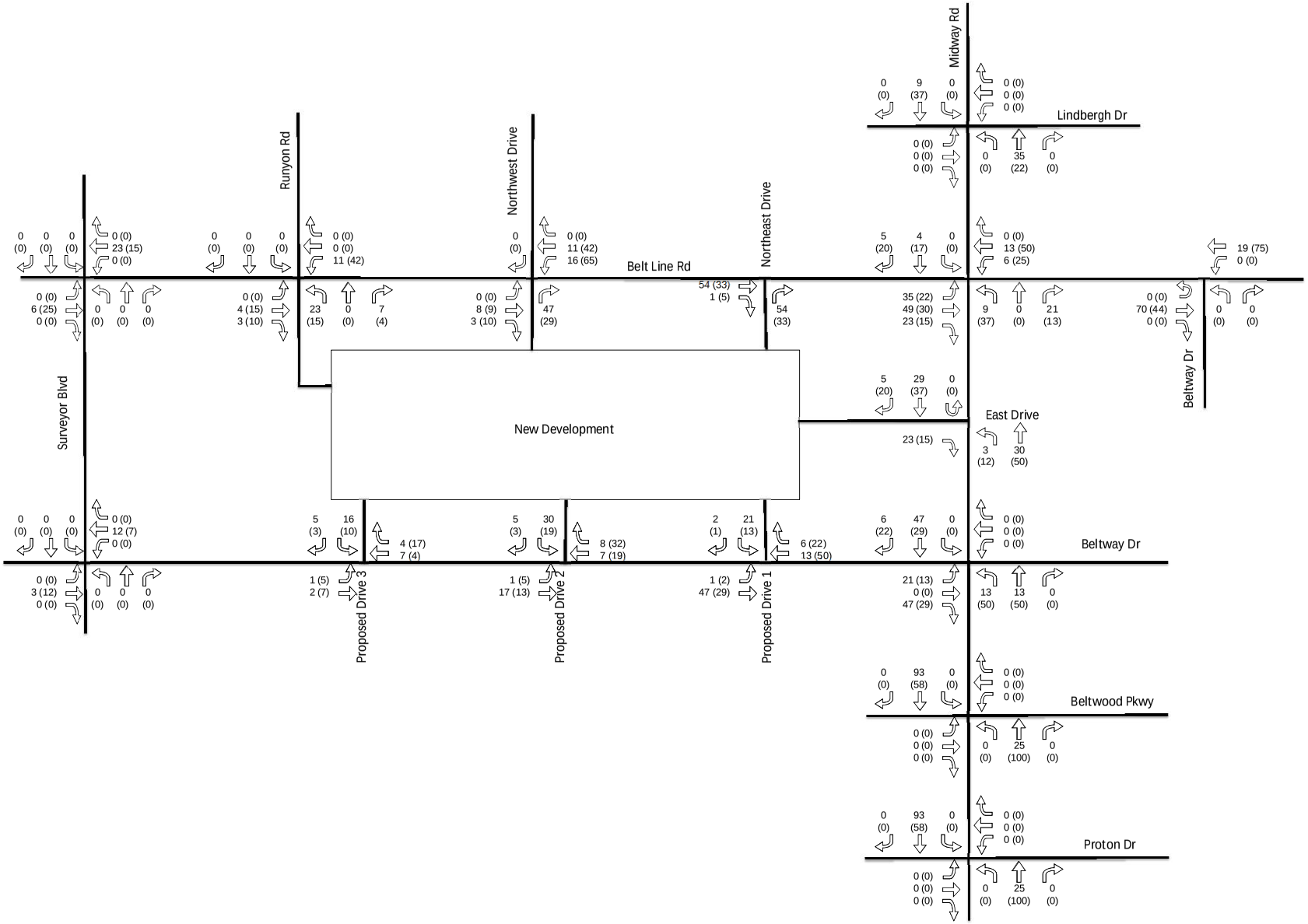

LEGEND:
X (Y)
X = Weekday AM Peak Hour Turning Movements
Y = Weekday PM Peak Hour Turning Movements
Volumes may not sum from point to point due to rounding
and presence of smaller driveways not included in analysis.

North
Not To Scale

EXHIBIT 17

Site-Generated Traffic Volumes - 2035 (Alternative 2)

Sam's Club Redevelopment - TIA

Kimley»Horn

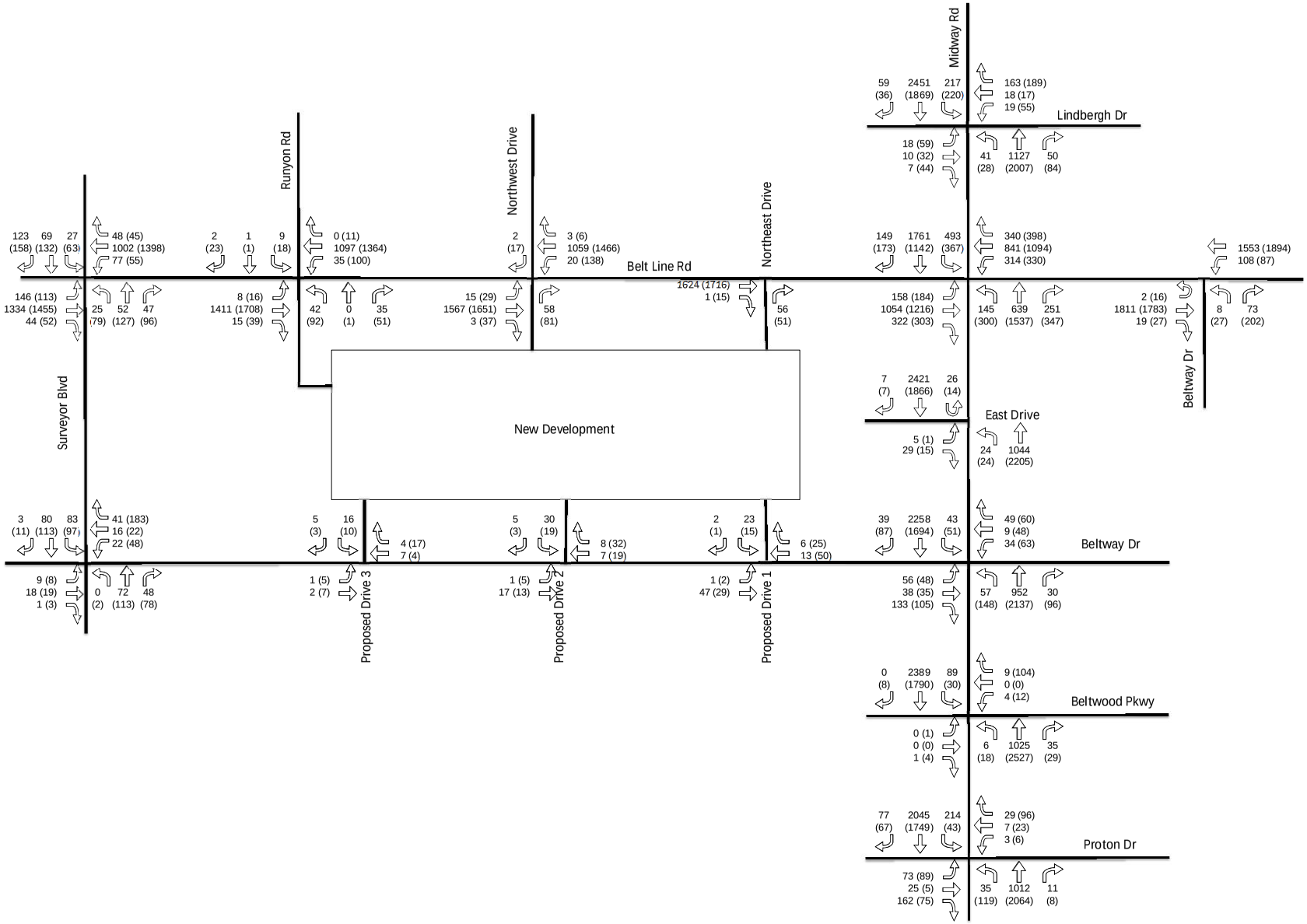

EXHIBIT 18

2017 Background Plus Site-Generated Traffic Volumes (Alternative 2)

Sam's Club Redevelopment - TIA

Kimley»Horn

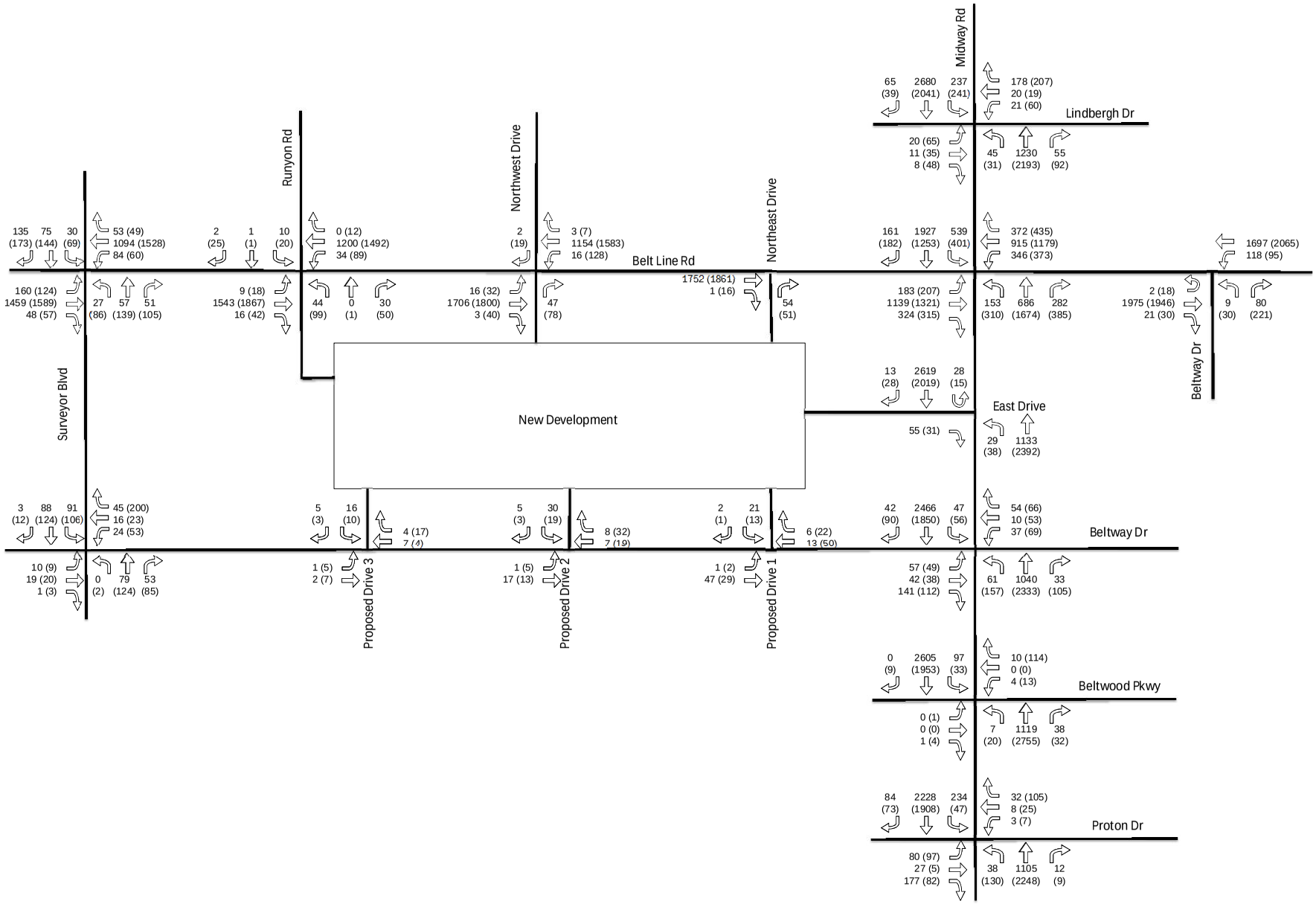

LEGEND:
X (Y)
X = Weekday AM Peak Hour Turning Movements
Y = Weekday PM Peak Hour Turning Movements
Volumes may not sum from point to point due to rounding
and presence of smaller driveways not included in analysis.

North
Not To Scale

EXHIBIT 19

2035 Background Plus Site-Generated Traffic Volumes (Alternative 2)

Sam's Club Redevelopment - TIA

Kimley»Horn

VI. CONCLUSIONS AND RECOMMENDATIONS

Based on the analysis presented in this report, the proposed mixed-use redevelopment on the southwest corner of Belt Line Road and Midway Road can be successfully incorporated into the surrounding roadway network. The site does not result in a significant negative impact to intersection or roadway operating conditions either in 2017 or in 2035. The proposed site driveways provide the appropriate level of access for the mixed-use redevelopment.

The results show that the proposed Drive 1 to Beltway Drive will not negatively affect local traffic operations on Beltway Drive. The potential addition of Drive 2 and Drive 3 to Beltway Drive in the Alternative 2 case also does not hurt operations on Beltway Drive. However, since the redevelopment site achieves favorable access with only Drive 1 to Beltway Drive, the additional Drive 2 and Drive 3 should be considered optional from a traffic perspective.

APPENDIX

Staff Traffic Analysis Comments
October 27, 2015
and Responses

Staff Comments – Addison Square
10/27/2015

Traffic Analysis:

1. **Executive Summary Page iii:** Please provide the difference between streets depicted in bullet #3 and #4

KH Response: The intersection of Belt Line Road and Runyon Road was listed twice. This has been corrected.

2. **Executive Summary Page iv, 2nd paragraph**: Please provide version of the ITE Trip Generation Manual used.

KH Response: The 9th edition is used as noted in Section III. This information has been added.

3. **Executive Summary Page iv, 2nd paragraph**: Please provide additional detail to the last sentence in reference to "acceptable operations." What are the acceptable operations based on?

KH Response: Acceptable operations for signals are overall operations at LOS D or better, or the site impact being minimal where the background conditions do not meet LOS E.

4. **Executive Summary Page iv, last paragraph, last sentence**: Please provide analysis support regarding the operational and pedestrian operations of the roundabout.

KH Response: A roundabout would be successful at that location, but by its nature it is slightly less favorable to pedestrians than a single four-way stop intersection. The analysis in the report shows that a four-way stop-controlled intersection can easily handle the vehicle volumes. Therefore, the additional vehicle capacity that is provided by the roundabout, at a cost to space and pedestrians friendliness, is not necessary, and the four-way stop is the preferred option. See #15 for more discussion.

5. **Page 1, I. Introduction, B. Methodology, 1st paragraph**: Provide Synchro version that was used.

KH Response: Synchro 8 is used, specifically version 8.0.804.795.

6. **Page 4, II. Existing and Future Area Conditions, A. Roadway Characteristics:** Please provide the difference between streets depicted in bullet #3 and #4

KH Response: The intersection of Belt Line Road and Runyon Road was listed twice. This has been corrected.

7. **Page 4, II. Existing and Future Area Conditions:** Please provide more detail on existing signal operations.

KH Response: Details of the Midway corridor signals and their 160-second cycle times was added.

8. **Page 5, II. Existing and Future Area Conditions, D. Existing Traffic Volumes:** Was there an effort done to account for the fact that traffic counts were taken during the summer? If no effort was done in order to account for this, please provide support for your assumptions.

KH Response: Counts had to be collected in the summer as a result of the project kickoff time, and to complete the counts before the utility construction along Belt Line Road reached that portion of the corridor. Additional detail was added to the report regarding the inconclusive comparisons against previous counts and the judgement to not modify the existing background traffic.

9. **Page 9, III. Project Traffic Characteristics, A. Site-Generated Traffic, 4th paragraph:** Please provide version of ITE Trip Generation Manual used.

KH Response: The first reference to the manual notes that it is the 9th Edition.

10. **Page 11, III. Project Traffic Characteristics, D. Development of 2017 Background Traffic:** Please provide details on what the 2% growth rate is based on.

KH Response: Detail was added to show the short-term trends of 0.2% growth on Belt Line Road and -0.6% growth on Midway Road, all the historical records are included in the Appendix. The 2% annual growth is an industry standard to assume some growth when it is not supported by recent evidence. It should be noted that the operational analysis of the traffic impact for a relatively modest site will not significantly change due to modifications in the background or baseline traffic. The site's impact will be about the same amount, just starting at a slightly different point if the background traffic is modified. This is especially applicable for this site considering it will generate less traffic than the existing traffic from the Sam's club that was active when the counts were taken. Also, higher background traffic will be more "noise" which will drown out the already small signal of the site-generated traffic (3.5% of the Midway/Belt Line intersection traffic at the highest point).

11. **Page 11, III. Project Traffic Characteristics, D. Development of 2035 Background and Total Traffic:** Please provide details on what the 0.5% growth rate is based on.

KH Response: The 0.5% growth is another standard used in the longer term analyses to show some growth while not overwhelming the background traffic. Peak hour traffic does not grow significantly past a certain technical limit of roadway capacity. When demand is added to a corridor in that case, the peak traffic demand spreads over a long time frame rather than continue to grow the peak demand in a single hour.

12. **Page 21, Table 5:** Please define the blue highlighted portion of the table.

KH Response: The blue background is used to differentiate the unsignalized intersection results from the signalized intersections which remain with the white background.

13. **Page 22, Table 6:** Please define the blue highlighted portion of the table.

KH Response: See #12.

14. **Page 23, C. 2015 Existing Traffic Operations:** Provide additional detail on which movements are coordinated.

KH Response: Directional detail was added.

15. **Page 24, I. Internal Roadway Intersections, 1st paragraph, last sentence**: Please provide support for the roundabout statement.

KH Response: In a purpose-built walkable environment, vehicle speeds are limited by the street design and the intersections. The intersection control can be accomplished to an adequate level by an all-way stop or a roundabout. The roundabout can handle more vehicle traffic than the four-way stop. However, pedestrian paths are more circuitous across a roundabout leg than at a stop-controlled approach, and the continuous vehicle flow presents difficulties to some users, such as blind pedestrians. It is simply doesn't fit as well into the walkable context of the neighborhood. A roundabout could be designed which would be successful for both vehicles and pedestrians in that intersection. However, since the vehicle volumes do not require the additional capacity of a roundabout, we consider the smaller four-way stop to be slightly more effective to simplify operations, require stops from vehicles to give pedestrians a psychological advantage, and minimize the intersection footprint on the valuable interior of the site.

16. **Page 25, paragraph below Table 7**: Please provide analysis to support roundabout statement.

KH Response: See #15.

17. **Page 28, Table 8:** Please define the blue highlighted portion of the table.

KH Response: See #12.

18. **Page 29, Table 9, Midway Road at Beltway Drive WB Direction:** Were traffic signal timings changed between 2017 and 2035 operations? The delays in 2035 should not be lower than 2017.

KH Response: Signal timings were not changed in any scenario. The very small reduction in delay is an artifact of how the HCM procedure calculates volume/capacity ratios and resulting average delays for each movement, and then aggregates those movements into a delay for the approach. Adding more traffic to relatively low-delay movements within an approach can reduce the average delay for a group of vehicles.

19. **Page 29, Table 9:** Please define the blue highlighted portion of the table.

KH Response: See #12.

20. **Page 30:** Spelling Mistake, “Lane not “Lase”

KH Response: Corrected.

Traffic Counts and Historical Data

SWC Redevelopment Belt Line Rd and Midway Rd in Addison, TX
Historical Link Volumes and Growth Rates

Belt Line Road

Record	Year	Link Start	Link End	Source	24-Hour Volume	Annual Growth Rate
1	1993	Surveyor Blvd	Midway Rd	Addison	40,010	
2	1996	Surveyor Blvd	Midway Rd	Addison	52,709	9.6%
3	1999	Surveyor Blvd	Midway Rd	Addison	46,858	-3.8%
4	2002	Surveyor Blvd	Midway Rd	Addison	46,483	-0.3%
5	2006	Surveyor Blvd	Midway Rd	Addison	39,671	-3.9%
6	2009	Surveyor Blvd	Midway Rd	Addison	37,650	-1.7%
7	2011	Surveyor Blvd	Midway Rd	Addison	38,148	0.7%
8	2012	Runyon Rd	Midway Rd	NCTCOG	40,914	7.3%
9	2014	Surveyor Blvd	Midway Rd	NCTCOG	38,402	-3.1%
10	2015	Runyon Rd	Midway Rd	KHA	38,492	0.2%
					Annual Change Last 4 Years:	**0.2%**

Midway Road South of Belt Line Road

Record	Year	Link Start	Link End	Source	24-Hour Volume	Annual Growth Rate
1	1993	Belt Line Rd	Beltway Dr	Addison	43,665	
2	1996	Belt Line Rd	Beltway Dr	Addison	44,997	1.0%
3	1999	Belt Line Rd	Beltway Dr	Addison	42,853	-1.6%
4	2002	Belt Line Rd	Beltway Dr	Addison	47,925	3.8%
5	2006	Belt Line Rd	Beltway Dr	Addison	41,034	-3.8%
6	2009	Belt Line Rd	Beltway Dr	Addison	38,677	-2.0%
7	2011	Belt Line Rd	Beltway Dr	Addison	41,171	3.2%
8	2014	Belt Line Rd	Beltway Dr	NCTCOG	40,004	-1.0%
9	2015	Belt Line Rd	Beltway Dr	KHA	40,173	0.4%
					Annual Change Last 4 Years:	**-0.6%**

Surveyor Boulevard South of Belt Line Road

Record	Year	Link Start	Link End	Source	24-Hour Volume	Annual Growth Rate
1	1996	Belt Line Rd	Beltway Dr	Addison	3,490	
2	1999	Belt Line Rd	Beltway Dr	Addison	4,526	9.1%
3	2002	Belt Line Rd	Beltway Dr	Addison	3,117	-11.7%
4	2004	Belt Line Rd	Beltway Dr	NCTCOG	3,141	0.4%
5	2006	Belt Line Rd	Beltway Dr	Addison	3,424	4.4%
6	2009	Belt Line Rd	Beltway Dr	Addison	2,446	-10.6%
7	2011	Belt Line Rd	Beltway Dr	Addison	3,170	13.8%
8	2014	Belt Line Rd	Beltway Dr	NCTCOG	3,380	2.2%
9	2015	Belt Line Rd	Beltway Dr	KHA	4,047	19.7%
					Annual Change Last 4 Years:	**6.3%**

Runyon Road South of Belt Line Road

Record	Year	Link Start	Link End	Source	24-Hour Volume	Annual Growth Rate
1	2015	Belt Line Rd	Driveways	KHA	1,668	

Beltway Drive West of Midway Road

Record	Year	Link Start	Link End	Source	24-Hour Volume	Annual Growth Rate
1	1993	Surveyor Blvd	Midway Rd	Addison	4,822	
2	1996	Surveyor Blvd	Midway Rd	Addison	5,925	7.1%
3	1999	Surveyor Blvd	Midway Rd	Addison	5,733	-1.1%
4	2002	Surveyor Blvd	Midway Rd	Addison	4,530	-7.6%
5	2006	Surveyor Blvd	Midway Rd	Addison	3,556	-5.9%
6	2009	Surveyor Blvd	Midway Rd	Addison	3,154	-3.9%
7	2011	Surveyor Blvd	Midway Rd	Addison	2,775	-6.2%
8	2014	Surveyor Blvd	Midway Rd	NCTCOG	2,899	1.5%
9	2015	Runyon Rd	Midway Rd	KHA	3,596	24.0%

SWC Redevelopment Belt Line Rd and Midway Rd in Addison, TX
Historical Link Volumes and Growth Rates

Belt Line Road

Record	Year	Link Start	Link End	Source	24-Hour Volume	Annual Growth Rate
1	1993	Surveyor Blvd	Midway Rd	Addison	40,010	
2	1996	Surveyor Blvd	Midway Rd	Addison	52,709	9.6%
3	1999	Surveyor Blvd	Midway Rd	Addison	46,858	-3.8%
4	2002	Surveyor Blvd	Midway Rd	Addison	46,483	-0.3%
5	2006	Surveyor Blvd	Midway Rd	Addison	39,671	-3.9%
6	2009	Surveyor Blvd	Midway Rd	Addison	37,650	-1.7%
7	2011	Surveyor Blvd	Midway Rd	Addison	38,148	0.7%
8	2012	Runyon Rd	Midway Rd	NCTCOG	40,914	7.3%
9	2014	Surveyor Blvd	Midway Rd	NCTCOG	38,402	-3.1%
10	2015	Runyon Rd	Midway Rd	KHA	38,492	0.2%

Midway Road South of Belt Line Road

Record	Year	Link Start	Link End	Source	24-Hour Volume	Annual Growth Rate
1	1993	Belt Line Rd	Beltway Dr	Addison	43,665	
2	1996	Belt Line Rd	Beltway Dr	Addison	44,997	1.0%
3	1999	Belt Line Rd	Beltway Dr	Addison	42,853	-1.6%
4	2002	Belt Line Rd	Beltway Dr	Addison	47,925	3.8%
5	2006	Belt Line Rd	Beltway Dr	Addison	41,034	-3.8%
6	2009	Belt Line Rd	Beltway Dr	Addison	38,677	-2.0%
7	2011	Belt Line Rd	Beltway Dr	Addison	41,171	3.2%
8	2014	Belt Line Rd	Beltway Dr	NCTCOG	40,004	-1.0%
9	2015	Belt Line Rd	Beltway Dr	KHA	40,173	0.4%

Surveyor Boulevard South of Belt Line Road

Record	Year	Link Start	Link End	Source	24-Hour Volume	Annual Growth Rate
1	1996	Belt Line Rd	Beltway Dr	Addison	3,490	
2	1999	Belt Line Rd	Beltway Dr	Addison	4,526	9.1%
3	2002	Belt Line Rd	Beltway Dr	Addison	3,117	-11.7%
4	2004	Belt Line Rd	Beltway Dr	NCTCOG	3,141	0.4%
5	2006	Belt Line Rd	Beltway Dr	Addison	3,424	4.4%
6	2009	Belt Line Rd	Beltway Dr	Addison	2,446	-10.6%
7	2011	Belt Line Rd	Beltway Dr	Addison	3,170	13.8%
8	2014	Belt Line Rd	Beltway Dr	NCTCOG	3,380	2.2%
9	2015	Belt Line Rd	Beltway Dr	KHA	4,047	19.7%

Runyon Road South of Belt Line Road

Record	Year	Link Start	Link End	Source	24-Hour Volume	Annual Growth Rate
1	2015	Belt Line Rd	Driveways	KHA	1,668	

Beltway Drive West of Midway Road

Record	Year	Link Start	Link End	Source	24-Hour Volume	Annual Growth Rate
1	1993	Surveyor Blvd	Midway Rd	Addison	4,822	
2	1996	Surveyor Blvd	Midway Rd	Addison	5,925	7.1%
3	1999	Surveyor Blvd	Midway Rd	Addison	5,733	-1.1%
4	2002	Surveyor Blvd	Midway Rd	Addison	4,530	-7.6%
5	2006	Surveyor Blvd	Midway Rd	Addison	3,556	-5.9%
6	2009	Surveyor Blvd	Midway Rd	Addison	3,154	-3.9%
7	2011	Surveyor Blvd	Midway Rd	Addison	2,775	-6.2%
8	2014	Surveyor Blvd	Midway Rd	NCTCOG	2,899	1.5%
9	2015	Runyon Rd	Midway Rd	KHA	3,596	24.0%

EB Belt Line Road West of Midway Road

Date Began:
6/23/2015

TIME	0:00	0:15	0:30	0:45	TOTAL
0:00	60	43	29	22	154
1:00	22	27	26	18	93
2:00	29	14	20	7	70
3:00	13	13	9	10	45
4:00	15	19	15	33	82
5:00	33	57	96	95	281
6:00	125	139	196	207	667
7:00	236	314	315	388	1253
8:00	306	368	398	324	1396
9:00	384	233	202	179	998
10:00	203	165	223	209	800
11:00	209	220	250	241	920
12:00	261	267	286	275	1089
13:00	276	271	268	239	1054
14:00	252	238	267	221	978
15:00	254	220	242	236	952
16:00	251	299	348	469	1367
17:00	399	360	470	428	1657
18:00	392	420	361	371	1544
19:00	327	288	224	212	1051
20:00	192	180	180	161	713
21:00	164	173	157	133	627
22:00	159	121	107	93	480
23:00	83	86	56	51	276
				TOTAL:	18547

The A.M. peak hour from 8:15 to 9:15 is 1474
The P.M. peak hour from 17:30 to 18:30 is 1710

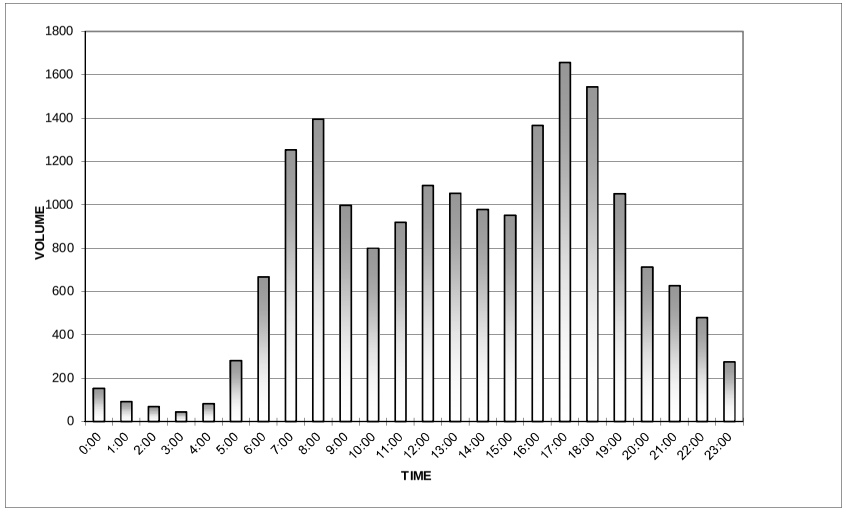

WB Belt Line Road West of Midway Road

Date Began:
6/23/2015

TIME	0:00	0:15	0:30	0:45	TOTAL
0:00	44	42	28	50	164
1:00	28	24	14	16	82
2:00	25	22	12	9	68
3:00	10	8	12	22	52
4:00	25	22	42	42	131
5:00	56	68	122	122	368
6:00	109	171	195	218	693
7:00	206	256	302	280	1044
8:00	258	253	265	239	1015
9:00	238	262	200	253	953
10:00	204	233	218	262	917
11:00	256	291	385	354	1286
12:00	410	370	404	360	1544
13:00	340	363	330	299	1332
14:00	352	308	338	282	1280
15:00	315	284	322	314	1235
16:00	332	344	337	352	1365
17:00	332	408	370	333	1443
18:00	370	362	350	312	1394
19:00	262	276	258	266	1062
20:00	238	220	220	244	922
21:00	197	234	188	177	796
22:00	170	114	112	110	506
23:00	87	79	66	61	293
				TOTAL:	19945

The A.M. peak hour from 7:15 to 8:15 is 1096

The P.M. peak hour from 17:15 to 18:15 is 1481

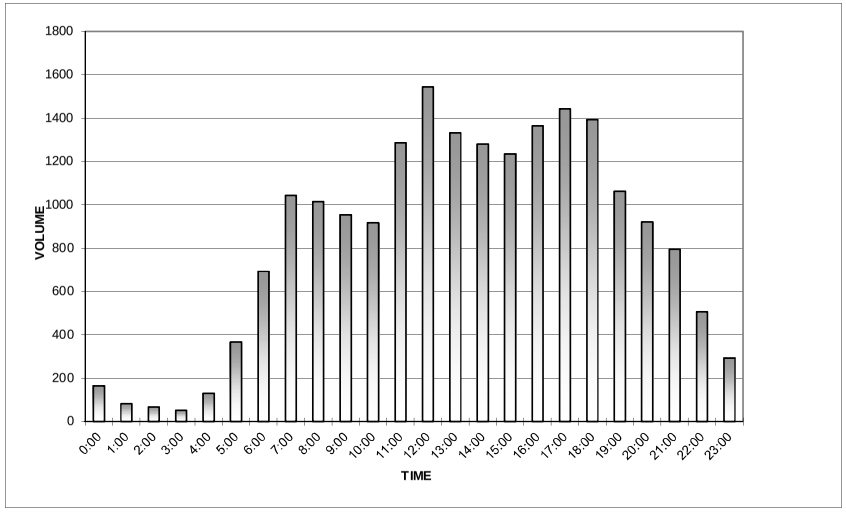

EB Beltway Drive West of Midway Road

Date Began:
6/23/2015

TIME	0:00	0:15	0:30	0:45	TOTAL
0:00	1	0	0	0	1
1:00	0	1	0	0	1
2:00	0	0	0	0	0
3:00	0	0	0	0	0
4:00	0	2	1	2	5
5:00	3	0	3	9	15
6:00	5	6	16	15	42
7:00	22	20	39	48	129
8:00	37	29	40	32	138
9:00	28	30	22	32	112
10:00	30	20	22	20	92
11:00	29	20	30	35	114
12:00	30	47	33	32	142
13:00	31	25	26	13	95
14:00	22	23	16	24	85
15:00	18	26	24	31	99
16:00	29	19	33	37	118
17:00	31	35	39	44	149
18:00	39	43	31	25	138
19:00	30	25	22	10	87
20:00	25	9	17	6	57
21:00	15	10	8	4	37
22:00	6	4	3	3	16
23:00	2	1	8	0	11
				TOTAL:	1683

The A.M. peak hour from 7:45 to 8:45 is 154

The P.M. peak hour from 17:30 to 18:30 is 165

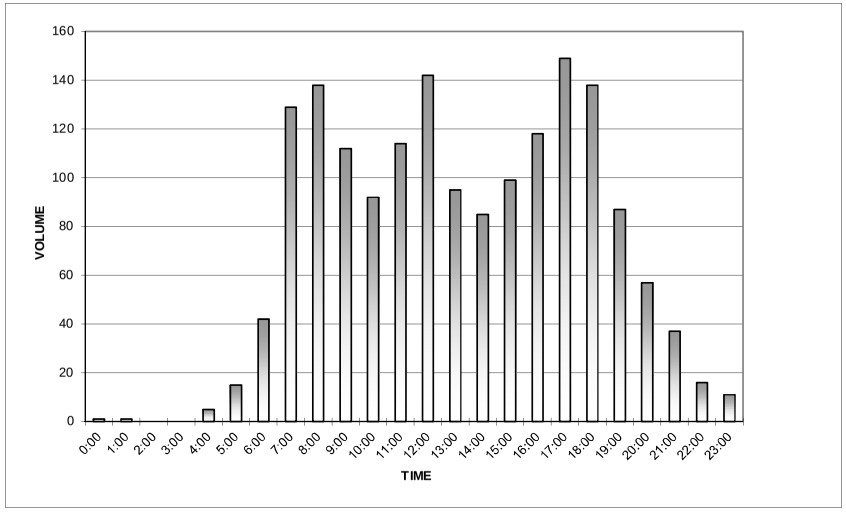

WB Beltway Drive West of Midway Road

Date Began:
6/23/2015

TIME	0:00	0:15	0:30	0:45	TOTAL
0:00	5	4	1	1	11
1:00	2	0	0	0	2
2:00	0	0	0	1	1
3:00	0	1	0	0	1
4:00	0	0	1	0	1
5:00	1	2	2	4	9
6:00	5	5	5	15	30
7:00	14	16	20	29	79
8:00	19	18	22	15	74
9:00	21	25	18	16	80
10:00	26	15	18	20	79
11:00	18	20	34	44	116
12:00	30	41	45	28	144
13:00	41	40	37	27	145
14:00	28	25	26	30	109
15:00	33	31	38	28	130
16:00	25	34	49	35	143
17:00	48	40	66	58	212
18:00	58	32	48	26	164
19:00	37	35	35	31	138
20:00	30	25	15	24	94
21:00	22	22	16	14	74
22:00	16	15	9	5	45
23:00	9	6	12	5	32
				TOTAL:	1913

The A.M. peak hour from 7:45 to 8:45 is 88

The P.M. peak hour from 17:15 to 18:15 is 222

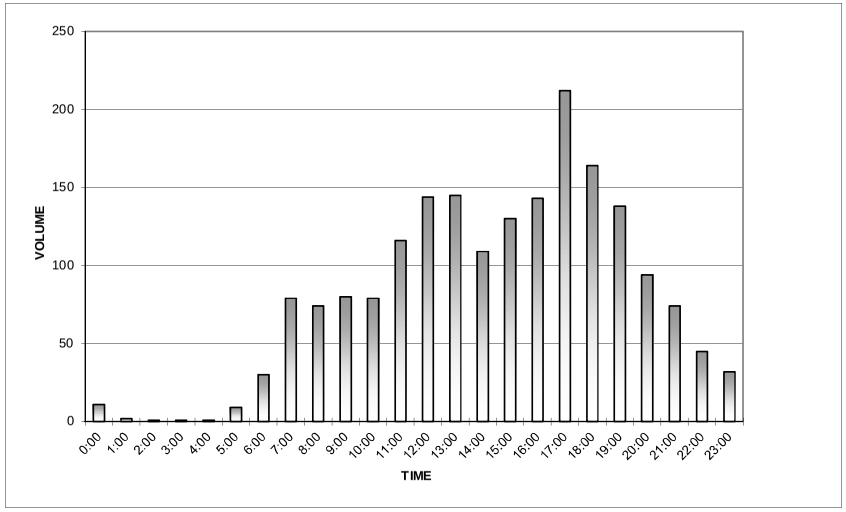

NB Midway Road South of Belt Line Road

Date Began:
6/23/2015

TIME	0:00	0:15	0:30	0:45	TOTAL
0:00	50	28	34	26	138
1:00	21	18	13	11	63
2:00	12	18	10	9	49
3:00	6	11	6	8	31
4:00	9	10	19	28	66
5:00	38	40	74	116	268
6:00	136	164	212	262	774
7:00	192	222	254	236	904
8:00	241	232	245	254	972
9:00	258	223	178	222	881
10:00	212	194	202	219	827
11:00	266	294	360	344	1264
12:00	376	319	326	308	1329
13:00	347	273	284	273	1177
14:00	307	256	261	273	1097
15:00	277	279	350	329	1235
16:00	406	381	484	486	1757
17:00	516	574	491	498	2079
18:00	556	454	370	338	1718
19:00	302	249	250	203	1004
20:00	220	146	206	178	750
21:00	176	135	96	102	509
22:00	90	79	76	46	291
23:00	56	50	35	24	165
				TOTAL:	19348

The A.M. peak hour from 8:15 to 9:15 is 989

The P.M. peak hour from 17:15 to 18:15 is 2119

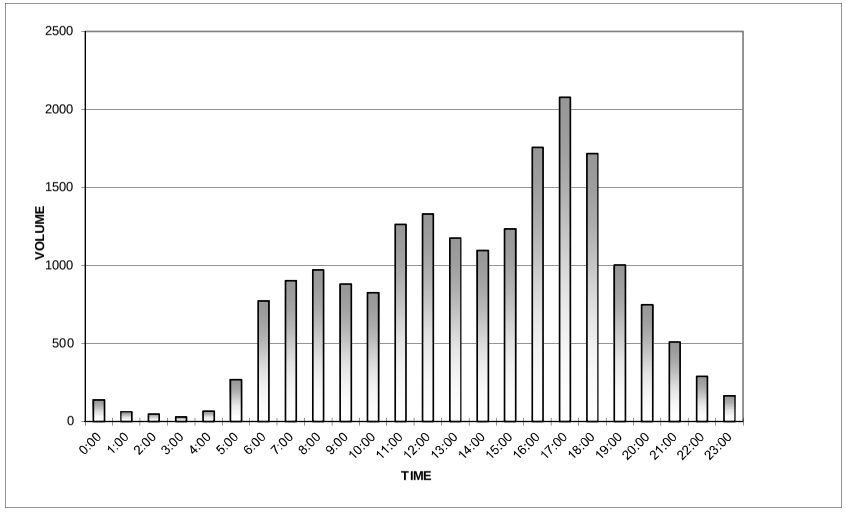

SB Midway Road South of Belt Line Road

Date Began:
6/23/2015

TIME	0:00	0:15	0:30	0:45	TOTAL
0:00	44	50	35	22	151
1:00	27	21	15	16	79
2:00	9	10	39	16	74
3:00	14	11	13	11	49
4:00	11	16	28	36	91
5:00	33	54	76	95	258
6:00	118	136	247	356	857
7:00	360	491	554	518	1923
8:00	536	525	508	524	2093
9:00	352	330	340	278	1300
10:00	274	206	212	249	941
11:00	225	228	284	258	995
12:00	337	325	346	313	1321
13:00	321	322	277	299	1219
14:00	280	268	283	317	1148
15:00	260	274	346	282	1162
16:00	323	319	364	352	1358
17:00	393	386	428	434	1641
18:00	388	409	296	274	1367
19:00	286	238	176	220	920
20:00	172	160	180	162	674
21:00	146	154	119	109	528
22:00	122	114	94	100	430
23:00	67	70	63	46	246
				TOTAL:	20825

The A.M. peak hour from 7:30 to 8:30 is 2133
The P.M. peak hour from 17:30 to 18:30 is 1659

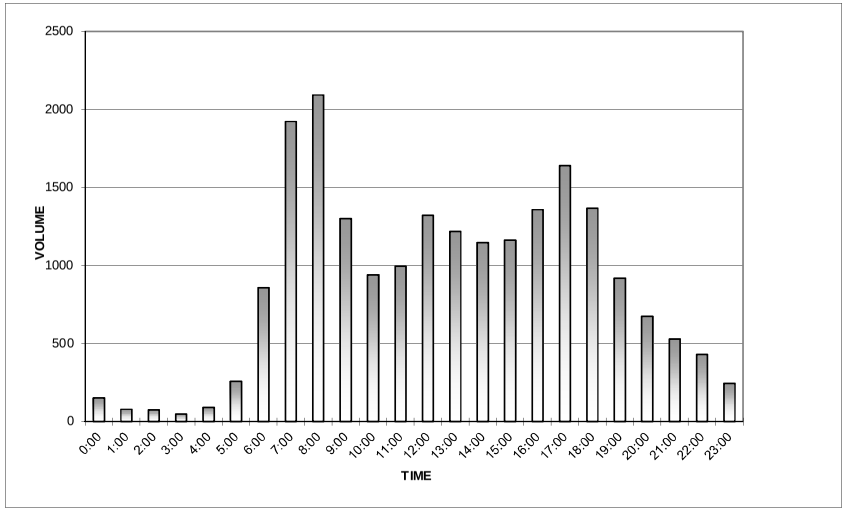

NB Runyon Road South of Belt Line Road

Date Began:
6/23/2015

TIME	0:00	0:15	0:30	0:45	TOTAL
0:00	10	4	4	0	18
1:00	1	2	0	0	3
2:00	0	0	2	1	3
3:00	0	0	0	0	0
4:00	2	1	1	0	4
5:00	0	0	0	2	2
6:00	3	2	2	3	10
7:00	4	8	7	13	32
8:00	8	7	5	10	30
9:00	8	5	14	9	36
10:00	9	7	8	15	39
11:00	21	11	25	22	79
12:00	28	29	23	34	114
13:00	29	16	26	23	94
14:00	17	18	20	24	79
15:00	22	15	30	18	85
16:00	28	19	31	25	103
17:00	29	27	19	26	101
18:00	20	29	19	25	93
19:00	21	25	24	19	89
20:00	23	17	21	8	69
21:00	6	3	5	7	21
22:00	0	1	1	3	5
23:00	3	3	7	1	14
				TOTAL:	1123

The A.M. peak hour from 9:15 to 10:15 is 37
The P.M. peak hour from 16:30 to 17:30 is 112

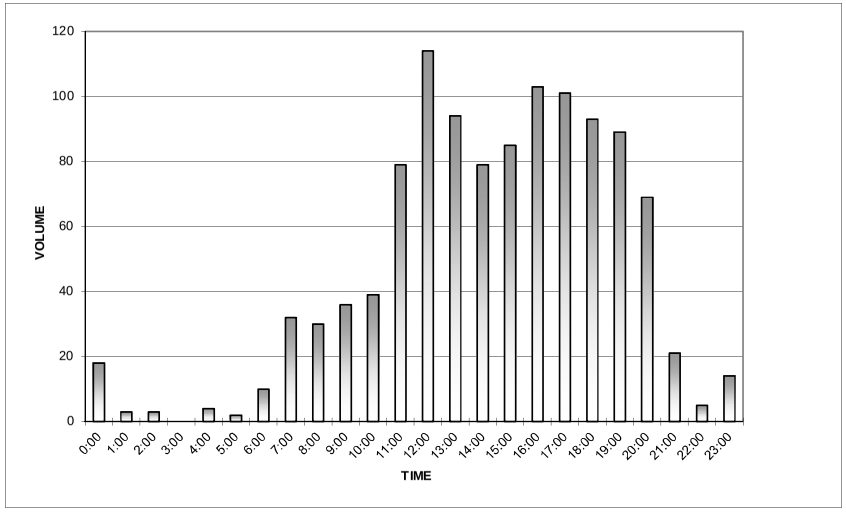

SB Runyon Road South of Belt Line Road

Date Began:
6/23/2015

TIME	0:00	0:15	0:30	0:45	TOTAL
0:00	2	0	0	0	2
1:00	1	0	2	0	3
2:00	0	0	0	1	1
3:00	0	0	0	1	1
4:00	0	1	0	0	1
5:00	0	0	0	3	3
6:00	1	1	7	6	15
7:00	8	6	10	7	31
8:00	6	7	4	4	21
9:00	8	6	3	6	23
10:00	7	6	11	1	25
11:00	11	13	14	8	46
12:00	13	11	12	8	44
13:00	9	9	12	13	43
14:00	14	9	10	5	38
15:00	9	10	2	8	29
16:00	9	11	7	12	39
17:00	11	13	4	13	41
18:00	11	13	8	9	41
19:00	4	8	12	8	32
20:00	7	5	4	10	26
21:00	8	6	2	1	17
22:00	7	1	4	3	15
23:00	3	1	3	1	8
				TOTAL:	545

The A.M. peak hour from 7:00 to 8:00 is 31

The P.M. peak hour from 17:45 to 18:45 is 45

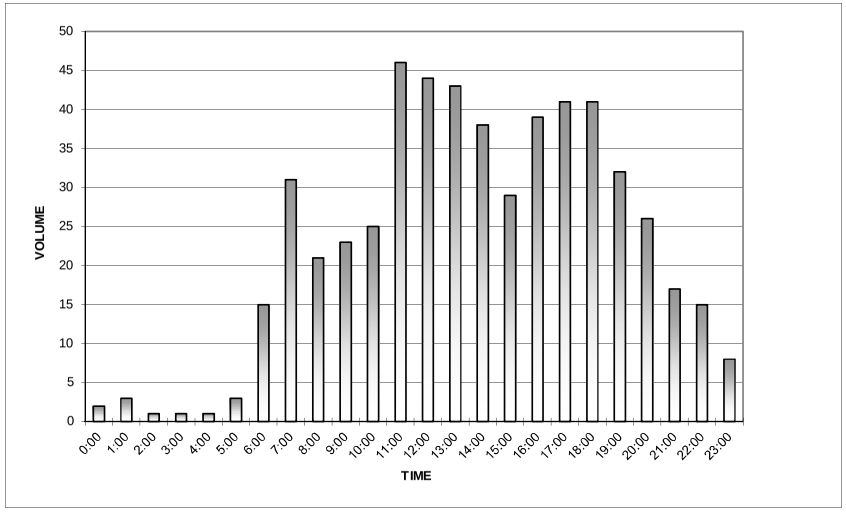

NB Surveyor Boulevard South of Belt Line Road

Date Began:
6/23/2015

TIME	0:00	0:15	0:30	0:45	TOTAL
0:00	3	0	1	0	4
1:00	0	1	1	0	2
2:00	0	0	0	1	1
3:00	1	0	1	0	2
4:00	1	1	0	0	2
5:00	1	1	5	3	10
6:00	9	11	12	8	40
7:00	24	30	26	43	123
8:00	27	29	32	23	111
9:00	27	18	23	21	89
10:00	18	18	26	22	84
11:00	35	37	44	45	161
12:00	51	59	37	54	201
13:00	61	40	36	35	172
14:00	27	21	22	25	95
15:00	21	24	26	28	99
16:00	44	41	40	52	177
17:00	56	64	62	62	244
18:00	72	38	47	34	191
19:00	37	40	26	17	120
20:00	33	28	11	15	87
21:00	17	11	9	7	44
22:00	12	6	4	1	23
23:00	4	2	3	3	12
				TOTAL:	2094

The A.M. peak hour from 7:45 to 8:45 is 131

The P.M. peak hour from 17:15 to 18:15 is 260

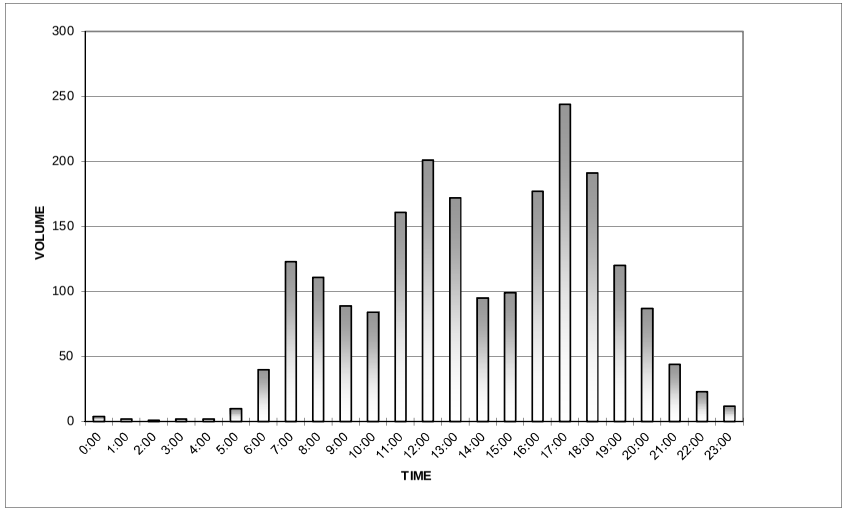

CJ Hensch & Associates, Inc.
kh@cjhensch.com
5215 Sycamore Ave

Pasadena, Texas, United States 77503
281-487-5417

Count Name: Belt Line Road at Beltway Drive
Site Code: 5
Start Date: 06/23/2015

SB Surveyor Boulevard South of Belt Line Road

Date Began:
6/23/2015

TIME	0:00	0:15	0:30	0:45	TOTAL
0:00	0	2	1	1	4
1:00	0	3	0	0	3
2:00	3	0	0	0	3
3:00	1	1	0	0	2
4:00	1	1	1	2	5
5:00	5	2	0	4	11
6:00	14	5	5	21	45
7:00	17	33	35	46	131
8:00	38	40	33	47	158
9:00	39	42	22	25	128
10:00	28	18	22	16	84
11:00	23	24	29	26	102
12:00	30	36	32	40	138
13:00	40	45	34	34	153
14:00	29	28	27	28	112
15:00	28	21	28	24	101
16:00	23	41	42	35	141
17:00	42	55	63	56	216
18:00	43	30	43	29	145
19:00	26	23	24	22	95
20:00	22	16	21	17	76
21:00	8	25	14	9	56
22:00	11	4	5	6	26
23:00	4	6	5	3	18
				TOTAL:	1953

The A.M. peak hour from 8:30 to 9:30 is 161
The P.M. peak hour from 17:15 to 18:15 is 217

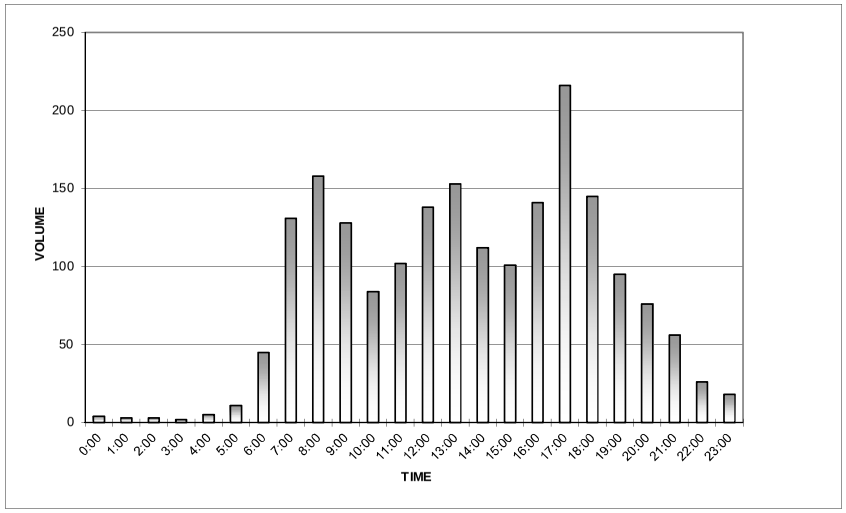

Turning Movement Data

Start Time	Belt Line Road Westbound					Beltway Drive Northbound					Belt Line Road Eastbound					
	Left	Thru	U-Turn	Peds	App. Total	Left	Right	U-Turn	Peds	App. Total	Thru	Right	U-Turn	Peds	App. Total	Int. Total
7:00 AM	15	267	0	0	282	2	7	0	1	9	258	1	0	0	259	550
7:15 AM	25	361	0	0	386	0	10	0	1	10	337	1	1	0	339	735
7:30 AM	16	349	0	0	365	1	14	0	1	15	398	2	2	0	402	782
7:45 AM	18	413	0	0	431	3	22	0	1	25	448	2	2	0	452	908
Hourly Total	74	1390	0	0	1464	6	53	0	4	59	1441	6	5	0	1452	2975
8:00 AM	28	353	0	0	381	2	17	0	1	19	404	1	0	0	405	805
8:15 AM	28	363	0	0	391	2	17	0	0	19	448	7	0	0	455	865
8:30 AM	30	376	0	0	406	1	14	0	0	15	407	8	0	0	415	836
8:45 AM	33	360	0	0	393	1	16	0	1	17	439	8	0	0	447	857
Hourly Total	119	1452	0	0	1571	6	64	0	2	70	1698	24	0	0	1722	3363
9:00 AM	0	0	0	0	0	0	0	0	0	0	0	0	0	0	0	0
*** BREAK ***	-	-	-	-	-	-	-	-	-	-	-	-	-	-	-	-
Hourly Total	0	0	0	0	0	0	0	0	0	0	0	0	0	0	0	0
4:30 PM	14	399	0	0	413	5	26	0	0	31	452	5	4	0	461	905
4:45 PM	20	398	2	0	420	8	32	0	0	40	468	8	6	0	482	942
Hourly Total	34	797	2	0	833	13	58	0	0	71	920	13	10	0	943	1847
5:00 PM	24	440	0	0	464	5	40	0	0	45	455	4	4	0	463	972
5:15 PM	23	468	0	0	491	5	51	1	2	57	410	7	5	2	422	970
5:30 PM	18	439	0	0	457	9	47	0	0	56	449	8	3	0	460	973
5:45 PM	20	482	1	0	503	7	52	0	0	59	434	8	4	0	446	1008
Hourly Total	85	1829	1	0	1915	26	190	1	2	217	1748	27	16	2	1791	3923
6:00 PM	21	438	1	0	460	4	44	0	0	48	460	3	3	0	466	974
6:15 PM	36	423	0	0	459	7	33	0	3	40	426	3	6	0	435	934
6:30 PM	0	0	0	0	0	0	0	0	0	0	1	0	0	0	1	1
Grand Total	369	6329	4	0	6702	62	442	1	11	505	6694	76	40	2	6810	14017
Approach %	5.5	94.4	0.1	-	-	12.3	87.5	0.2	-	-	98.3	1.1	0.6	-	-	-
Total %	2.6	45.2	0.0	-	47.8	0.4	3.2	0.0	-	3.6	47.8	0.5	0.3	-	48.6	-
All Vehicles (no classification)	369	6329	4	-	6702	62	442	1	-	505	6694	76	40	-	6810	14017
% All Vehicles (no classification)	100.0	100.0	100.0	-	100.0	100.0	100.0	100.0	-	100.0	100.0	100.0	100.0	-	100.0	100.0
Pedestrians	-	-	-	0	-	-	-	-	11	-	-	-	-	2	-	-
% Pedestrians	-	-	-	-	-	-	-	-	100.0	-	-	-	-	100.0	-	-

CJ Hensch & Associates, Inc.
kh@cjhensch.com
5215 Sycamore Ave

Pasadena, Texas, United States 77503
281-487-5417

Count Name: Belt Line Road at Beltway Drive
Site Code: 5
Start Date: 06/23/2015

Turning Movement Peak Hour Data (7:45 AM)

Start Time	Belt Line Road Westbound					Beltway Drive Northbound					Belt Line Road Eastbound					
	Left	Thru	U-Turn	Peds	App. Total	Left	Right	U-Turn	Peds	App. Total	Thru	Right	U-Turn	Peds	App. Total	Int. Total
7:45 AM	18	413	0	0	431	3	22	0	1	25	448	2	2	0	452	908
8:00 AM	28	353	0	0	381	2	17	0	1	19	404	1	0	0	405	805
8:15 AM	28	363	0	0	391	2	17	0	0	19	448	7	0	0	455	865
8:30 AM	30	376	0	0	406	1	14	0	0	15	407	8	0	0	415	836
Total	104	1505	0	0	1609	8	70	0	2	78	1707	18	2	0	1727	3414
Approach %	6.5	93.5	0.0	-	-	10.3	89.7	0.0	-	-	98.8	1.0	0.1	-	-	-
Total %	3.0	44.1	0.0	-	47.1	0.2	2.1	0.0	-	2.3	50.0	0.5	0.1	-	50.6	-
PHF	0.867	0.911	0.000	-	0.933	0.667	0.795	0.000	-	0.780	0.953	0.563	0.250	-	0.949	0.940
All Vehicles (no classification)	104	1505	0	-	1609	8	70	0	-	78	1707	18	2	-	1727	3414
% All Vehicles (no classification)	100.0	100.0	-	-	100.0	100.0	100.0	-	-	100.0	100.0	100.0	100.0	-	100.0	100.0
Pedestrians	-	-	-	0	-	-	-	-	2	-	-	-	-	0	-	-
% Pedestrians	-	-	-	-	-	-	-	-	100.0	-	-	-	-	-	-	-

CJ Hensch & Associates, Inc.
kh@cjhensch.com
5215 Sycamore Ave

Pasadena, Texas, United States 77503
281-487-5417

Count Name: Belt Line Road at Beltway Drive
Site Code: 5
Start Date: 06/23/2015

Turning Movement Peak Hour Data (5:15 PM)

Start Time	Belt Line Road Westbound					Beltway Drive Northbound					Belt Line Road Eastbound					
	Left	Thru	U-Turn	Peds	App. Total	Left	Right	U-Turn	Peds	App. Total	Thru	Right	U-Turn	Peds	App. Total	Int. Total
5:15 PM	23	468	0	0	491	5	51	1	2	57	410	7	5	2	422	970
5:30 PM	18	439	0	0	457	9	47	0	0	56	449	8	3	0	460	973
5:45 PM	20	482	1	0	503	7	52	0	0	59	434	8	4	0	446	1008
6:00 PM	21	438	1	0	460	4	44	0	0	48	460	3	3	0	466	974
Total	82	1827	2	0	1911	25	194	1	2	220	1753	26	15	2	1794	3925
Approach %	4.3	95.6	0.1	-	-	11.4	88.2	0.5	-	-	97.7	1.4	0.8	-	-	-
Total %	2.1	46.5	0.1	-	48.7	0.6	4.9	0.0	-	5.6	44.7	0.7	0.4	-	45.7	-
PHF	0.891	0.948	0.500	-	0.950	0.694	0.933	0.250	-	0.932	0.953	0.813	0.750	-	0.962	0.973
All Vehicles (no classification)	82	1827	2	-	1911	25	194	1	-	220	1753	26	15	-	1794	3925
% All Vehicles (no classification)	100.0	100.0	100.0	-	100.0	100.0	100.0	100.0	-	100.0	100.0	100.0	100.0	-	100.0	100.0
Pedestrians	-	-	-	0	-	-	-	-	2	-	-	-	-	2	-	-
% Pedestrians	-	-	-	-	-	-	-	-	100.0	-	-	-	-	100.0	-	-

CJ Hensch & Associates, Inc.
kh@cjhensch.com
5215 Sycamore Ave

Pasadena, Texas, United States 77503
281-487-5417

Count Name: Belt Line Road at Midway Road
Site Code: 4
Start Date: 06/23/2015

Turning Movement Data

Start Time	Midway Road Southbound						Belt Line Road Westbound						Midway Road Northbound						Belt Line Road Eastbound						
	Left	Thru	Right	U-Turn	Peds	App. Total	Left	Thru	Right	U-Turn	Peds	App. Total	Left	Thru	Right	U-Turn	Peds	App. Total	Left	Thru	Right	U-Turn	Peds	App. Total	Int. Total
7:00 AM	64	264	18	0	0	346	58	184	55	0	0	297	30	141	22	0	1	193	19	163	58	0	2	240	1076
7:15 AM	93	399	32	0	0	524	79	221	69	0	0	369	29	131	52	0	4	212	25	211	59	0	0	295	1400
7:30 AM	117	443	29	0	0	589	72	212	62	0	0	346	43	158	58	0	3	259	33	228	80	0	0	341	1535
7:45 AM	112	386	32	0	0	530	88	228	107	0	0	423	26	149	59	0	0	234	44	272	82	0	0	398	1585
Hourly Total	386	1492	111	0	0	1989	297	845	293	0	0	1435	128	579	191	0	8	898	121	874	279	0	2	1274	5596
8:00 AM	126	454	41	0	1	621	63	210	63	0	1	336	29	153	50	0	1	232	29	217	43	0	3	289	1478
8:15 AM	119	407	40	0	2	566	76	174	95	0	1	345	34	143	63	0	0	240	27	274	68	0	1	369	1520
8:30 AM	116	372	51	0	2	539	87	191	80	0	0	358	35	130	64	0	0	229	30	288	72	0	1	390	1516
8:45 AM	118	393	38	0	0	549	69	156	72	1	0	298	42	138	73	0	0	253	20	229	75	0	0	324	1424
Hourly Total	479	1626	170	0	5	2275	295	731	310	1	2	1337	140	564	250	0	1	954	106	1008	258	0	5	1372	5938
9:00 AM	0	0	0	0	0	0	1	0	0	0	0	1	0	0	1	0	0	1	0	0	0	0	0	0	2
*** BREAK ***	-	-	-	-	-	-	-	-	-	-	-	-	-	-	-	-	-	-	-	-	-	-	-	-	-
Hourly Total	0	0	0	0	0	0	1	0	0	0	0	1	0	0	1	0	0	1	0	0	0	0	0	0	2
4:30 PM	96	273	38	0	0	407	67	219	73	0	0	359	56	342	88	0	0	486	47	260	50	0	0	357	1609
4:45 PM	79	241	51	0	1	371	82	253	97	0	1	432	54	341	84	0	0	479	58	340	61	1	0	460	1742
Hourly Total	175	514	89	0	1	778	149	472	170	0	1	791	110	683	172	0	0	965	105	600	111	1	0	817	3351
5:00 PM	104	289	42	0	2	435	72	270	76	0	1	418	53	346	103	0	1	502	39	259	73	0	3	371	1726
5:15 PM	69	279	40	0	0	388	70	284	98	1	0	453	60	419	72	0	1	551	50	272	69	0	4	391	1783
5:30 PM	108	271	49	0	2	428	87	263	95	0	0	445	54	328	84	0	0	466	57	345	64	0	2	466	1805
5:45 PM	87	296	26	0	0	409	97	245	91	0	5	433	80	358	87	0	6	525	31	278	72	0	2	381	1748
Hourly Total	368	1135	157	0	4	1660	326	1062	360	1	6	1749	247	1451	346	0	8	2044	177	1154	278	0	11	1609	7062
6:00 PM	89	240	39	0	0	368	50	279	99	1	1	429	65	366	84	0	1	515	35	321	77	0	3	433	1745
6:15 PM	88	295	49	0	0	432	32	288	83	1	0	404	56	308	95	0	0	459	11	329	62	0	0	402	1697
Grand Total	1585	5302	615	0	10	7502	1150	3677	1315	4	10	6146	746	3951	1139	0	18	5836	555	4286	1065	1	21	5907	25391
Approach %	21.1	70.7	8.2	0.0	-	-	18.7	59.8	21.4	0.1	-	-	12.8	67.7	19.5	0.0	-	-	9.4	72.6	18.0	0.0	-	-	-
Total %	6.2	20.9	2.4	0.0	-	29.5	4.5	14.5	5.2	0.0	-	24.2	2.9	15.6	4.5	0.0	-	23.0	2.2	16.9	4.2	0.0	-	23.3	-
All Vehicles (no classification)	1585	5302	615	0	-	7502	1150	3677	1315	4	-	6146	746	3951	1139	0	-	5836	555	4286	1065	1	-	5907	25391
% All Vehicles (no classification)	100.0	100.0	100.0	-	-	100.0	100.0	100.0	100.0	100.0	-	100.0	100.0	100.0	100.0	-	-	100.0	100.0	100.0	100.0	100.0	-	100.0	100.0
Pedestrians	-	-	-	-	10	-	-	-	-	-	10	-	-	-	-	-	18	-	-	-	-	-	21	-	-
% Pedestrians	-	-	-	-	100.0	-	-	-	-	-	100.0	-	-	-	-	-	100.0	-	-	-	-	-	100.0	-	-

CJ Hensch & Associates, Inc.
kh@cjhensch.com
5215 Sycamore Ave

Pasadena, Texas, United States 77503
281-487-5417

Count Name: Belt Line Road at Midway Road
Site Code: 4
Start Date: 06/23/2015

Turning Movement Peak Hour Data (7:30 AM)

Start Time	Midway Road Southbound						Belt Line Road Westbound						Midway Road Northbound						Belt Line Road Eastbound						
	Left	Thru	Right	U-Turn	Peds	App. Total	Left	Thru	Right	U-Turn	Peds	App. Total	Left	Thru	Right	U-Turn	Peds	App. Total	Left	Thru	Right	U-Turn	Peds	App. Total	Int. Total
7:30 AM	117	443	29	0	0	589	72	212	62	0	0	346	43	158	58	0	3	259	33	228	80	0	0	341	1535
7:45 AM	112	386	32	0	0	530	88	228	107	0	0	423	26	149	59	0	0	234	44	272	82	0	0	398	1585
8:00 AM	126	454	41	0	1	621	63	210	63	0	1	336	29	153	50	0	1	232	29	217	43	0	3	289	1478
8:15 AM	119	407	40	0	2	566	76	174	95	0	1	345	34	143	63	0	0	240	27	274	68	0	1	369	1520
Total	474	1690	142	0	3	2306	299	824	327	0	2	1450	132	603	230	0	4	965	133	991	273	0	4	1397	6118
Approach %	20.6	73.3	6.2	0.0	-	-	20.6	56.8	22.6	0.0	-	-	13.7	62.5	23.8	0.0	-	-	9.5	70.9	19.5	0.0	-	-	-
Total %	7.7	27.6	2.3	0.0	-	37.7	4.9	13.5	5.3	0.0	-	23.7	2.2	9.9	3.8	0.0	-	15.8	2.2	16.2	4.5	0.0	-	22.8	-
PHF	0.940	0.931	0.866	0.000	-	0.928	0.849	0.904	0.764	0.000	-	0.857	0.767	0.954	0.913	0.000	-	0.931	0.756	0.904	0.832	0.000	-	0.878	0.965
All Vehicles (no classification)	474	1690	142	0	-	2306	299	824	327	0	-	1450	132	603	230	0	-	965	133	991	273	0	-	1397	6118
% All Vehicles (no classification)	100.0	100.0	100.0	-	-	100.0	100.0	100.0	100.0	-	-	100.0	100.0	100.0	100.0	-	-	100.0	100.0	100.0	100.0	-	-	100.0	100.0
Pedestrians	-	-	-	-	3	-	-	-	-	-	2	-	-	-	-	-	4	-	-	-	-	-	4	-	-
% Pedestrians	-	-	-	-	100.0	-	-	-	-	-	100.0	-	-	-	-	-	100.0	-	-	-	-	-	100.0	-	-

CJ Hensch & Associates, Inc.
kh@cjhensch.com
5215 Sycamore Ave

Pasadena, Texas, United States 77503
281-487-5417

Count Name: Belt Line Road at Midway Road
Site Code: 4
Start Date: 06/23/2015

Turning Movement Peak Hour Data (5:15 PM)

Start Time	Midway Road Southbound						Belt Line Road Westbound						Midway Road Northbound						Belt Line Road Eastbound						
	Left	Thru	Right	U-Turn	Peds	App. Total	Left	Thru	Right	U-Turn	Peds	App. Total	Left	Thru	Right	U-Turn	Peds	App. Total	Left	Thru	Right	U-Turn	Peds	App. Total	Int. Total
5:15 PM	69	279	40	0	0	388	70	284	98	1	0	453	60	419	72	0	1	551	50	272	69	0	4	391	1783
5:30 PM	108	271	49	0	2	428	87	263	95	0	0	445	54	328	84	0	0	466	57	345	64	0	2	466	1805
5:45 PM	87	296	26	0	0	409	97	245	91	0	5	433	80	358	87	0	6	525	31	278	72	0	2	381	1748
6:00 PM	89	240	39	0	0	368	50	279	99	1	1	429	65	366	84	0	1	515	35	321	77	0	3	433	1745
Total	353	1086	154	0	2	1593	304	1071	383	2	6	1760	259	1471	327	0	8	2057	173	1216	282	0	11	1671	7081
Approach %	22.2	68.2	9.7	0.0	-	-	17.3	60.9	21.8	0.1	-	-	12.6	71.5	15.9	0.0	-	-	10.4	72.8	16.9	0.0	-	-	-
Total %	5.0	15.3	2.2	0.0	-	22.5	4.3	15.1	5.4	0.0	-	24.9	3.7	20.8	4.6	0.0	-	29.0	2.4	17.2	4.0	0.0	-	23.6	-
PHF	0.817	0.917	0.786	0.000	-	0.930	0.784	0.943	0.967	0.500	-	0.971	0.809	0.878	0.940	0.000	-	0.933	0.759	0.881	0.916	0.000	-	0.896	0.981
All Vehicles (no classification)	353	1086	154	0	-	1593	304	1071	383	2	-	1760	259	1471	327	0	-	2057	173	1216	282	0	-	1671	7081
% All Vehicles (no classification)	100.0	100.0	100.0	-	-	100.0	100.0	100.0	100.0	100.0	-	100.0	100.0	100.0	100.0	-	-	100.0	100.0	100.0	100.0	-	-	100.0	100.0
Pedestrians	-	-	-	-	2	-	-	-	-	-	6	-	-	-	-	-	8	-	-	-	-	-	11	-	-
% Pedestrians	-	-	-	-	100.0	-	-	-	-	-	100.0	-	-	-	-	-	100.0	-	-	-	-	-	100.0	-	-

CJ Hensch & Associates, Inc.
kh@cjhensch.com
5215 Sycamore Ave

Pasadena, Texas, United States 77503
281-487-5417

Count Name: Belt Line Road at Runyon Road
Site Code: 2
Start Date: 06/23/2015

Turning Movement Data

Start Time	Runyon Road Southbound						Belt Line Road Westbound						Runyon Road Northbound						Belt Line Road Eastbound						
	Left	Thru	Right	U-Turn	Peds	App. Total	Left	Thru	Right	U-Turn	Peds	App. Total	Left	Thru	Right	U-Turn	Peds	App. Total	Left	Thru	Right	U-Turn	Peds	App. Total	Int. Total
7:00 AM	0	0	3	0	0	3	4	211	1	0	0	216	1	0	2	0	1	3	1	239	4	0	0	244	466
7:15 AM	1	0	0	0	0	1	5	252	1	0	0	258	5	0	6	0	0	11	1	316	1	0	0	318	588
7:30 AM	4	1	2	0	0	7	4	289	0	0	0	293	1	0	6	0	0	7	3	313	5	0	0	321	628
7:45 AM	2	0	0	0	1	2	4	270	0	0	0	274	5	0	4	0	0	9	0	390	3	0	0	393	678
Hourly Total	7	1	5	0	1	13	17	1022	2	0	0	1041	12	0	18	0	1	30	5	1258	13	0	0	1276	2360
8:00 AM	3	0	0	0	1	3	5	246	0	0	0	251	6	0	5	0	0	11	3	310	2	0	0	315	580
8:15 AM	0	0	0	0	0	0	7	249	0	0	0	256	6	0	5	0	0	11	2	373	2	0	0	377	644
8:30 AM	1	1	0	0	1	2	3	252	3	0	1	258	1	0	5	0	0	6	4	356	1	0	0	361	627
8:45 AM	3	0	1	0	0	4	3	216	1	1	0	221	9	0	2	0	0	11	6	321	2	0	0	329	565
Hourly Total	7	1	1	0	2	9	18	963	4	1	1	986	22	0	17	0	0	39	15	1360	7	0	0	1382	2416
9:00 AM	0	0	0	0	0	0	0	0	0	0	0	0	0	0	0	0	0	0	0	0	0	0	0	0	0
*** BREAK ***	-	-	-	-	-	-	-	-	-	-	-	-	-	-	-	-	-	-	-	-	-	-	-	-	-
Hourly Total	0	0	0	0	0	0	0	0	0	0	0	0	0	0	0	0	0	0	0	0	0	0	0	0	0
4:30 PM	7	0	5	0	1	12	8	294	5	0	0	307	29	0	10	0	0	39	0	358	3	0	0	361	719
4:45 PM	3	0	5	0	0	8	9	324	2	1	0	336	16	0	12	0	0	28	3	453	9	0	0	465	837
Hourly Total	10	0	10	0	1	20	17	618	7	1	0	643	45	0	22	0	0	67	3	811	12	0	0	826	1556
5:00 PM	3	0	3	0	0	6	11	289	2	0	0	302	23	0	16	0	0	39	6	408	7	0	0	421	768
5:15 PM	4	1	8	0	2	13	10	364	2	1	0	377	24	0	4	0	1	28	4	372	10	0	0	386	804
5:30 PM	7	0	6	0	0	13	7	334	5	2	2	348	11	1	8	0	2	20	2	463	2	0	0	467	848
5:45 PM	8	1	10	0	1	19	8	293	3	1	0	305	22	0	7	0	0	29	3	411	6	0	0	420	773
Hourly Total	22	2	27	0	3	51	36	1280	12	4	2	1332	80	1	35	0	3	116	15	1654	25	0	0	1694	3193
6:00 PM	3	0	5	0	0	8	5	334	4	0	0	343	18	0	6	0	0	24	4	380	8	0	0	392	767
6:15 PM	3	0	3	0	0	6	9	315	1	0	0	325	27	0	7	0	0	34	9	426	8	0	0	443	808
6:30 PM	0	0	0	0	0	0	0	0	0	0	0	0	0	0	0	0	0	0	0	0	0	0	0	0	0
Grand Total	52	4	51	0	7	107	102	4532	30	6	3	4670	204	1	105	0	4	310	51	5889	73	0	0	6013	11100
Approach %	48.6	3.7	47.7	0.0	-	-	2.2	97.0	0.6	0.1	-	-	65.8	0.3	33.9	0.0	-	-	0.8	97.9	1.2	0.0	-	-	-
Total %	0.5	0.0	0.5	0.0	-	1.0	0.9	40.8	0.3	0.1	-	42.1	1.8	0.0	0.9	0.0	-	2.8	0.5	53.1	0.7	0.0	-	54.2	-
All Vehicles (no classification)	52	4	51	0	-	107	102	4532	30	6	-	4670	204	1	105	0	-	310	51	5889	73	0	-	6013	11100
% All Vehicles (no classification)	100.0	100.0	100.0	-	-	100.0	100.0	100.0	100.0	100.0	-	100.0	100.0	100.0	100.0	-	-	100.0	100.0	100.0	100.0	-	-	100.0	100.0
Pedestrians	-	-	-	-	7	-	-	-	-	-	3	-	-	-	-	-	4	-	-	-	-	-	0	-	-
% Pedestrians	-	-	-	-	100.0	-	-	-	-	-	100.0	-	-	-	-	-	100.0	-	-	-	-	-	-	-	-

CJ Hensch & Associates, Inc.
kh@cjhensch.com
5215 Sycamore Ave

Pasadena, Texas, United States 77503
281-487-5417

Count Name: Belt Line Road at Runyon Road
Site Code: 2
Start Date: 06/23/2015

Turning Movement Peak Hour Data (7:30 AM)

Start Time	Runyon Road Southbound						Belt Line Road Westbound						Runyon Road Northbound						Belt Line Road Eastbound						
	Left	Thru	Right	U-Turn	Peds	App. Total	Left	Thru	Right	U-Turn	Peds	App. Total	Left	Thru	Right	U-Turn	Peds	App. Total	Left	Thru	Right	U-Turn	Peds	App. Total	Int. Total
7:30 AM	4	1	2	0	0	7	4	289	0	0	0	293	1	0	6	0	0	7	3	313	5	0	0	321	628
7:45 AM	2	0	0	0	1	2	4	270	0	0	0	274	5	0	4	0	0	9	0	390	3	0	0	393	678
8:00 AM	3	0	0	0	1	3	5	246	0	0	0	251	6	0	5	0	0	11	3	310	2	0	0	315	580
8:15 AM	0	0	0	0	0	0	7	249	0	0	0	256	6	0	5	0	0	11	2	373	2	0	0	377	644
Total	9	1	2	0	2	12	20	1054	0	0	0	1074	18	0	20	0	0	38	8	1386	12	0	0	1406	2530
Approach %	75.0	8.3	16.7	0.0	-	-	1.9	98.1	0.0	0.0	-	-	47.4	0.0	52.6	0.0	-	-	0.6	98.6	0.9	0.0	-	-	-
Total %	0.4	0.0	0.1	0.0	-	0.5	0.8	41.7	0.0	0.0	-	42.5	0.7	0.0	0.8	0.0	-	1.5	0.3	54.8	0.5	0.0	-	55.6	-
PHF	0.563	0.250	0.250	0.000	-	0.429	0.714	0.912	0.000	0.000	-	0.916	0.750	0.000	0.833	0.000	-	0.864	0.667	0.888	0.600	0.000	-	0.894	0.933
All Vehicles (no classification)	9	1	2	0	-	12	20	1054	0	0	-	1074	18	0	20	0	-	38	8	1386	12	0	-	1406	2530
% All Vehicles (no classification)	100.0	100.0	100.0	-	-	100.0	100.0	100.0	-	-	-	100.0	100.0	-	100.0	-	-	100.0	100.0	100.0	100.0	-	-	100.0	100.0
Pedestrians	-	-	-	-	2	-	-	-	-	-	0	-	-	-	-	-	0	-	-	-	-	-	0	-	-
% Pedestrians	-	-	-	-	100.0	-	-	-	-	-	-	-	-	-	-	-	-	-	-	-	-	-	-	-	-

CJ Hensch & Associates, Inc.
kh@cjhensch.com
5215 Sycamore Ave

Pasadena, Texas, United States 77503
281-487-5417

Count Name: Belt Line Road at Runyon Road
Site Code: 2
Start Date: 06/23/2015

Turning Movement Peak Hour Data (4:45 PM)

Start Time	Runyon Road Southbound						Belt Line Road Westbound						Runyon Road Northbound						Belt Line Road Eastbound						
	Left	Thru	Right	U-Turn	Peds	App. Total	Left	Thru	Right	U-Turn	Peds	App. Total	Left	Thru	Right	U-Turn	Peds	App. Total	Left	Thru	Right	U-Turn	Peds	App. Total	Int. Total
4:45 PM	3	0	5	0	0	8	9	324	2	1	0	336	16	0	12	0	0	28	3	453	9	0	0	465	837
5:00 PM	3	0	3	0	0	6	11	289	2	0	0	302	23	0	16	0	0	39	6	408	7	0	0	421	768
5:15 PM	4	1	8	0	2	13	10	364	2	1	0	377	24	0	4	0	1	28	4	372	10	0	0	386	804
5:30 PM	7	0	6	0	0	13	7	334	5	2	2	348	11	1	8	0	2	20	2	463	2	0	0	467	848
Total	17	1	22	0	2	40	37	1311	11	4	2	1363	74	1	40	0	3	115	15	1696	28	0	0	1739	3257
Approach %	42.5	2.5	55.0	0.0	-	-	2.7	96.2	0.8	0.3	-	-	64.3	0.9	34.8	0.0	-	-	0.9	97.5	1.6	0.0	-	-	-
Total %	0.5	0.0	0.7	0.0	-	1.2	1.1	40.3	0.3	0.1	-	41.8	2.3	0.0	1.2	0.0	-	3.5	0.5	52.1	0.9	0.0	-	53.4	-
PHF	0.607	0.250	0.688	0.000	-	0.769	0.841	0.900	0.550	0.500	-	0.904	0.771	0.250	0.625	0.000	-	0.737	0.625	0.916	0.700	0.000	-	0.931	0.960
All Vehicles (no classification)	17	1	22	0	-	40	37	1311	11	4	-	1363	74	1	40	0	-	115	15	1696	28	0	-	1739	3257
% All Vehicles (no classification)	100.0	100.0	100.0	-	-	100.0	100.0	100.0	100.0	100.0	-	100.0	100.0	100.0	100.0	-	-	100.0	100.0	100.0	100.0	-	-	100.0	100.0
Pedestrians	-	-	-	-	2	-	-	-	-	-	2	-	-	-	-	-	3	-	-	-	-	-	0	-	-
% Pedestrians	-	-	-	-	100.0	-	-	-	-	-	100.0	-	-	-	-	-	100.0	-	-	-	-	-	-	-	-

CJ Hensch & Associates, Inc.
kh@cjhensch.com
5215 Sycamore Ave

Pasadena, Texas, United States 77503
281-487-5417

Count Name: Belt Line Road at Sam's Club Northwest Driveway (median opening)
Site Code: 3
Start Date: 06/23/2015

Turning Movement Data

Start Time	Driveway Southbound						Belt Line Road Westbound						Sam's Club NW Driveway Northbound						Belt Line Road Eastbound						
	Left	Thru	Right	U-Turn	Peds	App. Total	Left	Thru	Right	U-Turn	Peds	App. Total	Left	Thru	Right	U-Turn	Peds	App. Total	Left	Thru	Right	U-Turn	Peds	App. Total	Int. Total
7:00 AM	0	0	0	0	0	0	10	203	0	1	0	214	0	0	4	0	1	4	1	227	2	1	0	231	449
7:15 AM	0	0	1	0	0	1	6	263	0	0	0	269	0	0	9	0	0	9	1	326	11	0	0	338	617
7:30 AM	0	0	0	0	0	0	8	255	0	2	0	265	0	0	11	0	0	11	0	307	4	0	0	311	587
7:45 AM	0	0	1	0	0	1	9	259	1	0	0	269	0	0	5	0	0	5	4	388	11	0	0	403	678
Hourly Total	0	0	2	0	0	2	33	980	1	3	0	1017	0	0	29	0	1	29	6	1248	28	1	0	1283	2331
8:00 AM	0	0	1	0	1	1	9	259	0	1	0	269	0	0	6	0	0	6	3	322	12	0	0	337	613
8:15 AM	0	0	0	0	0	0	9	223	0	0	0	232	0	1	6	0	0	7	2	386	8	0	0	396	635
8:30 AM	0	0	0	0	0	0	13	263	2	0	0	278	0	1	7	0	0	8	3	396	3	2	0	404	690
8:45 AM	0	0	1	0	0	1	19	208	2	1	0	230	0	0	7	0	0	7	1	340	8	2	0	351	589
Hourly Total	0	0	2	0	1	2	50	953	4	2	0	1009	0	2	26	0	0	28	9	1444	31	4	0	1488	2527
9:00 AM	0	0	0	0	0	0	0	0	0	0	0	0	0	0	0	0	0	0	0	0	0	0	0	0	0
*** BREAK ***	-	-	-	-	-	-	-	-	-	-	-	-	-	-	-	-	-	-	-	-	-	-	-	-	-
Hourly Total	0	0	0	0	0	0	0	0	0	0	0	0	0	0	0	0	0	0	0	0	0	0	0	0	0
4:30 PM	0	0	2	0	0	2	33	281	2	1	0	317	0	0	31	0	0	31	2	344	18	2	0	366	716
4:45 PM	0	0	8	0	0	8	28	328	1	3	0	360	0	0	26	0	0	26	3	401	19	3	0	426	820
Hourly Total	0	0	10	0	0	10	61	609	3	4	0	677	0	0	57	0	0	57	5	745	37	5	0	792	1536
5:00 PM	0	0	3	0	1	3	32	337	1	1	0	371	0	0	23	0	0	23	4	372	26	0	0	402	799
5:15 PM	0	0	7	0	0	7	51	318	0	1	0	370	0	0	32	0	2	32	1	316	20	1	0	338	747
5:30 PM	0	0	9	0	0	9	40	338	1	0	0	379	0	0	39	0	0	39	4	440	12	3	0	459	886
5:45 PM	0	0	1	0	0	1	32	305	1	4	0	342	0	0	30	0	0	30	5	408	22	4	0	439	812
Hourly Total	0	0	20	0	1	20	155	1298	3	6	0	1462	0	0	124	0	2	124	14	1536	80	8	0	1638	3244
6:00 PM	0	0	4	0	0	4	47	354	1	1	0	403	0	0	35	0	0	35	0	349	22	2	0	373	815
6:15 PM	0	0	2	0	0	2	40	357	3	2	0	402	0	0	22	0	0	22	5	394	21	5	0	425	851
Grand Total	0	0	40	0	2	40	386	4551	15	18	0	4970	0	2	293	0	3	295	39	5716	219	25	0	5999	11304
Approach %	0.0	0.0	100.0	0.0	-	-	7.8	91.6	0.3	0.4	-	-	0.0	0.7	99.3	0.0	-	-	0.7	95.3	3.7	0.4	-	-	-
Total %	0.0	0.0	0.4	0.0	-	0.4	3.4	40.3	0.1	0.2	-	44.0	0.0	0.0	2.6	0.0	-	2.6	0.3	50.6	1.9	0.2	-	53.1	-
All Vehicles (no classification)	0	0	40	0	-	40	386	4551	15	18	-	4970	0	2	293	0	-	295	39	5716	219	25	-	5999	11304
% All Vehicles (no classification)	-	-	100.0	-	-	100.0	100.0	100.0	100.0	100.0	-	100.0	-	100.0	100.0	-	-	100.0	100.0	100.0	100.0	100.0	-	100.0	100.0
Pedestrians	-	-	-	-	2	-	-	-	-	-	0	-	-	-	-	-	3	-	-	-	-	-	0	-	-
% Pedestrians	-	-	-	-	100.0	-	-	-	-	-	-	-	-	-	-	-	100.0	-	-	-	-	-	-	-	-

CJ Hensch & Associates, Inc.
kh@cjhensch.com
5215 Sycamore Ave

Pasadena, Texas, United States 77503
281-487-5417

Count Name: Belt Line Road at Sam's Club Northwest Driveway (median opening)
Site Code: 3
Start Date: 06/23/2015

Turning Movement Peak Hour Data (7:45 AM)

Start Time	Driveway Southbound						Belt Line Road Westbound						Sam's Club NW Driveway Northbound						Belt Line Road Eastbound						
	Left	Thru	Right	U-Turn	Peds	App. Total	Left	Thru	Right	U-Turn	Peds	App. Total	Left	Thru	Right	U-Turn	Peds	App. Total	Left	Thru	Right	U-Turn	Peds	App. Total	Int. Total
7:45 AM	0	0	1	0	0	1	9	259	1	0	0	269	0	0	5	0	0	5	4	388	11	0	0	403	678
8:00 AM	0	0	1	0	1	1	9	259	0	1	0	269	0	0	6	0	0	6	3	322	12	0	0	337	613
8:15 AM	0	0	0	0	0	0	9	223	0	0	0	232	0	1	6	0	0	7	2	386	8	0	0	396	635
8:30 AM	0	0	0	0	0	0	13	263	2	0	0	278	0	1	7	0	0	8	3	396	3	2	0	404	690
Total	0	0	2	0	1	2	40	1004	3	1	0	1048	0	2	24	0	0	26	12	1492	34	2	0	1540	2616
Approach %	0.0	0.0	100.0	0.0	-	-	3.8	95.8	0.3	0.1	-	-	0.0	7.7	92.3	0.0	-	-	0.8	96.9	2.2	0.1	-	-	-
Total %	0.0	0.0	0.1	0.0	-	0.1	1.5	38.4	0.1	0.0	-	40.1	0.0	0.1	0.9	0.0	-	1.0	0.5	57.0	1.3	0.1	-	58.9	-
PHF	0.000	0.000	0.500	0.000	-	0.500	0.769	0.954	0.375	0.250	-	0.942	0.000	0.500	0.857	0.000	-	0.813	0.750	0.942	0.708	0.250	-	0.953	0.948
All Vehicles (no classification)	0	0	2	0	-	2	40	1004	3	1	-	1048	0	2	24	0	-	26	12	1492	34	2	-	1540	2616
% All Vehicles (no classification)	-	-	100.0	-	-	100.0	100.0	100.0	100.0	100.0	-	100.0	-	100.0	100.0	-	-	100.0	100.0	100.0	100.0	100.0	-	100.0	100.0
Pedestrians	-	-	-	-	1	-	-	-	-	-	0	-	-	-	-	-	0	-	-	-	-	-	0	-	-
% Pedestrians	-	-	-	-	100.0	-	-	-	-	-	-	-	-	-	-	-	-	-	-	-	-	-	-	-	-

CJ Hensch & Associates, Inc.
kh@cjhensch.com
5215 Sycamore Ave

Pasadena, Texas, United States 77503
281-487-5417

Count Name: Belt Line Road at Sam's Club Northwest Driveway (median opening)
Site Code: 3
Start Date: 06/23/2015

Turning Movement Peak Hour Data (5:30 PM)

Start Time	Driveway Southbound						Belt Line Road Westbound						Sam's Club NW Driveway Northbound						Belt Line Road Eastbound						
	Left	Thru	Right	U-Turn	Peds	App. Total	Left	Thru	Right	U-Turn	Peds	App. Total	Left	Thru	Right	U-Turn	Peds	App. Total	Left	Thru	Right	U-Turn	Peds	App. Total	Int. Total
5:30 PM	0	0	9	0	0	9	40	338	1	0	0	379	0	0	39	0	0	39	4	440	12	3	0	459	886
5:45 PM	0	0	1	0	0	1	32	305	1	4	0	342	0	0	30	0	0	30	5	408	22	4	0	439	812
6:00 PM	0	0	4	0	0	4	47	354	1	1	0	403	0	0	35	0	0	35	0	349	22	2	0	373	815
6:15 PM	0	0	2	0	0	2	40	357	3	2	0	402	0	0	22	0	0	22	5	394	21	5	0	425	851
Total	0	0	16	0	0	16	159	1354	6	7	0	1526	0	0	126	0	0	126	14	1591	77	14	0	1696	3364
Approach %	0.0	0.0	100.0	0.0	-	-	10.4	88.7	0.4	0.5	-	-	0.0	0.0	100.0	0.0	-	-	0.8	93.8	4.5	0.8	-	-	-
Total %	0.0	0.0	0.5	0.0	-	0.5	4.7	40.2	0.2	0.2	-	45.4	0.0	0.0	3.7	0.0	-	3.7	0.4	47.3	2.3	0.4	-	50.4	-
PHF	0.000	0.000	0.444	0.000	-	0.444	0.846	0.948	0.500	0.438	-	0.947	0.000	0.000	0.808	0.000	-	0.808	0.700	0.904	0.875	0.700	-	0.924	0.949
All Vehicles (no classification)	0	0	16	0	-	16	159	1354	6	7	-	1526	0	0	126	0	-	126	14	1591	77	14	-	1696	3364
% All Vehicles (no classification)	-	-	100.0	-	-	100.0	100.0	100.0	100.0	100.0	-	100.0	-	-	100.0	-	-	100.0	100.0	100.0	100.0	100.0	-	100.0	100.0
Pedestrians	-	-	-	-	0	-	-	-	-	-	0	-	-	-	-	-	0	-	-	-	-	-	0	-	-
% Pedestrians	-	-	-	-	-	-	-	-	-	-	-	-	-	-	-	-	-	-	-	-	-	-	-	-	-

CJ Hensch & Associates, Inc.
kh@cjhensch.com
5215 Sycamore Ave

Pasadena, Texas, United States 77503
281-487-5417

Count Name: Belt Line Road at Surveyor Boulevard
Site Code: 1
Start Date: 06/23/2015

Turning Movement Data

Start Time	Surveyer Boulevard Southbound						Belt Line Road Westbound						Surveyer Boulevard Northbound						Belt Line Road Eastbound						
	Left	Thru	Right	U-Turn	Peds	App. Total	Left	Thru	Right	U-Turn	Peds	App. Total	Left	Thru	Right	U-Turn	Peds	App. Total	Left	Thru	Right	U-Turn	Peds	App. Total	Int. Total
7:00 AM	8	4	18	0	0	30	6	201	2	0	0	209	6	8	10	0	1	24	19	214	11	0	0	244	507
7:15 AM	11	18	26	0	0	55	12	221	6	1	0	240	3	13	13	0	0	29	28	300	6	0	0	334	658
7:30 AM	3	14	26	0	1	43	20	258	7	0	0	285	5	13	8	0	0	26	27	320	6	0	0	353	707
7:45 AM	8	12	27	0	2	47	24	235	14	0	0	273	11	15	17	0	0	43	35	346	11	0	1	392	755
Hourly Total	30	48	97	0	3	175	62	915	29	1	0	1007	25	49	48	0	1	122	109	1180	34	0	1	1323	2627
8:00 AM	6	18	33	0	0	57	21	221	8	0	0	250	3	11	9	0	0	23	36	302	12	0	0	350	680
8:15 AM	10	22	32	0	0	64	9	227	17	0	0	253	5	11	12	0	0	28	42	340	13	0	0	395	740
8:30 AM	3	16	27	0	0	46	16	207	10	0	0	233	11	10	12	0	0	33	39	310	10	0	1	359	671
8:45 AM	10	19	28	0	0	57	12	224	11	0	0	247	4	15	6	0	0	25	28	320	19	0	0	367	696
Hourly Total	29	75	120	0	0	224	58	879	46	0	0	983	23	47	39	0	0	109	145	1272	54	0	1	1471	2787
9:00 AM	0	0	0	0	0	0	0	0	0	0	0	0	0	0	0	0	0	0	0	0	0	0	0	0	0
*** BREAK ***	-	-	-	-	-	-	-	-	-	-	-	-	-	-	-	-	-	-	-	-	-	-	-	-	-
Hourly Total	0	0	0	0	0	0	0	0	0	0	0	0	0	0	0	0	0	0	0	0	0	0	0	0	0
4:30 PM	18	27	44	0	1	89	14	300	10	1	0	325	17	17	14	0	0	48	25	332	4	0	0	361	823
4:45 PM	17	18	34	1	0	70	14	320	10	3	0	347	8	26	20	0	0	54	27	369	14	0	0	410	881
Hourly Total	35	45	78	1	1	159	28	620	20	4	0	672	25	43	34	0	0	102	52	701	18	0	0	771	1704
5:00 PM	33	27	40	0	0	100	8	300	8	1	0	317	10	31	21	0	2	62	25	326	5	0	1	356	835
5:15 PM	13	34	39	0	0	86	14	342	9	1	0	366	21	32	19	0	1	72	33	345	8	1	0	387	911
5:30 PM	16	37	40	0	0	93	15	339	15	0	0	369	19	22	23	0	0	64	20	350	17	0	0	387	913
5:45 PM	17	32	39	0	0	88	15	313	11	1	0	340	18	25	28	0	1	71	28	390	13	0	0	431	930
Hourly Total	79	130	158	0	0	367	52	1294	43	3	0	1392	68	110	91	0	4	269	106	1411	43	1	1	1561	3589
6:00 PM	18	24	34	0	0	76	9	333	8	0	0	350	18	43	26	0	0	87	27	351	12	0	0	390	903
6:15 PM	13	19	28	0	0	60	5	330	13	1	1	349	9	15	18	0	0	42	24	368	6	0	0	398	849
6:30 PM	0	0	0	0	0	0	0	2	0	0	0	2	0	0	0	0	0	0	0	0	0	0	0	0	2
Grand Total	204	341	515	1	4	1061	214	4373	159	9	1	4755	168	307	256	0	5	731	463	5283	167	1	3	5914	12461
Approach %	19.2	32.1	48.5	0.1	-	-	4.5	92.0	3.3	0.2	-	-	23.0	42.0	35.0	0.0	-	-	7.8	89.3	2.8	0.0	-	-	-
Total %	1.6	2.7	4.1	0.0	-	8.5	1.7	35.1	1.3	0.1	-	38.2	1.3	2.5	2.1	0.0	-	5.9	3.7	42.4	1.3	0.0	-	47.5	-
All Vehicles (no classification)	204	341	515	1	-	1061	214	4373	159	9	-	4755	168	307	256	0	-	731	463	5283	167	1	-	5914	12461
% All Vehicles (no classification)	100.0	100.0	100.0	100.0	-	100.0	100.0	100.0	100.0	100.0	-	100.0	100.0	100.0	100.0	-	-	100.0	100.0	100.0	100.0	100.0	-	100.0	100.0
Pedestrians	-	-	-	-	4	-	-	-	-	-	1	-	-	-	-	-	5	-	-	-	-	-	3	-	-
% Pedestrians	-	-	-	-	100.0	-	-	-	-	-	100.0	-	-	-	-	-	100.0	-	-	-	-	-	100.0	-	-

CJ Hensch & Associates, Inc.
kh@cjhensch.com
5215 Sycamore Ave

Pasadena, Texas, United States 77503
281-487-5417

Count Name: Belt Line Road at Surveyor Boulevard
Site Code: 1
Start Date: 06/23/2015

Turning Movement Peak Hour Data (7:30 AM)

Start Time	Surveyer Boulevard Southbound						Belt Line Road Westbound						Surveyer Boulevard Northbound						Belt Line Road Eastbound						
	Left	Thru	Right	U-Turn	Peds	App. Total	Left	Thru	Right	U-Turn	Peds	App. Total	Left	Thru	Right	U-Turn	Peds	App. Total	Left	Thru	Right	U-Turn	Peds	App. Total	Int. Total
7:30 AM	3	14	26	0	1	43	20	258	7	0	0	285	5	13	8	0	0	26	27	320	6	0	0	353	707
7:45 AM	8	12	27	0	2	47	24	235	14	0	0	273	11	15	17	0	0	43	35	346	11	0	1	392	755
8:00 AM	6	18	33	0	0	57	21	221	8	0	0	250	3	11	9	0	0	23	36	302	12	0	0	350	680
8:15 AM	10	22	32	0	0	64	9	227	17	0	0	253	5	11	12	0	0	28	42	340	13	0	0	395	740
Total	27	66	118	0	3	211	74	941	46	0	0	1061	24	50	46	0	0	120	140	1308	42	0	1	1490	2882
Approach %	12.8	31.3	55.9	0.0	-	-	7.0	88.7	4.3	0.0	-	-	20.0	41.7	38.3	0.0	-	-	9.4	87.8	2.8	0.0	-	-	-
Total %	0.9	2.3	4.1	0.0	-	7.3	2.6	32.7	1.6	0.0	-	36.8	0.8	1.7	1.6	0.0	-	4.2	4.9	45.4	1.5	0.0	-	51.7	-
PHF	0.675	0.750	0.894	0.000	-	0.824	0.771	0.912	0.676	0.000	-	0.931	0.545	0.833	0.676	0.000	-	0.698	0.833	0.945	0.808	0.000	-	0.943	0.954
All Vehicles (no classification)	27	66	118	0	-	211	74	941	46	0	-	1061	24	50	46	0	-	120	140	1308	42	0	-	1490	2882
% All Vehicles (no classification)	100.0	100.0	100.0	-	-	100.0	100.0	100.0	100.0	-	-	100.0	100.0	100.0	100.0	-	-	100.0	100.0	100.0	100.0	-	-	100.0	100.0
Pedestrians	-	-	-	-	3	-	-	-	-	-	0	-	-	-	-	-	0	-	-	-	-	-	1	-	-
% Pedestrians	-	-	-	-	100.0	-	-	-	-	-	-	-	-	-	-	-	-	-	-	-	-	-	100.0	-	-

CJ Hensch & Associates, Inc.
kh@cjhensch.com
5215 Sycamore Ave

Pasadena, Texas, United States 77503
281-487-5417

Count Name: Belt Line Road at Surveyor Boulevard
Site Code: 1
Start Date: 06/23/2015

Turning Movement Peak Hour Data (5:15 PM)

Start Time	Surveyer Boulevard Southbound						Belt Line Road Westbound						Surveyer Boulevard Northbound						Belt Line Road Eastbound						
	Left	Thru	Right	U-Turn	Peds	App. Total	Left	Thru	Right	U-Turn	Peds	App. Total	Left	Thru	Right	U-Turn	Peds	App. Total	Left	Thru	Right	U-Turn	Peds	App. Total	Int. Total
5:15 PM	13	34	39	0	0	86	14	342	9	1	0	366	21	32	19	0	1	72	33	345	8	1	0	387	911
5:30 PM	16	37	40	0	0	93	15	339	15	0	0	369	19	22	23	0	0	64	20	350	17	0	0	387	913
5:45 PM	17	32	39	0	0	88	15	313	11	1	0	340	18	25	28	0	1	71	28	390	13	0	0	431	930
6:00 PM	18	24	34	0	0	76	9	333	8	0	0	350	18	43	26	0	0	87	27	351	12	0	0	390	903
Total	64	127	152	0	0	343	53	1327	43	2	0	1425	76	122	96	0	2	294	108	1436	50	1	0	1595	3657
Approach %	18.7	37.0	44.3	0.0	-	-	3.7	93.1	3.0	0.1	-	-	25.9	41.5	32.7	0.0	-	-	6.8	90.0	3.1	0.1	-	-	-
Total %	1.8	3.5	4.2	0.0	-	9.4	1.4	36.3	1.2	0.1	-	39.0	2.1	3.3	2.6	0.0	-	8.0	3.0	39.3	1.4	0.0	-	43.6	-
PHF	0.889	0.858	0.950	0.000	-	0.922	0.883	0.970	0.717	0.500	-	0.965	0.905	0.709	0.857	0.000	-	0.845	0.818	0.921	0.735	0.250	-	0.925	0.983
All Vehicles (no classification)	64	127	152	0	-	343	53	1327	43	2	-	1425	76	122	96	0	-	294	108	1436	50	1	-	1595	3657
% All Vehicles (no classification)	100.0	100.0	100.0	-	-	100.0	100.0	100.0	100.0	100.0	-	100.0	100.0	100.0	100.0	-	-	100.0	100.0	100.0	100.0	100.0	-	100.0	100.0
Pedestrians	-	-	-	-	0	-	-	-	-	-	0	-	-	-	-	-	2	-	-	-	-	-	0	-	-
% Pedestrians	-	-	-	-	-	-	-	-	-	-	-	-	-	-	-	-	100.0	-	-	-	-	-	-	-	-

CJ Hensch & Associates, Inc.
kh@cjhensch.com
5215 Sycamore Ave

Pasadena, Texas, United States 77503
281-487-5417

Count Name: Beltway Drive at Surveyor Boulevard
Site Code: 11
Start Date: 06/23/2015

Turning Movement Data

Start Time	Surveyer Boulevard Southbound						Beltway Drive Westbound						Surveyer Boulevard Northbound						Beltway Drive Eastbound						
	Left	Thru	Right	U-Turn	Peds	App. Total	Left	Thru	Right	U-Turn	Peds	App. Total	Left	Thru	Right	U-Turn	Peds	App. Total	Left	Thru	Right	U-Turn	Peds	App. Total	Int. Total
7:00 AM	14	10	0	0	1	24	2	0	3	0	2	5	0	11	5	0	0	16	0	3	1	0	0	4	49
7:15 AM	19	9	0	0	0	28	3	0	7	0	0	10	0	12	8	0	0	20	0	2	0	0	0	2	60
7:30 AM	15	22	0	0	0	37	4	0	10	0	0	14	0	16	11	0	0	27	3	2	2	0	0	7	85
7:45 AM	26	28	1	0	0	55	6	1	9	0	1	16	0	17	12	0	0	29	2	6	0	0	0	8	108
Hourly Total	74	69	1	0	1	144	15	1	29	0	3	45	0	56	36	0	0	92	5	13	3	0	0	21	302
8:00 AM	15	21	1	0	0	37	3	0	12	0	0	15	0	16	15	0	0	31	2	2	0	0	0	4	87
8:15 AM	18	13	1	0	0	32	4	3	8	0	1	15	0	16	6	0	0	22	4	4	0	0	0	8	77
8:30 AM	21	15	0	0	0	36	8	0	10	0	0	18	0	21	13	0	0	34	1	2	1	0	0	4	92
8:45 AM	18	19	0	0	0	37	4	1	10	0	1	15	0	8	8	0	0	16	0	0	1	0	0	1	69
Hourly Total	72	68	2	0	0	142	19	4	40	0	2	63	0	61	42	0	0	103	7	8	2	0	0	17	325
9:00 AM	0	0	0	0	0	0	0	0	0	0	0	0	0	0	0	0	0	0	0	0	0	0	0	0	0
*** BREAK ***	-	-	-	-	-	-	-	-	-	-	-	-	-	-	-	-	-	-	-	-	-	-	-	-	-
Hourly Total	0	0	0	0	0	0	0	0	0	0	0	0	0	0	0	0	0	0	0	0	0	0	0	0	0
4:30 PM	9	17	1	0	0	27	11	2	38	0	0	51	2	27	13	1	0	43	1	0	1	0	0	2	123
4:45 PM	25	18	3	0	1	46	8	0	23	1	1	32	1	18	10	0	1	29	0	0	0	0	0	0	107
Hourly Total	34	35	4	0	1	73	19	2	61	1	1	83	3	45	23	1	1	72	1	0	1	0	0	2	230
5:00 PM	21	19	2	0	1	42	10	1	39	0	1	50	0	36	7	0	0	43	2	1	0	0	0	3	138
5:15 PM	19	28	1	0	0	48	11	1	50	0	1	62	0	17	15	0	0	32	2	2	0	0	0	4	146
5:30 PM	18	33	6	0	0	57	10	8	47	0	2	65	1	37	23	0	0	61	2	0	0	0	0	2	185
5:45 PM	27	22	1	0	0	50	12	2	49	0	0	63	1	26	17	0	0	44	3	1	2	0	0	6	163
Hourly Total	85	102	10	0	1	197	43	12	185	0	4	240	2	116	62	0	0	180	9	4	2	0	0	15	632
6:00 PM	29	26	3	0	0	58	13	3	30	0	1	46	0	33	20	0	0	53	1	4	1	0	0	6	163
6:15 PM	12	27	1	0	0	40	9	0	26	0	2	35	1	20	12	0	0	33	0	0	0	0	0	0	108
6:30 PM	0	0	0	0	0	0	0	0	2	0	0	2	0	0	0	0	0	0	0	0	0	0	0	0	2
Grand Total	306	327	21	0	3	654	118	22	373	1	13	514	6	331	195	1	1	533	23	29	9	0	0	61	1762
Approach %	46.8	50.0	3.2	0.0	-	-	23.0	4.3	72.6	0.2	-	-	1.1	62.1	36.6	0.2	-	-	37.7	47.5	14.8	0.0	-	-	-
Total %	17.4	18.6	1.2	0.0	-	37.1	6.7	1.2	21.2	0.1	-	29.2	0.3	18.8	11.1	0.1	-	30.2	1.3	1.6	0.5	0.0	-	3.5	-
All Vehicles (no classification)	306	327	21	0	-	654	118	22	373	1	-	514	6	331	195	1	-	533	23	29	9	0	-	61	1762
% All Vehicles (no classification)	100.0	100.0	100.0	-	-	100.0	100.0	100.0	100.0	100.0	-	100.0	100.0	100.0	100.0	100.0	-	100.0	100.0	100.0	100.0	-	-	100.0	100.0
Pedestrians	-	-	-	-	3	-	-	-	-	-	13	-	-	-	-	-	1	-	-	-	-	-	0	-	-
% Pedestrians	-	-	-	-	100.0	-	-	-	-	-	100.0	-	-	-	-	-	100.0	-	-	-	-	-	-	-	-

CJ Hensch & Associates, Inc.
kh@cjhensch.com
5215 Sycamore Ave

Pasadena, Texas, United States 77503
281-487-5417

Count Name: Beltway Drive at Surveyor Boulevard
Site Code: 11
Start Date: 06/23/2015

Turning Movement Peak Hour Data (7:45 AM)

Start Time	Surveyer Boulevard Southbound						Beltway Drive Westbound						Surveyer Boulevard Northbound						Beltway Drive Eastbound						
	Left	Thru	Right	U-Turn	Peds	App. Total	Left	Thru	Right	U-Turn	Peds	App. Total	Left	Thru	Right	U-Turn	Peds	App. Total	Left	Thru	Right	U-Turn	Peds	App. Total	Int. Total
7:45 AM	26	28	1	0	0	55	6	1	9	0	1	16	0	17	12	0	0	29	2	6	0	0	0	8	108
8:00 AM	15	21	1	0	0	37	3	0	12	0	0	15	0	16	15	0	0	31	2	2	0	0	0	4	87
8:15 AM	18	13	1	0	0	32	4	3	8	0	1	15	0	16	6	0	0	22	4	4	0	0	0	8	77
8:30 AM	21	15	0	0	0	36	8	0	10	0	0	18	0	21	13	0	0	34	1	2	1	0	0	4	92
Total	80	77	3	0	0	160	21	4	39	0	2	64	0	70	46	0	0	116	9	14	1	0	0	24	364
Approach %	50.0	48.1	1.9	0.0	-	-	32.8	6.3	60.9	0.0	-	-	0.0	60.3	39.7	0.0	-	-	37.5	58.3	4.2	0.0	-	-	-
Total %	22.0	21.2	0.8	0.0	-	44.0	5.8	1.1	10.7	0.0	-	17.6	0.0	19.2	12.6	0.0	-	31.9	2.5	3.8	0.3	0.0	-	6.6	-
PHF	0.769	0.688	0.750	0.000	-	0.727	0.656	0.333	0.813	0.000	-	0.889	0.000	0.833	0.767	0.000	-	0.853	0.563	0.583	0.250	0.000	-	0.750	0.843
All Vehicles (no classification)	80	77	3	0	-	160	21	4	39	0	-	64	0	70	46	0	-	116	9	14	1	0	-	24	364
% All Vehicles (no classification)	100.0	100.0	100.0	-	-	100.0	100.0	100.0	100.0	-	-	100.0	-	100.0	100.0	-	-	100.0	100.0	100.0	100.0	-	-	100.0	100.0
Pedestrians	-	-	-	-	0	-	-	-	-	-	2	-	-	-	-	-	0	-	-	-	-	-	0	-	-
% Pedestrians	-	-	-	-	-	-	-	-	-	-	100.0	-	-	-	-	-	-	-	-	-	-	-	-	-	-

CJ Hensch & Associates, Inc.
kh@cjhensch.com
5215 Sycamore Ave

Pasadena, Texas, United States 77503
281-487-5417

Count Name: Beltway Drive at Surveyor Boulevard
Site Code: 11
Start Date: 06/23/2015

Turning Movement Peak Hour Data (5:15 PM)

Start Time	Surveyer Boulevard Southbound						Beltway Drive Westbound						Surveyer Boulevard Northbound						Beltway Drive Eastbound						
	Left	Thru	Right	U-Turn	Peds	App. Total	Left	Thru	Right	U-Turn	Peds	App. Total	Left	Thru	Right	U-Turn	Peds	App. Total	Left	Thru	Right	U-Turn	Peds	App. Total	Int. Total
5:15 PM	19	28	1	0	0	48	11	1	50	0	1	62	0	17	15	0	0	32	2	2	0	0	0	4	146
5:30 PM	18	33	6	0	0	57	10	8	47	0	2	65	1	37	23	0	0	61	2	0	0	0	0	2	185
5:45 PM	27	22	1	0	0	50	12	2	49	0	0	63	1	26	17	0	0	44	3	1	2	0	0	6	163
6:00 PM	29	26	3	0	0	58	13	3	30	0	1	46	0	33	20	0	0	53	1	4	1	0	0	6	163
Total	93	109	11	0	0	213	46	14	176	0	4	236	2	113	75	0	0	190	8	7	3	0	0	18	657
Approach %	43.7	51.2	5.2	0.0	-	-	19.5	5.9	74.6	0.0	-	-	1.1	59.5	39.5	0.0	-	-	44.4	38.9	16.7	0.0	-	-	-
Total %	14.2	16.6	1.7	0.0	-	32.4	7.0	2.1	26.8	0.0	-	35.9	0.3	17.2	11.4	0.0	-	28.9	1.2	1.1	0.5	0.0	-	2.7	-
PHF	0.802	0.826	0.458	0.000	-	0.918	0.885	0.438	0.880	0.000	-	0.908	0.500	0.764	0.815	0.000	-	0.779	0.667	0.438	0.375	0.000	-	0.750	0.888
All Vehicles (no classification)	93	109	11	0	-	213	46	14	176	0	-	236	2	113	75	0	-	190	8	7	3	0	-	18	657
% All Vehicles (no classification)	100.0	100.0	100.0	-	-	100.0	100.0	100.0	100.0	-	-	100.0	100.0	100.0	100.0	-	-	100.0	100.0	100.0	100.0	-	-	100.0	100.0
Pedestrians	-	-	-	-	0	-	-	-	-	-	4	-	-	-	-	-	0	-	-	-	-	-	0	-	-
% Pedestrians	-	-	-	-	-	-	-	-	-	-	100.0	-	-	-	-	-	-	-	-	-	-	-	-	-	-

CJ Hensch & Associates, Inc.
kh@cjhensch.com
5215 Sycamore Ave

Pasadena, Texas, United States 77503
281-487-5417

Count Name: Midway Road at Beltway Drive
Site Code: 8
Start Date: 06/23/2015

Turning Movement Data

Start Time	Midway Road Southbound						Beltway Drive Westbound						Midway Road Northbound						Beltway Drive Eastbound						
	Left	Thru	Right	U-Turn	Peds	App. Total	Left	Thru	Right	U-Turn	Peds	App. Total	Left	Thru	Right	U-Turn	Peds	App. Total	Left	Thru	Right	U-Turn	Peds	App. Total	Int. Total
7:00 AM	4	350	2	1	1	357	9	1	1	0	0	11	12	161	7	0	0	180	3	5	16	0	0	24	572
7:15 AM	7	523	4	0	0	534	10	1	14	0	0	25	10	220	7	0	0	237	6	3	10	0	0	19	815
7:30 AM	7	546	10	0	0	563	5	2	14	0	0	21	10	238	5	0	0	253	10	7	24	0	1	41	878
7:45 AM	13	544	12	0	0	569	11	2	9	0	0	22	13	225	9	0	0	247	8	13	26	0	1	47	885
Hourly Total	31	1963	28	1	1	2023	35	6	38	0	0	79	45	844	28	0	0	917	27	28	76	0	2	131	3150
8:00 AM	14	521	6	0	0	541	7	4	10	0	0	21	9	225	8	0	0	242	8	4	23	0	0	35	839
8:15 AM	10	500	5	0	0	515	11	2	6	0	0	19	8	208	17	0	0	233	15	5	13	0	0	33	800
8:30 AM	7	523	12	0	0	542	8	0	8	0	0	16	8	225	16	0	1	249	11	5	20	0	0	36	843
8:45 AM	13	536	3	0	0	552	2	2	6	0	0	10	10	241	7	0	0	258	8	4	14	0	0	26	846
Hourly Total	44	2080	26	0	0	2150	28	8	30	0	0	66	35	899	48	0	1	982	42	18	70	0	0	130	3328
9:00 AM	0	0	0	0	0	0	0	0	0	0	0	0	0	0	0	0	0	0	0	0	0	0	0	0	0
*** BREAK ***	-	-	-	-	-	-	-	-	-	-	-	-	-	-	-	-	-	-	-	-	-	-	-	-	-
Hourly Total	0	0	0	0	0	0	0	0	0	0	0	0	0	0	0	0	0	0	0	0	0	0	0	0	0
4:30 PM	13	384	15	0	0	412	9	6	10	0	0	25	23	496	15	0	0	534	10	3	19	0	1	32	1003
4:45 PM	10	424	8	0	0	442	7	7	11	0	0	25	18	453	18	1	0	490	16	6	21	0	0	43	1000
Hourly Total	23	808	23	0	0	854	16	13	21	0	0	50	41	949	33	1	0	1024	26	9	40	0	1	75	2003
5:00 PM	7	425	5	1	0	438	14	18	17	0	0	49	18	522	20	0	0	560	7	7	15	0	1	29	1076
5:15 PM	8	404	13	0	0	425	11	6	11	0	0	28	19	512	20	1	0	552	4	7	22	0	0	33	1038
5:30 PM	15	381	22	1	0	419	18	15	15	0	0	48	31	501	21	0	0	553	10	12	13	0	0	35	1055
5:45 PM	16	409	20	1	0	446	18	7	15	0	0	40	25	490	31	0	0	546	11	8	23	0	0	42	1074
Hourly Total	46	1619	60	3	0	1728	61	46	58	0	0	165	93	2025	92	1	0	2211	32	34	73	0	1	139	4243
6:00 PM	12	366	24	1	0	403	24	9	16	0	0	49	33	458	19	0	0	510	15	9	18	0	0	42	1004
6:15 PM	12	380	11	1	0	404	27	5	15	0	0	47	25	452	9	0	0	486	10	5	21	0	0	36	973
Grand Total	168	7216	172	6	1	7562	191	87	178	0	0	456	272	5627	229	2	1	6130	152	103	298	0	4	553	14701
Approach %	2.2	95.4	2.3	0.1	-	-	41.9	19.1	39.0	0.0	-	-	4.4	91.8	3.7	0.0	-	-	27.5	18.6	53.9	0.0	-	-	-
Total %	1.1	49.1	1.2	0.0	-	51.4	1.3	0.6	1.2	0.0	-	3.1	1.9	38.3	1.6	0.0	-	41.7	1.0	0.7	2.0	0.0	-	3.8	-
All Vehicles (no classification)	168	7216	172	6	-	7562	191	87	178	0	-	456	272	5627	229	2	-	6130	152	103	298	0	-	553	14701
% All Vehicles (no classification)	100.0	100.0	100.0	100.0	-	100.0	100.0	100.0	100.0	-	-	100.0	100.0	100.0	100.0	100.0	-	100.0	100.0	100.0	100.0	-	-	100.0	100.0
Pedestrians	-	-	-	-	1	-	-	-	-	-	0	-	-	-	-	-	1	-	-	-	-	-	4	-	-
% Pedestrians	-	-	-	-	100.0	-	-	-	-	-	-	-	-	-	-	-	100.0	-	-	-	-	-	100.0	-	-

CJ Hensch & Associates, Inc.
kh@cjhensch.com
5215 Sycamore Ave

Pasadena, Texas, United States 77503
281-487-5417

Count Name: Midway Road at Beltway Drive
Site Code: 8
Start Date: 06/23/2015

Turning Movement Peak Hour Data (7:15 AM)

Start Time	Midway Road Southbound						Beltway Drive Westbound						Midway Road Northbound						Beltway Drive Eastbound						
	Left	Thru	Right	U-Turn	Peds	App. Total	Left	Thru	Right	U-Turn	Peds	App. Total	Left	Thru	Right	U-Turn	Peds	App. Total	Left	Thru	Right	U-Turn	Peds	App. Total	Int. Total
7:15 AM	7	523	4	0	0	534	10	1	14	0	0	25	10	220	7	0	0	237	6	3	10	0	0	19	815
7:30 AM	7	546	10	0	0	563	5	2	14	0	0	21	10	238	5	0	0	253	10	7	24	0	1	41	878
7:45 AM	13	544	12	0	0	569	11	2	9	0	0	22	13	225	9	0	0	247	8	13	26	0	1	47	885
8:00 AM	14	521	6	0	0	541	7	4	10	0	0	21	9	225	8	0	0	242	8	4	23	0	0	35	839
Total	41	2134	32	0	0	2207	33	9	47	0	0	89	42	908	29	0	0	979	32	27	83	0	2	142	3417
Approach %	1.9	96.7	1.4	0.0	-	-	37.1	10.1	52.8	0.0	-	-	4.3	92.7	3.0	0.0	-	-	22.5	19.0	58.5	0.0	-	-	-
Total %	1.2	62.5	0.9	0.0	-	64.6	1.0	0.3	1.4	0.0	-	2.6	1.2	26.6	0.8	0.0	-	28.7	0.9	0.8	2.4	0.0	-	4.2	-
PHF	0.732	0.977	0.667	0.000	-	0.970	0.750	0.563	0.839	0.000	-	0.890	0.808	0.954	0.806	0.000	-	0.967	0.800	0.519	0.798	0.000	-	0.755	0.965
All Vehicles (no classification)	41	2134	32	0	-	2207	33	9	47	0	-	89	42	908	29	0	-	979	32	27	83	0	-	142	3417
% All Vehicles (no classification)	100.0	100.0	100.0	-	-	100.0	100.0	100.0	100.0	-	-	100.0	100.0	100.0	100.0	-	-	100.0	100.0	100.0	100.0	-	-	100.0	100.0
Pedestrians	-	-	-	-	0	-	-	-	-	-	0	-	-	-	-	-	0	-	-	-	-	-	2	-	-
% Pedestrians	-	-	-	-	-	-	-	-	-	-	-	-	-	-	-	-	-	-	-	-	-	-	100.0	-	-

CJ Hensch & Associates, Inc.
kh@cjhensch.com
5215 Sycamore Ave

Pasadena, Texas, United States 77503
281-487-5417

Count Name: Midway Road at Beltway Drive
Site Code: 8
Start Date: 06/23/2015

Turning Movement Peak Hour Data (5:00 PM)

Start Time	Midway Road Southbound						Beltway Drive Westbound						Midway Road Northbound						Beltway Drive Eastbound						
	Left	Thru	Right	U-Turn	Peds	App. Total	Left	Thru	Right	U-Turn	Peds	App. Total	Left	Thru	Right	U-Turn	Peds	App. Total	Left	Thru	Right	U-Turn	Peds	App. Total	Int. Total
5:00 PM	7	425	5	1	0	438	14	18	17	0	0	49	18	522	20	0	0	560	7	7	15	0	1	29	1076
5:15 PM	8	404	13	0	0	425	11	6	11	0	0	28	19	512	20	1	0	552	4	7	22	0	0	33	1038
5:30 PM	15	381	22	1	0	419	18	15	15	0	0	48	31	501	21	0	0	553	10	12	13	0	0	35	1055
5:45 PM	16	409	20	1	0	446	18	7	15	0	0	40	25	490	31	0	0	546	11	8	23	0	0	42	1074
Total	46	1619	60	3	0	1728	61	46	58	0	0	165	93	2025	92	1	0	2211	32	34	73	0	1	139	4243
Approach %	2.7	93.7	3.5	0.2	-	-	37.0	27.9	35.2	0.0	-	-	4.2	91.6	4.2	0.0	-	-	23.0	24.5	52.5	0.0	-	-	-
Total %	1.1	38.2	1.4	0.1	-	40.7	1.4	1.1	1.4	0.0	-	3.9	2.2	47.7	2.2	0.0	-	52.1	0.8	0.8	1.7	0.0	-	3.3	-
PHF	0.719	0.952	0.682	0.750	-	0.969	0.847	0.639	0.853	0.000	-	0.842	0.750	0.970	0.742	0.250	-	0.987	0.727	0.708	0.793	0.000	-	0.827	0.986
All Vehicles (no classification)	46	1619	60	3	-	1728	61	46	58	0	-	165	93	2025	92	1	-	2211	32	34	73	0	-	139	4243
% All Vehicles (no classification)	100.0	100.0	100.0	100.0	-	100.0	100.0	100.0	100.0	-	-	100.0	100.0	100.0	100.0	100.0	-	100.0	100.0	100.0	100.0	-	-	100.0	100.0
Pedestrians	-	-	-	-	0	-	-	-	-	-	0	-	-	-	-	-	0	-	-	-	-	-	1	-	-
% Pedestrians	-	-	-	-	-	-	-	-	-	-	-	-	-	-	-	-	-	-	-	-	-	-	100.0	-	-

CJ Hensch & Associates, Inc.
kh@cjhensch.com
5215 Sycamore Ave

Pasadena, Texas, United States 77503
281-487-5417

Count Name: Midway Road at Beltwood Parkway
Site Code: 9
Start Date: 06/23/2015

Turning Movement Data

Start Time	Midway Road Southbound						Beltwood Parkway Westbound						Midway Road Northbound						Driveway Eastbound						Int. Total
	Left	Thru	Right	U-Turn	Peds	App. Total	Left	Thru	Right	U-Turn	Peds	App. Total	Left	Thru	Right	U-Turn	Peds	App. Total	Left	Thru	Right	U-Turn	Peds	App. Total	
7:00 AM	12	403	0	5	2	420	0	0	2	0	0	2	0	206	9	0	0	215	0	0	0	0	0	0	637
7:15 AM	13	467	0	2	0	482	1	0	3	1	0	5	0	236	6	0	0	242	0	0	1	0	0	1	730
7:30 AM	15	602	0	1	0	618	0	0	3	0	0	3	0	235	6	1	1	242	0	0	0	0	2	0	863
7:45 AM	24	545	0	4	0	573	2	0	2	0	0	4	0	237	10	0	0	247	0	0	0	0	0	0	824
Hourly Total	64	2017	0	12	2	2093	3	0	10	1	0	14	0	914	31	1	1	946	0	0	1	0	2	1	3054
8:00 AM	17	505	0	0	0	522	1	0	1	0	0	2	1	254	10	3	0	268	0	0	0	0	0	0	792
8:15 AM	17	564	0	8	0	589	1	0	3	0	0	4	1	240	8	0	0	249	0	0	1	0	0	1	843
8:30 AM	16	492	0	2	0	510	3	0	7	0	0	10	0	246	10	0	0	256	0	0	0	0	0	0	776
8:45 AM	20	521	0	1	0	542	0	0	3	0	0	3	1	239	6	3	0	249	0	1	2	0	0	3	797
Hourly Total	70	2082	0	11	0	2163	5	0	14	0	0	19	3	979	34	6	0	1022	0	1	3	0	0	4	3208
9:00 AM	0	0	0	0	0	0	0	0	0	0	0	0	0	0	0	0	0	0	0	0	0	0	0	0	0
*** BREAK ***	-	-	-	-	-	-	-	-	-	-	-	-	-	-	-	-	-	-	-	-	-	-	-	-	-
Hourly Total	0	0	0	0	0	0	0	0	0	0	0	0	0	0	0	0	0	0	0	0	0	0	0	0	0
4:30 PM	11	361	0	1	0	373	4	0	24	0	0	28	3	523	2	0	0	528	0	0	0	0	2	0	929
4:45 PM	7	385	0	1	0	393	2	0	18	0	0	20	5	464	6	1	0	476	0	0	0	0	0	0	889
Hourly Total	18	746	0	2	0	766	6	0	42	0	0	48	8	987	8	1	0	1004	0	0	0	0	2	0	1818
5:00 PM	6	397	2	0	0	405	4	0	35	0	0	39	5	716	11	4	0	736	0	0	0	0	1	0	1180
5:15 PM	7	433	0	3	0	443	3	0	20	0	0	23	3	582	3	0	0	588	1	0	0	0	2	1	1055
5:30 PM	4	413	1	1	0	419	3	0	20	0	0	23	5	580	8	0	0	593	0	0	2	0	1	2	1037
5:45 PM	6	441	5	2	0	454	1	0	25	1	0	27	0	474	6	0	0	480	0	0	2	0	1	2	963
Hourly Total	23	1684	8	6	0	1721	11	0	100	1	0	112	13	2352	28	4	0	2397	1	0	4	0	5	5	4235
6:00 PM	6	438	5	2	0	451	2	0	20	0	0	22	7	530	5	0	0	542	0	0	2	0	2	2	1017
6:15 PM	2	395	2	7	0	406	0	0	13	0	0	13	6	463	2	1	0	472	0	0	2	0	2	2	893
6:30 PM	0	0	0	0	0	0	0	0	0	0	0	0	0	0	0	0	0	0	0	0	0	0	0	0	0
Grand Total	183	7362	15	40	2	7600	27	0	199	2	0	228	37	6225	108	13	1	6383	1	1	12	0	13	14	14225
Approach %	2.4	96.9	0.2	0.5	-	-	11.8	0.0	87.3	0.9	-	-	0.6	97.5	1.7	0.2	-	-	7.1	7.1	85.7	0.0	-	-	-
Total %	1.3	51.8	0.1	0.3	-	53.4	0.2	0.0	1.4	0.0	-	1.6	0.3	43.8	0.8	0.1	-	44.9	0.0	0.0	0.1	0.0	-	0.1	-
All Vehicles (no classification)	183	7362	15	40	-	7600	27	0	199	2	-	228	37	6225	108	13	-	6383	1	1	12	0	-	14	14225
% All Vehicles (no classification)	100.0	100.0	100.0	100.0	-	100.0	100.0	-	100.0	100.0	-	100.0	100.0	100.0	100.0	100.0	-	100.0	100.0	100.0	100.0	-	-	100.0	100.0
Pedestrians	-	-	-	-	2	-	-	-	-	-	0	-	-	-	-	-	1	-	-	-	-	-	13	-	-
% Pedestrians	-	-	-	-	100.0	-	-	-	-	-	-	-	-	-	-	-	100.0	-	-	-	-	-	100.0	-	-

CJ Hensch & Associates, Inc.
kh@cjhensch.com
5215 Sycamore Ave

Pasadena, Texas, United States 77503
281-487-5417

Count Name: Midway Road at Beltwood Parkway
Site Code: 9
Start Date: 06/23/2015

Turning Movement Peak Hour Data (7:30 AM)

Start Time	Midway Road Southbound						Beltwood Parkway Westbound						Midway Road Northbound						Driveway Eastbound						Int. Total
	Left	Thru	Right	U-Turn	Peds	App. Total	Left	Thru	Right	U-Turn	Peds	App. Total	Left	Thru	Right	U-Turn	Peds	App. Total	Left	Thru	Right	U-Turn	Peds	App. Total	
7:30 AM	15	602	0	1	0	618	0	0	3	0	0	3	0	235	6	1	1	242	0	0	0	0	2	0	863
7:45 AM	24	545	0	4	0	573	2	0	2	0	0	4	0	237	10	0	0	247	0	0	0	0	0	0	824
8:00 AM	17	505	0	0	0	522	1	0	1	0	0	2	1	254	10	3	0	268	0	0	0	0	0	0	792
8:15 AM	17	564	0	8	0	589	1	0	3	0	0	4	1	240	8	0	0	249	0	0	1	0	0	1	843
Total	73	2216	0	13	0	2302	4	0	9	0	0	13	2	966	34	4	1	1006	0	0	1	0	2	1	3322
Approach %	3.2	96.3	0.0	0.6	-	-	30.8	0.0	69.2	0.0	-	-	0.2	96.0	3.4	0.4	-	-	0.0	0.0	100.0	0.0	-	-	-
Total %	2.2	66.7	0.0	0.4	-	69.3	0.1	0.0	0.3	0.0	-	0.4	0.1	29.1	1.0	0.1	-	30.3	0.0	0.0	0.0	0.0	-	0.0	-
PHF	0.760	0.920	0.000	0.406	-	0.931	0.500	0.000	0.750	0.000	-	0.813	0.500	0.951	0.850	0.333	-	0.938	0.000	0.000	0.250	0.000	-	0.250	0.962
All Vehicles (no classification)	73	2216	0	13	-	2302	4	0	9	0	-	13	2	966	34	4	-	1006	0	0	1	0	-	1	3322
% All Vehicles (no classification)	100.0	100.0	-	100.0	-	100.0	100.0	-	100.0	-	-	100.0	100.0	100.0	100.0	100.0	-	100.0	-	-	100.0	-	-	100.0	100.0
Pedestrians	-	-	-	-	0	-	-	-	-	-	0	-	-	-	-	-	1	-	-	-	-	-	2	-	-
% Pedestrians	-	-	-	-	-	-	-	-	-	-	-	-	-	-	-	-	100.0	-	-	-	-	-	100.0	-	-

CJ Hensch & Associates, Inc.

kh@cjhensch.com
5215 Sycamore Ave

Pasadena, Texas, United States 77503
281-487-5417

Count Name: Midway Road at Beltwood Parkway
Site Code: 9
Start Date: 06/23/2015
Page No: 5

Turning Movement Peak Hour Data (5:00 PM)

Start Time	Midway Road Southbound						Beltwood Parkway Westbound						Midway Road Northbound						Driveway Eastbound						
	Left	Thru	Right	U-Turn	Peds	App. Total	Left	Thru	Right	U-Turn	Peds	App. Total	Left	Thru	Right	U-Turn	Peds	App. Total	Left	Thru	Right	U-Turn	Peds	App. Total	Int. Total
5:00 PM	6	397	2	0	0	405	4	0	35	0	0	39	5	716	11	4	0	736	0	0	0	0	1	0	1180
5:15 PM	7	433	0	3	0	443	3	0	20	0	0	23	3	582	3	0	0	588	1	0	0	0	2	1	1055
5:30 PM	4	413	1	1	0	419	3	0	20	0	0	23	5	580	8	0	0	593	0	0	2	0	1	2	1037
5:45 PM	6	441	5	2	0	454	1	0	25	1	0	27	0	474	6	0	0	480	0	0	2	0	1	2	963
Total	23	1684	8	6	0	1721	11	0	100	1	0	112	13	2352	28	4	0	2397	1	0	4	0	5	5	4235
Approach %	1.3	97.9	0.5	0.3	-	-	9.8	0.0	89.3	0.9	-	-	0.5	98.1	1.2	0.2	-	-	20.0	0.0	80.0	0.0	-	-	-
Total %	0.5	39.8	0.2	0.1	-	40.6	0.3	0.0	2.4	0.0	-	2.6	0.3	55.5	0.7	0.1	-	56.6	0.0	0.0	0.1	0.0	-	0.1	-
PHF	0.821	0.955	0.400	0.500	-	0.948	0.688	0.000	0.714	0.250	-	0.718	0.650	0.821	0.636	0.250	-	0.814	0.250	0.000	0.500	0.000	-	0.625	0.897
All Vehicles (no classification)	23	1684	8	6	-	1721	11	0	100	1	-	112	13	2352	28	4	-	2397	1	0	4	0	-	5	4235
% All Vehicles (no classification)	100.0	100.0	100.0	100.0	-	100.0	100.0	-	100.0	100.0	-	100.0	100.0	100.0	100.0	100.0	-	100.0	100.0	-	100.0	-	-	100.0	100.0
Pedestrians	-	-	-	-	0	-	-	-	-	-	0	-	-	-	-	-	0	-	-	-	-	-	5	-	-
% Pedestrians	-	-	-	-	-	-	-	-	-	-	-	-	-	-	-	-	-	-	-	-	-	-	100.0	-	-

CJ Hensch & Associates, Inc.

kh@cjhensch.com
5215 Sycamore Ave

Pasadena, Texas, United States 77503
281-487-5417

Count Name: Midway Road at Lindbergh Drive
Site Code: 6
Start Date: 06/23/2015
Page No: 1

Turning Movement Data

Start Time	Midway Road Southbound						Lindbergh Drive Westbound						Midway Road Northbound						Lindbergh Drive Eastbound						
	Left	Thru	Right	U-Turn	Peds	App. Total	Left	Thru	Right	U-Turn	Peds	App. Total	Left	Thru	Right	U-Turn	Peds	App. Total	Left	Thru	Right	U-Turn	Peds	App. Total	Int. Total
7:00 AM	25	404	5	0	0	434	7	0	27	0	0	34	6	193	7	0	0	206	1	0	2	0	0	3	677
7:15 AM	36	473	10	0	0	519	5	2	33	0	0	40	9	215	7	2	0	233	0	0	4	0	0	4	796
7:30 AM	45	552	16	0	0	613	6	5	45	0	0	56	5	239	10	0	0	254	6	3	0	0	0	9	932
7:45 AM	60	533	15	1	0	609	2	7	42	0	0	51	9	291	12	0	0	312	4	4	2	0	0	10	982
Hourly Total	166	1962	46	1	0	2175	20	14	147	0	0	181	29	938	36	2	0	1005	11	7	8	0	0	26	3387
8:00 AM	46	593	7	0	0	646	5	3	34	0	0	42	13	246	13	0	0	272	5	0	3	0	0	8	968
8:15 AM	56	674	19	1	0	750	5	2	36	0	0	43	10	277	13	2	0	302	2	3	2	0	0	7	1102
8:30 AM	38	540	6	0	0	584	11	2	40	0	0	53	10	241	13	0	0	264	6	3	3	0	0	12	913
8:45 AM	43	540	8	0	0	591	9	3	22	0	1	34	8	206	20	1	0	235	7	4	7	0	0	18	878
Hourly Total	183	2347	40	1	0	2571	30	10	132	0	1	172	41	970	59	3	0	1073	20	10	15	0	0	45	3861
9:00 AM	0	0	0	0	0	0	0	0	1	0	0	1	0	0	0	0	0	0	0	0	0	0	0	0	1
*** BREAK ***	-	-	-	-	-	-	-	-	-	-	-	-	-	-	-	-	-	-	-	-	-	-	-	-	-
Hourly Total	0	0	0	0	0	0	0	0	1	0	0	1	0	0	0	0	0	0	0	0	0	0	0	0	1
4:30 PM	53	397	6	1	0	457	12	3	40	0	0	55	6	427	24	1	0	458	15	16	11	0	0	42	1012
4:45 PM	52	425	6	0	0	483	10	6	42	0	0	58	9	467	24	0	0	500	15	9	10	0	0	34	1075
Hourly Total	105	822	12	1	0	940	22	9	82	0	0	113	15	894	48	1	0	958	30	25	21	0	0	76	2087
5:00 PM	61	463	10	0	0	534	13	6	46	0	0	65	3	423	21	1	0	448	19	15	17	0	0	51	1098
5:15 PM	49	462	10	0	0	521	15	4	49	0	0	68	9	558	16	1	0	584	5	5	7	0	0	17	1190
5:30 PM	49	423	9	0	0	481	15	0	45	0	0	60	2	471	20	2	0	495	18	2	8	0	0	28	1064
5:45 PM	60	368	12	3	0	443	9	1	44	0	0	54	1	481	18	1	0	501	9	11	7	0	0	27	1025
Hourly Total	219	1716	41	3	0	1979	52	11	184	0	0	247	15	1933	75	5	0	2028	51	33	39	0	0	123	4377
6:00 PM	53	402	11	0	1	466	6	5	33	0	0	44	6	489	24	1	0	520	15	13	12	0	0	40	1070
6:15 PM	25	301	7	0	0	333	7	3	33	0	0	43	1	409	11	2	0	423	5	7	7	0	0	19	818
6:30 PM	0	0	0	0	0	0	0	0	0	0	0	0	0	0	0	0	0	0	0	0	0	0	0	0	0
Grand Total	751	7550	157	6	1	8464	137	52	612	0	1	801	107	5633	253	14	0	6007	132	95	102	0	0	329	15601
Approach %	8.9	89.2	1.9	0.1	-	-	17.1	6.5	76.4	0.0	-	-	1.8	93.8	4.2	0.2	-	-	40.1	28.9	31.0	0.0	-	-	-
Total %	4.8	48.4	1.0	0.0	-	54.3	0.9	0.3	3.9	0.0	-	5.1	0.7	36.1	1.6	0.1	-	38.5	0.8	0.6	0.7	0.0	-	2.1	-
All Vehicles (no classification)	751	7550	157	6	-	8464	137	52	612	0	-	801	107	5633	253	14	-	6007	132	95	102	0	-	329	15601
% All Vehicles (no classification)	100.0	100.0	100.0	100.0	-	100.0	100.0	100.0	100.0	-	-	100.0	100.0	100.0	100.0	100.0	-	100.0	100.0	100.0	100.0	-	-	100.0	100.0
Pedestrians	-	-	-	-	1	-	-	-	-	-	1	-	-	-	-	-	0	-	-	-	-	-	0	-	-
% Pedestrians	-	-	-	-	100.0	-	-	-	-	-	100.0	-	-	-	-	-	-	-	-	-	-	-	-	-	-

CJ Hensch & Associates, Inc.
kh@cjhensch.com
5215 Sycamore Ave

Pasadena, Texas, United States 77503
281-487-5417

Count Name: Midway Road at Lindbergh Drive
Site Code: 6
Start Date: 06/23/2015

Turning Movement Peak Hour Data (7:30 AM)

Start Time	Midway Road Southbound						Lindbergh Drive Westbound						Midway Road Northbound						Lindbergh Drive Eastbound						
	Left	Thru	Right	U-Turn	Peds	App. Total	Left	Thru	Right	U-Turn	Peds	App. Total	Left	Thru	Right	U-Turn	Peds	App. Total	Left	Thru	Right	U-Turn	Peds	App. Total	Int. Total
7:30 AM	45	552	16	0	0	613	6	5	45	0	0	56	5	239	10	0	0	254	6	3	0	0	0	9	932
7:45 AM	60	533	15	1	0	609	2	7	42	0	0	51	9	291	12	0	0	312	4	4	2	0	0	10	982
8:00 AM	46	593	7	0	0	646	5	3	34	0	0	42	13	246	13	0	0	272	5	0	3	0	0	8	968
8:15 AM	56	674	19	1	0	750	5	2	36	0	0	43	10	277	13	2	0	302	2	3	2	0	0	7	1102
Total	207	2352	57	2	0	2618	18	17	157	0	0	192	37	1053	48	2	0	1140	17	10	7	0	0	34	3984
Approach %	7.9	89.8	2.2	0.1	-	-	9.4	8.9	81.8	0.0	-	-	3.2	92.4	4.2	0.2	-	-	50.0	29.4	20.6	0.0	-	-	-
Total %	5.2	59.0	1.4	0.1	-	65.7	0.5	0.4	3.9	0.0	-	4.8	0.9	26.4	1.2	0.1	-	28.6	0.4	0.3	0.2	0.0	-	0.9	-
PHF	0.863	0.872	0.750	0.500	-	0.873	0.750	0.607	0.872	0.000	-	0.857	0.712	0.905	0.923	0.250	-	0.913	0.708	0.625	0.583	0.000	-	0.850	0.904
All Vehicles (no classification)	207	2352	57	2	-	2618	18	17	157	0	-	192	37	1053	48	2	-	1140	17	10	7	0	-	34	3984
% All Vehicles (no classification)	100.0	100.0	100.0	100.0	-	100.0	100.0	100.0	100.0	-	-	100.0	100.0	100.0	100.0	100.0	-	100.0	100.0	100.0	100.0	-	-	100.0	100.0
Pedestrians	-	-	-	-	0	-	-	-	-	-	0	-	-	-	-	-	0	-	-	-	-	-	0	-	-
% Pedestrians	-	-	-	-	-	-	-	-	-	-	-	-	-	-	-	-	-	-	-	-	-	-	-	-	-

CJ Hensch & Associates, Inc.
kh@cjhensch.com
5215 Sycamore Ave

Pasadena, Texas, United States 77503
281-487-5417

Count Name: Midway Road at Lindbergh Drive
Site Code: 6
Start Date: 06/23/2015

Turning Movement Peak Hour Data (4:45 PM)

Start Time	Midway Road Southbound						Lindbergh Drive Westbound						Midway Road Northbound						Lindbergh Drive Eastbound						
	Left	Thru	Right	U-Turn	Peds	App. Total	Left	Thru	Right	U-Turn	Peds	App. Total	Left	Thru	Right	U-Turn	Peds	App. Total	Left	Thru	Right	U-Turn	Peds	App. Total	Int. Total
4:45 PM	52	425	6	0	0	483	10	6	42	0	0	58	9	467	24	0	0	500	15	9	10	0	0	34	1075
5:00 PM	61	463	10	0	0	534	13	6	46	0	0	65	3	423	21	1	0	448	19	15	17	0	0	51	1098
5:15 PM	49	462	10	0	0	521	15	4	49	0	0	68	9	558	16	1	0	584	5	5	7	0	0	17	1190
5:30 PM	49	423	9	0	0	481	15	0	45	0	0	60	2	471	20	2	0	495	18	2	8	0	0	28	1064
Total	211	1773	35	0	0	2019	53	16	182	0	0	251	23	1919	81	4	0	2027	57	31	42	0	0	130	4427
Approach %	10.5	87.8	1.7	0.0	-	-	21.1	6.4	72.5	0.0	-	-	1.1	94.7	4.0	0.2	-	-	43.8	23.8	32.3	0.0	-	-	-
Total %	4.8	40.0	0.8	0.0	-	45.6	1.2	0.4	4.1	0.0	-	5.7	0.5	43.3	1.8	0.1	-	45.8	1.3	0.7	0.9	0.0	-	2.9	-
PHF	0.865	0.957	0.875	0.000	-	0.945	0.883	0.667	0.929	0.000	-	0.923	0.639	0.860	0.844	0.500	-	0.868	0.750	0.517	0.618	0.000	-	0.637	0.930
All Vehicles (no classification)	211	1773	35	0	-	2019	53	16	182	0	-	251	23	1919	81	4	-	2027	57	31	42	0	-	130	4427
% All Vehicles (no classification)	100.0	100.0	100.0	-	-	100.0	100.0	100.0	100.0	-	-	100.0	100.0	100.0	100.0	100.0	-	100.0	100.0	100.0	100.0	-	-	100.0	100.0
Pedestrians	-	-	-	-	0	-	-	-	-	-	0	-	-	-	-	-	0	-	-	-	-	-	0	-	-
% Pedestrians	-	-	-	-	-	-	-	-	-	-	-	-	-	-	-	-	-	-	-	-	-	-	-	-	-

CJ Hensch & Associates, Inc.
kh@cjhensch.com
5215 Sycamore Ave

Pasadena, Texas, United States 77503
281-487-5417

Count Name: Midway Road at median opening between Belt Line and Beltway
Site Code: 7
Start Date: 06/23/2015

Turning Movement Data

Start Time	Midway Road Southbound					Midway Road Northbound					Driveway Eastbound					
	Thru	Right	U-Turn	Peds	App. Total	Left	Thru	U-Turn	Peds	App. Total	Left	Right	U-Turn	Peds	App. Total	Int. Total
7:00 AM	410	0	10	0	420	5	190	0	0	195	1	2	0	0	3	618
7:15 AM	497	0	10	0	507	8	211	0	0	219	1	3	0	1	4	730
7:30 AM	610	4	7	0	621	5	256	0	0	261	3	6	0	0	9	891
7:45 AM	576	0	8	0	584	6	241	0	0	247	0	4	0	0	4	835
Hourly Total	2093	4	35	0	2132	24	898	0	0	922	5	15	0	1	20	3074
8:00 AM	512	2	5	0	519	5	237	0	0	242	1	11	0	1	12	773
8:15 AM	587	1	5	0	593	6	240	1	0	247	1	7	0	1	8	848
8:30 AM	509	3	9	0	521	7	237	0	0	244	1	4	0	0	5	770
8:45 AM	551	0	8	0	559	9	232	0	0	241	1	2	0	0	3	803
Hourly Total	2159	6	27	0	2192	27	946	1	0	974	4	24	0	2	28	3194
9:00 AM	0	0	0	0	0	0	0	0	0	0	0	0	0	0	0	0
*** BREAK ***	-	-	-	-	-	-	-	-	-	-	-	-	-	-	-	-
Hourly Total	0	0	0	0	0	0	0	0	0	0	0	0	0	0	0	0
4:30 PM	400	4	4	0	408	3	519	1	0	523	0	2	0	1	2	933
4:45 PM	380	0	2	0	382	4	474	0	0	478	1	2	0	1	3	863
Hourly Total	780	4	6	0	790	7	993	1	0	1001	1	4	0	2	5	1796
5:00 PM	397	5	5	0	407	3	482	0	0	485	1	2	0	1	3	895
5:15 PM	439	2	1	0	442	4	572	0	0	576	0	1	0	8	1	1019
5:30 PM	416	3	2	0	421	0	485	2	0	487	1	5	0	0	6	914
5:45 PM	471	0	6	0	477	7	485	0	0	492	0	3	0	0	3	972
Hourly Total	1723	10	14	0	1747	14	2024	2	0	2040	2	11	0	9	13	3800
6:00 PM	435	2	4	2	441	7	535	3	0	545	0	5	0	0	5	991
6:15 PM	382	3	7	0	392	4	431	4	0	439	0	3	0	0	3	834
6:30 PM	0	0	0	0	0	0	0	0	0	0	0	0	0	0	0	0
Grand Total	7572	29	93	2	7694	83	5827	11	0	5921	12	62	0	14	74	13689
Approach %	98.4	0.4	1.2	-	-	1.4	98.4	0.2	-	-	16.2	83.8	0.0	-	-	-
Total %	55.3	0.2	0.7	-	56.2	0.6	42.6	0.1	-	43.3	0.1	0.5	0.0	-	0.5	-
All Vehicles (no classification)	7572	29	93	-	7694	83	5827	11	-	5921	12	62	0	-	74	13689
% All Vehicles (no classification)	100.0	100.0	100.0	-	100.0	100.0	100.0	100.0	-	100.0	100.0	100.0	-	-	100.0	100.0
Pedestrians	-	-	-	2	-	-	-	-	0	-	-	-	-	14	-	-
% Pedestrians	-	-	-	100.0	-	-	-	-	-	-	-	-	-	100.0	-	-

CJ Hensch & Associates, Inc.
kh@cjhensch.com
5215 Sycamore Ave

Pasadena, Texas, United States 77503
281-487-5417

Count Name: Midway Road at median opening between Belt Line and Beltway
Site Code: 7
Start Date: 06/23/2015

Turning Movement Peak Hour Data (7:30 AM)

Start Time	Midway Road Southbound					Midway Road Northbound					Driveway Eastbound					
	Thru	Right	U-Turn	Peds	App. Total	Left	Thru	U-Turn	Peds	App. Total	Left	Right	U-Turn	Peds	App. Total	Int. Total
7:30 AM	610	4	7	0	621	5	256	0	0	261	3	6	0	0	9	891
7:45 AM	576	0	8	0	584	6	241	0	0	247	0	4	0	0	4	835
8:00 AM	512	2	5	0	519	5	237	0	0	242	1	11	0	1	12	773
8:15 AM	587	1	5	0	593	6	240	1	0	247	1	7	0	1	8	848
Total	2285	7	25	0	2317	22	974	1	0	997	5	28	0	2	33	3347
Approach %	98.6	0.3	1.1	-	-	2.2	97.7	0.1	-	-	15.2	84.8	0.0	-	-	-
Total %	68.3	0.2	0.7	-	69.2	0.7	29.1	0.0	-	29.8	0.1	0.8	0.0	-	1.0	-
PHF	0.936	0.438	0.781	-	0.933	0.917	0.951	0.250	-	0.955	0.417	0.636	0.000	-	0.688	0.939
All Vehicles (no classification)	2285	7	25	-	2317	22	974	1	-	997	5	28	0	-	33	3347
% All Vehicles (no classification)	100.0	100.0	100.0	-	100.0	100.0	100.0	100.0	-	100.0	100.0	100.0	-	-	100.0	100.0
Pedestrians	-	-	-	0	-	-	-	-	0	-	-	-	-	2	-	-
% Pedestrians	-	-	-	-	-	-	-	-	-	-	-	-	-	100.0	-	-

CJ Hensch & Associates, Inc.
kh@cjhensch.com
5215 Sycamore Ave

Pasadena, Texas, United States 77503
281-487-5417

Count Name: Midway Road at median opening between Belt Line and Beltway
Site Code: 7
Start Date: 06/23/2015
Page No: 5

Turning Movement Peak Hour Data (5:15 PM)

Start Time	Midway Road Southbound					Midway Road Northbound					Driveway Eastbound					
	Thru	Right	U-Turn	Peds	App. Total	Left	Thru	U-Turn	Peds	App. Total	Left	Right	U-Turn	Peds	App. Total	Int. Total
5:15 PM	439	2	1	0	442	4	572	0	0	576	0	1	0	8	1	1019
5:30 PM	416	3	2	0	421	0	485	2	0	487	1	5	0	0	6	914
5:45 PM	471	0	6	0	477	7	485	0	0	492	0	3	0	0	3	972
6:00 PM	435	2	4	2	441	7	535	3	0	545	0	5	0	0	5	991
Total	1761	7	13	2	1781	18	2077	5	0	2100	1	14	0	8	15	3896
Approach %	98.9	0.4	0.7	-	-	0.9	98.9	0.2	-	-	6.7	93.3	0.0	-	-	-
Total %	45.2	0.2	0.3	-	45.7	0.5	53.3	0.1	-	53.9	0.0	0.4	0.0	-	0.4	-
PHF	0.935	0.583	0.542	-	0.933	0.643	0.908	0.417	-	0.911	0.250	0.700	0.000	-	0.625	0.956
All Vehicles (no classification)	1761	7	13	-	1781	18	2077	5	-	2100	1	14	0	-	15	3896
% All Vehicles (no classification)	100.0	100.0	100.0	-	100.0	100.0	100.0	100.0	-	100.0	100.0	100.0	-	-	100.0	100.0
Pedestrians	-	-	-	2	-	-	-	-	0	-	-	-	-	8	-	-
% Pedestrians	-	-	-	100.0	-	-	-	-	-	-	-	-	-	100.0	-	-

CJ Hensch & Associates, Inc.
kh@cjhensch.com
5215 Sycamore Ave

Pasadena, Texas, United States 77503
281-487-5417

Count Name: Midway Road at Proton Drive
Site Code: 10
Start Date: 06/23/2015
Page No: 1

Turning Movement Data

Start Time	Midway Road Southbound						Proton Drive Westbound						Midway Road Northbound						Proton Drive Eastbound						
	Left	Thru	Right	U-Turn	Peds	App. Total	Left	Thru	Right	U-Turn	Peds	App. Total	Left	Thru	Right	U-Turn	Peds	App. Total	Left	Thru	Right	U-Turn	Peds	App. Total	Int. Total
7:00 AM	28	333	12	2	0	375	0	0	1	0	0	1	8	204	1	0	0	213	15	0	21	0	0	36	625
7:15 AM	43	423	20	2	0	488	0	0	3	0	0	3	12	207	1	0	0	220	11	5	31	0	0	47	758
7:30 AM	61	451	19	0	0	531	0	4	7	0	0	11	9	234	2	0	1	245	19	12	44	0	0	75	862
7:45 AM	75	491	20	1	0	587	0	1	8	0	0	9	10	238	2	0	0	250	13	4	29	0	0	46	892
Hourly Total	207	1698	71	5	0	1981	0	5	19	0	0	24	39	883	6	0	1	928	58	21	125	0	0	204	3137
8:00 AM	40	473	17	1	0	531	2	1	6	0	0	9	8	241	5	0	0	254	18	5	41	0	0	64	858
8:15 AM	27	470	18	1	0	516	1	1	7	0	0	9	7	241	2	0	0	250	20	3	42	0	1	65	840
8:30 AM	29	487	13	1	0	530	1	2	5	0	0	8	16	238	3	0	0	257	12	2	30	0	0	44	839
8:45 AM	36	445	11	3	0	495	1	2	5	0	0	8	9	258	8	0	0	275	15	7	27	0	0	49	827
Hourly Total	132	1875	59	6	0	2072	5	6	23	0	0	34	40	978	18	0	0	1036	65	17	140	0	1	222	3364
*** BREAK ***	-	-	-	-	-	-	-	-	-	-	-	-	-	-	-	-	-	-	-	-	-	-	-	-	-
4:30 PM	7	342	18	1	0	368	3	4	34	0	0	41	17	446	8	0	0	471	26	2	22	0	1	50	930
4:45 PM	5	309	12	2	0	328	2	7	18	0	0	27	29	439	3	0	0	471	14	7	18	0	1	39	865
Hourly Total	12	651	30	3	0	696	5	11	52	0	0	68	46	885	11	0	0	942	40	9	40	0	2	89	1795
5:00 PM	10	276	15	1	1	302	9	14	38	0	0	61	32	488	6	1	0	527	35	2	23	0	2	60	950
5:15 PM	9	314	8	4	0	335	2	6	25	0	0	33	34	470	6	2	0	512	16	0	24	0	2	40	920
5:30 PM	6	427	11	2	0	446	0	7	31	0	0	38	37	555	2	1	1	595	22	2	24	0	3	48	1127
5:45 PM	6	413	15	2	1	436	2	6	24	0	0	32	31	411	2	0	1	444	22	1	12	0	0	35	947
Hourly Total	31	1430	49	9	2	1519	13	33	118	0	0	164	134	1924	16	4	2	2078	95	5	83	0	7	183	3944
6:00 PM	7	388	18	6	0	419	2	7	23	0	0	32	25	507	4	1	0	537	25	2	25	0	0	52	1040
6:15 PM	8	416	20	4	0	448	2	2	14	0	0	18	19	434	0	0	0	453	17	0	11	0	3	28	947
6:30 PM	0	0	0	0	0	0	0	0	0	0	0	0	0	0	0	0	0	0	0	0	0	0	0	0	0
Grand Total	397	6458	247	33	2	7135	27	64	249	0	0	340	303	5611	55	5	3	5974	300	54	424	0	13	778	14227
Approach %	5.6	90.5	3.5	0.5	-	-	7.9	18.8	73.2	0.0	-	-	5.1	93.9	0.9	0.1	-	-	38.6	6.9	54.5	0.0	-	-	-
Total %	2.8	45.4	1.7	0.2	-	50.2	0.2	0.4	1.8	0.0	-	2.4	2.1	39.4	0.4	0.0	-	42.0	2.1	0.4	3.0	0.0	-	5.5	-
All Vehicles (no classification)	397	6458	247	33	-	7135	27	64	249	0	-	340	303	5611	55	5	-	5974	300	54	424	0	-	778	14227
% All Vehicles (no classification)	100.0	100.0	100.0	100.0	-	100.0	100.0	100.0	100.0	-	-	100.0	100.0	100.0	100.0	100.0	-	100.0	100.0	100.0	100.0	-	-	100.0	100.0
Pedestrians	-	-	-	-	2	-	-	-	-	-	0	-	-	-	-	-	3	-	-	-	-	-	13	-	-
% Pedestrians	-	-	-	-	100.0	-	-	-	-	-	-	-	-	-	-	-	100.0	-	-	-	-	-	100.0	-	-

CJ Hensch & Associates, Inc.
kh@cjhensch.com
5215 Sycamore Ave

Pasadena, Texas, United States 77503
281-487-5417

Count Name: Midway Road at Proton Drive
Site Code: 10
Start Date: 06/23/2015

Turning Movement Peak Hour Data (7:30 AM)

Start Time	Midway Road Southbound						Proton Drive Westbound						Midway Road Northbound						Proton Drive Eastbound						
	Left	Thru	Right	U-Turn	Peds	App. Total	Left	Thru	Right	U-Turn	Peds	App. Total	Left	Thru	Right	U-Turn	Peds	App. Total	Left	Thru	Right	U-Turn	Peds	App. Total	Int. Total
7:30 AM	61	451	19	0	0	531	0	4	7	0	0	11	9	234	2	0	1	245	19	12	44	0	0	75	862
7:45 AM	75	491	20	1	0	587	0	1	8	0	0	9	10	238	2	0	0	250	13	4	29	0	0	46	892
8:00 AM	40	473	17	1	0	531	2	1	6	0	0	9	8	241	5	0	0	254	18	5	41	0	0	64	858
8:15 AM	27	470	18	1	0	516	1	1	7	0	0	9	7	241	2	0	0	250	20	3	42	0	1	65	840
Total	203	1885	74	3	0	2165	3	7	28	0	0	38	34	954	11	0	1	999	70	24	156	0	1	250	3452
Approach %	9.4	87.1	3.4	0.1	-	-	7.9	18.4	73.7	0.0	-	-	3.4	95.5	1.1	0.0	-	-	28.0	9.6	62.4	0.0	-	-	-
Total %	5.9	54.6	2.1	0.1	-	62.7	0.1	0.2	0.8	0.0	-	1.1	1.0	27.6	0.3	0.0	-	28.9	2.0	0.7	4.5	0.0	-	7.2	-
PHF	0.677	0.960	0.925	0.750	-	0.922	0.375	0.438	0.875	0.000	-	0.864	0.850	0.990	0.550	0.000	-	0.983	0.875	0.500	0.886	0.000	-	0.833	0.967
All Vehicles (no classification)	203	1885	74	3	-	2165	3	7	28	0	-	38	34	954	11	0	-	999	70	24	156	0	-	250	3452
% All Vehicles (no classification)	100.0	100.0	100.0	100.0	-	100.0	100.0	100.0	100.0	-	-	100.0	100.0	100.0	100.0	-	-	100.0	100.0	100.0	100.0	-	-	100.0	100.0
Pedestrians	-	-	-	-	0	-	-	-	-	-	0	-	-	-	-	-	1	-	-	-	-	-	1	-	-
% Pedestrians	-	-	-	-	-	-	-	-	-	-	-	-	-	-	-	-	100.0	-	-	-	-	-	100.0	-	-

CJ Hensch & Associates, Inc.
kh@cjhensch.com
5215 Sycamore Ave

Pasadena, Texas, United States 77503
281-487-5417

Count Name: Midway Road at Proton Drive
Site Code: 10
Start Date: 06/23/2015

Turning Movement Peak Hour Data (5:30 PM)

Start Time	Midway Road Southbound						Proton Drive Westbound						Midway Road Northbound						Proton Drive Eastbound						
	Left	Thru	Right	U-Turn	Peds	App. Total	Left	Thru	Right	U-Turn	Peds	App. Total	Left	Thru	Right	U-Turn	Peds	App. Total	Left	Thru	Right	U-Turn	Peds	App. Total	Int. Total
5:30 PM	6	427	11	2	0	446	0	7	31	0	0	38	37	555	2	1	1	595	22	2	24	0	3	48	1127
5:45 PM	6	413	15	2	1	436	2	6	24	0	0	32	31	411	2	0	1	444	22	1	12	0	0	35	947
6:00 PM	7	388	18	6	0	419	2	7	23	0	0	32	25	507	4	1	0	537	25	2	25	0	0	52	1040
6:15 PM	8	416	20	4	0	448	2	2	14	0	0	18	19	434	0	0	0	453	17	0	11	0	3	28	947
Total	27	1644	64	14	1	1749	6	22	92	0	0	120	112	1907	8	2	2	2029	86	5	72	0	6	163	4061
Approach %	1.5	94.0	3.7	0.8	-	-	5.0	18.3	76.7	0.0	-	-	5.5	94.0	0.4	0.1	-	-	52.8	3.1	44.2	0.0	-	-	-
Total %	0.7	40.5	1.6	0.3	-	43.1	0.1	0.5	2.3	0.0	-	3.0	2.8	47.0	0.2	0.0	-	50.0	2.1	0.1	1.8	0.0	-	4.0	-
PHF	0.844	0.963	0.800	0.583	-	0.976	0.750	0.786	0.742	0.000	-	0.789	0.757	0.859	0.500	0.500	-	0.853	0.860	0.625	0.720	0.000	-	0.784	0.901
All Vehicles (no classification)	27	1644	64	14	-	1749	6	22	92	0	-	120	112	1907	8	2	-	2029	86	5	72	0	-	163	4061
% All Vehicles (no classification)	100.0	100.0	100.0	100.0	-	100.0	100.0	100.0	100.0	-	-	100.0	100.0	100.0	100.0	100.0	-	100.0	100.0	100.0	100.0	-	-	100.0	100.0
Pedestrians	-	-	-	-	1	-	-	-	-	-	0	-	-	-	-	-	2	-	-	-	-	-	6	-	-
% Pedestrians	-	-	-	-	100.0	-	-	-	-	-	-	-	-	-	-	-	100.0	-	-	-	-	-	100.0	-	-

Synchro*TM* Output - 2015 Existing Traffic

Movement	EBL	EBT	EBR	WBL	WBT	WBR	NBL	NBT	NBR	SBL	SBT	SBR
Lane Configurations												
Volume (veh/h)	17	10	7	18	17	157	39	1053	48	209	2352	57
Number	3	8	18	7	4	14	1	6	16	5	2	12
Initial Q (Qb), veh	0	0	0	0	0	0	0	0	0	0	0	0
Ped-Bike Adj(A_pbT)	1.00		1.00	1.00		1.00	1.00		1.00	1.00		1.00
Parking Bus Adj	1.00	1.00	1.00	1.00	1.00	1.00	1.00	1.00	1.00	1.00	1.00	1.00
Adj Sat Flow veh/h/ln	186.3	186.3	190.0	186.3	193.7	186.3	186.3	186.3	190.0	186.3	186.3	190.0
Lanes	1	1	0	1	1	1	1	3	0	1	3	0
Cap, veh/h	285	148	116	314	299	244	155	3383	166	508	3676	88
Arrive On Green	0.04	0.15	0.14	0.04	0.15	0.15	0.09	1.00	1.00	0.08	0.68	0.67
Sat Flow, veh/h	1774	968	761	1774	1937	1583	1774	5283	260	1774	5435	130
Grp Volume(v), veh/h	25	0	25	28	23	191	60	773	378	275	2007	1004
Grp Sat Flow(s),veh/h/ln	1774	0	1729	1774	1937	1583	1774	1863	1817	1774	1863	1840
Q Serve(g_s), s	1.6	0.0	1.7	1.8	1.4	15.8	1.5	0.0	0.0	5.7	51.4	52.9
Cycle Q Clear(g_c), s	1.6	0.0	1.7	1.8	1.4	15.8	1.5	0.0	0.0	5.7	51.4	52.9
Prop In Lane	1.00		0.44	1.00		1.00	1.00		0.14	1.00		0.07
Lane Grp Cap(c), veh/h	285	0	265	314	299	244	155	2386	1164	508	2520	1244
V/C Ratio(X)	0.09	0.00	0.09	0.09	0.08	0.78	0.39	0.32	0.32	0.54	0.80	0.81
Avail Cap(c_a), veh/h	351	0	394	377	442	361	271	2386	1164	651	2520	1244
HCM Platoon Ratio	1.00	1.00	1.00	1.00	1.00	1.00	2.00	2.00	2.00	1.00	1.00	1.00
Upstream Filter(I)	1.00	0.00	1.00	1.00	1.00	1.00	1.00	1.00	1.00	1.00	1.00	1.00
Uniform Delay (d), s/veh	45.3	0.0	49.8	45.1	49.2	55.3	25.9	0.0	0.0	4.6	15.4	15.7
Incr Delay (d2), s/veh	0.1	0.0	0.2	0.1	0.1	6.5	1.6	0.4	0.7	0.9	2.7	5.7
Initial Q Delay(d3),s/veh	0.0	0.0	0.0	0.0	0.0	0.0	0.0	0.0	0.0	0.0	0.0	0.0
%ile Back of Q (50%), veh/ln	0.7	0.0	0.8	0.8	0.7	6.9	2.0	0.1	0.2	2.1	22.7	24.0
Lane Grp Delay (d), s/veh	45.5	0.0	49.9	45.3	49.3	61.8	27.5	0.4	0.7	5.5	18.2	21.4
Lane Grp LOS	D		D	D	D	E	C	A	A	A	B	C
Approach Vol, veh/h		50			242			1211			3286	
Approach Delay, s/veh		47.7			58.7			1.8			18.1	
Approach LOS		D			E			A			B	

Timer												
Assigned Phs	3	8		7	4		1	6		5	2	
Phs Duration (G+Y+Rc), s	7.9	23.8		8.1	24.0		9.1	90.1		14.0	95.0	
Change Period (Y+Rc), s	5.5	5.5		5.5	5.5		5.5	5.5		5.5	5.5	
Max Green Setting (Gmax), s	7.5	28.5		7.5	28.5		12.5	82.5		19.5	89.5	
Max Q Clear Time (g_c+I1), s	3.6	3.7		3.8	17.8		3.5	2.0		7.7	54.9	
Green Ext Time (p_c), s	0.0	1.0		0.0	0.7		0.1	61.3		0.8	30.5	

Intersection Summary												
HCM 2010 Ctrl Delay			16.3									
HCM 2010 LOS			B									

Notes

Movement	EBU	EBT	EBR	WBL	WBT	NBL	NBR
Lane Configurations							
Volume (veh/h)	2	1707	18	104	1505	8	70
Number		6	16	5	2	7	14
Initial Q (Qb), veh		0	0	0	0	0	0
Ped-Bike Adj(A_pbT)			1.00	1.00		1.00	1.00
Parking Bus Adj		1.00	1.00	1.00	1.00	1.00	1.00
Adj Sat Flow veh/h/ln		186.3	190.0	186.3	186.3	186.3	186.3
Lanes		3	0	1	3	1	2
Cap, veh/h		4427	58	192	4987	109	194
Arrive On Green		0.80	0.79	0.06	0.89	0.06	0.06
Sat Flow, veh/h		5504	72	1774	5588	1774	3167
Grp Volume(v), veh/h		1191	592	133	1552	13	82
Grp Sat Flow(s),veh/h/ln		1863	1850	1774	1863	1774	1583
Q Serve(g_s), s		11.9	11.9	3.7	5.4	0.9	3.2
Cycle Q Clear(g_c), s		11.9	11.9	3.7	5.4	0.9	3.2
Prop In Lane			0.04	1.00		1.00	1.00
Lane Grp Cap(c), veh/h		2996	1488	192	4987	109	194
V/C Ratio(X)		0.40	0.40	0.69	0.31	0.12	0.42
Avail Cap(c_a), veh/h		2996	1488	283	4987	439	784
HCM Platoon Ratio		1.00	1.00	1.00	1.00	1.00	1.00
Upstream Filter(I)		1.00	1.00	1.00	1.00	1.00	1.00
Uniform Delay (d), s/veh		3.6	3.7	53.2	1.0	57.4	58.5
Incr Delay (d2), s/veh		0.4	0.8	4.4	0.2	0.5	1.5
Initial Q Delay(d3),s/veh		0.0	0.0	0.0	0.0	0.0	0.0
%ile Back of Q (50%), veh/ln		4.1	4.4	4.6	0.9	0.4	0.0
Lane Grp Delay (d), s/veh		4.0	4.4	57.6	1.2	57.9	60.0
Lane Grp LOS		A	A	E	A	E	E
Approach Vol, veh/h		1783			1685	95	
Approach Delay, s/veh		4.2			5.7	59.7	
Approach LOS		A			A	E	

Timer							
Assigned Phs		6		5	2		
Phs Duration (G+Y+Rc), s		107.0		11.4	118.4		
Change Period (Y+Rc), s		5.5		5.5	5.5		
Max Green Setting (Gmax), s		101.5		12.5	106.5		
Max Q Clear Time (g_c+I1), s		13.9		5.7	7.4		
Green Ext Time (p_c), s		42.1		0.2	44.1		

Intersection Summary							
HCM 2010 Ctrl Delay			6.4				
HCM 2010 LOS			A				

Notes

Movement	EBL	EBT	EBR	WBL	WBT	WBR	NBL	NBT	NBR	SBL	SBT	SBR
Lane Configurations												
Volume (veh/h)	133	991	273	299	824	327	132	603	230	474	1690	142
Number	1	6	16	5	2	12	7	4	14	3	8	18
Initial Q (Qb), veh	0	0	0	0	0	0	0	0	0	0	0	0
Ped-Bike Adj(A_pbT)	1.00		1.00	1.00		1.00	1.00		1.00	1.00		1.00
Parking Bus Adj	1.00	1.00	1.00	1.00	1.00	1.00	1.00	1.00	1.00	1.00	1.00	1.00
Adj Sat Flow veh/h/ln	186.3	186.3	186.3	186.3	186.3	190.0	186.3	186.3	186.3	186.3	186.3	186.3
Lanes	2	3	1	2	3	0	2	3	1	2	3	1
Cap, veh/h	258	1502	426	559	1345	549	258	1886	534	538	2340	663
Arrive On Green	0.15	0.54	0.54	0.16	0.36	0.34	0.15	0.68	0.00	0.31	0.84	0.00
Sat Flow, veh/h	3442	5588	1583	3442	3774	1542	3442	5588	1583	3442	5588	1583
Grp Volume(v), veh/h	225	1043	346	305	884	379	152	663	0	504	1988	0
Grp Sat Flow(s),veh/h/ln	1721	1863	1583	1721	1863	1591	1721	1863	1583	1721	1863	1583
Q Serve(g_s), s	10.2	22.0	28.7	13.0	32.1	32.4	6.6	8.1	0.0	22.8	32.1	0.0
Cycle Q Clear(g_c), s	10.2	22.0	28.7	13.0	32.1	32.4	6.6	8.1	0.0	22.8	32.1	0.0
Prop In Lane	1.00		1.00	1.00		0.97	1.00		1.00	1.00		1.00
Lane Grp Cap(c), veh/h	258	1502	426	559	1327	567	258	1886	534	538	2340	663
V/C Ratio(X)	0.87	0.69	0.81	0.55	0.67	0.67	0.59	0.35	0.00	0.94	0.85	0.00
Avail Cap(c_a), veh/h	258	1502	426	559	1327	567	258	1886	534	538	2340	663
HCM Platoon Ratio	2.00	2.00	2.00	1.00	1.00	1.00	2.00	2.00	2.00	2.00	2.00	2.00
Upstream Filter(I)	1.00	1.00	1.00	1.00	1.00	1.00	1.00	1.00	0.00	1.00	1.00	0.00
Uniform Delay (d), s/veh	67.2	32.2	33.7	61.6	43.5	44.4	65.7	18.5	0.0	54.2	10.2	0.0
Incr Delay (d2), s/veh	30.9	2.7	15.5	3.8	2.7	6.1	9.5	0.5	0.0	26.0	4.1	0.0
Initial Q Delay(d3),s/veh	0.0	0.0	0.0	0.0	0.0	0.0	0.0	0.0	0.0	0.0	0.0	0.0
%ile Back of Q (50%), veh/ln	5.3	8.9	11.3	6.1	15.6	14.0	3.1	3.2	0.0	11.0	5.7	0.0
Lane Grp Delay (d), s/veh	98.1	34.8	49.2	65.4	46.1	50.6	75.2	19.1	0.0	80.3	14.3	0.0
Lane Grp LOS	F	C	D	E	D	D	E	B		F	B	
Approach Vol, veh/h		1614			1568			815			2492	
Approach Delay, s/veh		46.7			50.9			29.5			27.6	
Approach LOS		D			D			C			C	

Timer												
Assigned Phs	1	6		5	2		7	4		3	8	
Phs Duration (G+Y+Rc), s	15.0	46.0		29.0	60.0		15.0	57.0		28.0	70.0	
Change Period (Y+Rc), s	6.0	6.0		6.0	6.0		6.0	6.0		6.0	6.0	
Max Green Setting (Gmax), s	9.0	40.0		23.0	54.0		9.0	51.0		22.0	64.0	
Max Q Clear Time (g_c+I1), s	12.2	30.7		15.0	34.4		8.6	10.1		24.8	34.1	
Green Ext Time (p_c), s	0.0	5.2		0.8	6.0		0.0	3.3		0.0	17.4	

Intersection Summary												
HCM 2010 Ctrl Delay			38.2									
HCM 2010 LOS			D									

Notes

Movement	EBL	EBT	EBR	WBL	WBT	WBR	NBL	NBT	NBR	SBL	SBT	SBR
Lane Configurations												
Volume (veh/h)	32	37	83	33	9	47	42	908	29	41	2134	32
Number	3	8	18	7	4	14	1	6	16	5	2	12
Initial Q (Qb), veh	0	0	0	0	0	0	0	0	0	0	0	0
Ped-Bike Adj(A_pbT)	1.00		1.00	1.00		1.00	1.00		1.00	1.00		1.00
Parking Bus Adj	1.00	1.00	1.00	1.00	1.00	1.00	1.00	1.00	1.00	1.00	1.00	1.00
Adj Sat Flow veh/h/ln	186.3	193.7	186.3	186.3	193.7	190.0	186.3	186.3	186.3	186.3	193.7	186.3
Lanes	1	1	1	1	1	0	1	3	1	1	3	1
Cap, veh/h	240	209	171	256	26	148	224	3863	1094	542	4030	1098
Arrive On Green	0.06	0.11	0.11	0.05	0.10	0.09	0.09	1.00	1.00	0.10	1.00	1.00
Sat Flow, veh/h	1774	1937	1583	1774	253	1432	1774	5588	1583	1774	5812	1583
Grp Volume(v), veh/h	57	54	104	50	0	80	43	936	38	53	2540	40
Grp Sat Flow(s),veh/h/ln	1774	1937	1583	1774	0	1685	1774	1863	1583	1774	1937	1583
Q Serve(g_s), s	3.4	3.1	7.6	3.0	0.0	5.5	0.8	0.0	0.0	0.9	0.0	0.0
Cycle Q Clear(g_c), s	3.4	3.1	7.6	3.0	0.0	5.5	0.8	0.0	0.0	0.9	0.0	0.0
Prop In Lane	1.00		1.00	1.00		0.85	1.00		1.00	1.00		1.00
Lane Grp Cap(c), veh/h	240	209	171	256	0	174	224	3863	1094	542	4030	1098
V/C Ratio(X)	0.24	0.26	0.61	0.20	0.00	0.46	0.19	0.24	0.03	0.10	0.63	0.04
Avail Cap(c_a), veh/h	311	670	547	335	0	582	289	3863	1094	603	4030	1098
HCM Platoon Ratio	1.00	1.00	1.00	1.00	1.00	1.00	2.00	2.00	2.00	2.00	2.00	2.00
Upstream Filter(I)	1.00	1.00	1.00	1.00	0.00	1.00	1.00	1.00	1.00	1.00	1.00	1.00
Uniform Delay (d), s/veh	43.8	49.7	51.8	44.4	0.0	51.9	4.1	0.0	0.0	4.0	0.0	0.0
Incr Delay (d2), s/veh	0.5	0.6	3.5	0.4	0.0	1.9	0.4	0.1	0.1	0.1	0.8	0.1
Initial Q Delay(d3),s/veh	0.0	0.0	0.0	0.0	0.0	0.0	0.0	0.0	0.0	0.0	0.0	0.0
%ile Back of Q (50%), veh/ln	1.6	1.6	3.3	1.4	0.0	2.5	0.3	0.1	0.0	0.3	0.3	0.0
Lane Grp Delay (d), s/veh	44.3	50.4	55.2	44.8	0.0	53.8	4.5	0.1	0.1	4.1	0.8	0.1
Lane Grp LOS	D	D	E	D		D	A	A	A	A	A	A
Approach Vol, veh/h		215			130			1017			2633	
Approach Delay, s/veh		51.1			50.3			0.3			0.8	
Approach LOS		D			D			A			A	

Timer												
Assigned Phs	3	8		7	4		1	6		5	2	
Phs Duration (G+Y+Rc), s	10.1	16.1		9.6	15.6		8.6	87.0		8.8	87.3	
Change Period (Y+Rc), s	5.5	5.5		5.5	5.5		5.5	5.5		5.5	5.5	
Max Green Setting (Gmax), s	9.5	39.5		9.5	39.5		7.5	81.5		7.5	81.5	
Max Q Clear Time (g_c+I1), s	5.4	9.6		5.0	7.5		2.8	2.0		2.9	2.0	
Green Ext Time (p_c), s	0.0	1.0		0.0	1.0		0.0	50.9		0.0	50.9	

Intersection Summary												
HCM 2010 Ctrl Delay			5.0									
HCM 2010 LOS			A									

Notes

Movement	EBL	EBT	EBR	WBL	WBT	WBR	NBL	NBT	NBR	SBL	SBT	SBR
Lane Configurations												
Volume (veh/h)	70	24	156	3	7	28	34	954	11	206	1885	74
Number	3	8	18	7	4	14	1	6	16	5	2	12
Initial Q (Qb), veh	0	0	0	0	0	0	0	0	0	0	0	0
Ped-Bike Adj(A_pbT)	1.00		1.00	1.00		1.00	1.00		1.00	1.00		1.00
Parking Bus Adj	1.00	1.00	1.00	1.00	1.00	1.00	1.00	1.00	1.00	1.00	1.00	1.00
Adj Sat Flow veh/h/ln	186.3	193.7	190.0	190.0	186.3	186.3	186.3	186.3	190.0	186.3	186.3	190.0
Lanes	1	1	0	0	1	1	1	3	0	1	3	0
Cap, veh/h	250	79	241	55	110	140	219	3635	58	499	3749	152
Arrive On Green	0.08	0.19	0.19	0.09	0.09	0.09	0.04	0.66	0.65	0.16	1.00	1.00
Sat Flow, veh/h	1774	421	1289	224	1250	1583	1774	5486	87	1774	5334	216
Grp Volume(v), veh/h	89	0	256	14	0	30	35	728	361	275	1641	811
Grp Sat Flow(s),veh/h/ln	1774	0	1710	1474	0	1583	1774	1863	1847	1774	1863	1825
Q Serve(g_s), s	5.7	0.0	18.7	0.0	0.0	2.3	0.8	10.7	10.7	5.4	0.0	0.0
Cycle Q Clear(g_c), s	5.7	0.0	18.7	5.8	0.0	2.3	0.8	10.7	10.7	5.4	0.0	0.0
Prop In Lane	1.00		0.75	0.29		1.00	1.00		0.05	1.00		0.12
Lane Grp Cap(c), veh/h	250	0	320	166	0	140	219	2468	1224	499	2618	1282
V/C Ratio(X)	0.36	0.00	0.80	0.08	0.00	0.21	0.16	0.29	0.30	0.55	0.63	0.63
Avail Cap(c_a), veh/h	318	0	627	386	0	363	295	2468	1224	653	2618	1282
HCM Platoon Ratio	1.00	1.00	1.00	1.00	1.00	1.00	1.00	1.00	1.00	2.00	2.00	2.00
Upstream Filter(I)	1.00	0.00	1.00	1.00	0.00	1.00	1.00	1.00	1.00	1.00	1.00	1.00
Uniform Delay (d), s/veh	46.6	0.0	50.8	54.8	0.0	55.4	5.9	9.3	9.3	5.1	0.0	0.0
Incr Delay (d2), s/veh	0.9	0.0	4.6	0.2	0.0	0.8	0.3	0.3	0.6	1.0	1.1	2.4
Initial Q Delay(d3),s/veh	0.0	0.0	0.0	0.0	0.0	0.0	0.0	0.0	0.0	0.0	0.0	0.0
%ile Back of Q (50%), veh/ln	2.7	0.0	8.7	0.4	0.0	0.0	0.3	4.6	4.6	1.5	0.4	0.8
Lane Grp Delay (d), s/veh	47.5	0.0	55.4	55.0	0.0	56.2	6.2	9.6	9.9	6.0	1.1	2.4
Lane Grp LOS	D		E	E		E	A	A	A	A	A	A
Approach Vol, veh/h		345			44			1124			2727	
Approach Delay, s/veh		53.4			55.8			9.6			2.0	
Approach LOS		D			E			A			A	

Timer												
Assigned Phs	3	8			4		1	6		5	2	
Phs Duration (G+Y+Rc), s	13.0	27.5			14.6		8.4	89.7		13.7	95.0	
Change Period (Y+Rc), s	5.5	5.5			5.5		5.5	5.5		5.5	5.5	
Max Green Setting (Gmax), s	12.5	45.5			27.5		8.5	78.5		19.5	89.5	
Max Q Clear Time (g_c+I1), s	7.7	20.7			7.8		2.8	12.7		7.4	2.0	
Green Ext Time (p_c), s	0.1	1.3			1.2		0.0	40.4		0.8	47.0	

Intersection Summary												
HCM 2010 Ctrl Delay			8.8									
HCM 2010 LOS			A									

Notes

Movement	EBL	EBT	EBR	WBL	WBT	WBR	NBL	NBT	NBR	SBL	SBT	SBR
Lane Configurations												
Volume (veh/h)	8	1386	12	20	1054	0	18	0	20	9	1	2
Number	1	6	16	5	2	12	7	4	14	3	8	18
Initial Q (Qb), veh	0	0	0	0	0	0	0	0	0	0	0	0
Ped-Bike Adj(A_pbT)	1.00		1.00	1.00		1.00	1.00		1.00	1.00		1.00
Parking Bus Adj	1.00	1.00	1.00	1.00	1.00	1.00	1.00	1.00	1.00	1.00	1.00	1.00
Adj Sat Flow veh/h/ln	186.3	186.3	186.3	186.3	186.3	190.0	186.3	186.3	190.0	186.3	186.3	190.0
Lanes	1	3	1	1	3	0	2	1	0	1	1	0
Cap, veh/h	472	4231	1199	409	4281	0	404	0	98	174	55	42
Arrive On Green	0.07	1.00	1.00	0.09	1.00	0.00	0.04	0.00	0.05	0.03	0.06	0.04
Sat Flow, veh/h	1774	5588	1583	1774	5588	0	3442	0	1583	1774	990	742
Grp Volume(v), veh/h	18	1459	22	38	1211	0	27	0	43	16	0	7
Grp Sat Flow(s),veh/h/ln	1774	1863	1583	1774	1863	0	1721	0	1583	1774	0	1732
Q Serve(g_s), s	0.2	0.0	0.0	0.5	0.0	0.0	0.8	0.0	3.1	1.0	0.0	0.5
Cycle Q Clear(g_c), s	0.2	0.0	0.0	0.5	0.0	0.0	0.8	0.0	3.1	1.0	0.0	0.5
Prop In Lane	1.00		1.00	1.00		0.00	1.00		1.00	1.00		0.43
Lane Grp Cap(c), veh/h	472	4231	1199	409	4281	0	404	0	98	174	0	97
V/C Ratio(X)	0.04	0.34	0.02	0.09	0.28	0.00	0.07	0.00	0.44	0.09	0.00	0.07
Avail Cap(c_a), veh/h	558	4231	1199	479	4281	0	552	0	466	306	0	554
HCM Platoon Ratio	2.00	2.00	2.00	2.00	2.00	2.00	1.00	1.00	1.00	1.00	1.00	1.00
Upstream Filter(I)	0.89	0.89	0.89	1.00	1.00	0.00	1.00	0.00	1.00	1.00	0.00	1.00
Uniform Delay (d), s/veh	2.5	0.0	0.0	2.1	0.0	0.0	48.2	0.0	54.5	49.6	0.0	53.5
Incr Delay (d2), s/veh	0.0	0.2	0.0	0.1	0.2	0.0	0.1	0.0	3.1	0.2	0.0	0.3
Initial Q Delay(d3),s/veh	0.0	0.0	0.0	0.0	0.0	0.0	0.0	0.0	0.0	0.0	0.0	0.0
%ile Back of Q (50%), veh/ln	0.1	0.1	0.0	0.1	0.1	0.0	0.4	0.0	1.4	0.5	0.0	0.2
Lane Grp Delay (d), s/veh	2.5	0.2	0.0	2.2	0.2	0.0	48.3	0.0	57.5	49.8	0.0	53.8
Lane Grp LOS	A	A	A	A	A		D		E	D		D
Approach Vol, veh/h		1499			1249			70			23	
Approach Delay, s/veh		0.2			0.2			54.0			51.0	
Approach LOS		A			A			D			D	

Timer												
Assigned Phs	1	6		5	2		7	4		3	8	
Phs Duration (G+Y+Rc), s	7.3	93.0		8.4	94.1		7.9	10.4		7.1	9.7	
Change Period (Y+Rc), s	5.5	5.5		5.5	5.5		5.5	5.5		5.5	5.5	
Max Green Setting (Gmax), s	7.5	87.5		7.5	87.5		7.5	32.5		10.5	35.5	
Max Q Clear Time (g_c+I1), s	2.2	2.0		2.5	2.0		2.8	5.1		3.0	2.5	
Green Ext Time (p_c), s	0.0	27.8		0.0	27.8		0.0	0.1		0.0	0.2	

Intersection Summary												
HCM 2010 Ctrl Delay			2.0									
HCM 2010 LOS			A									

Notes

Lane Group	EBL	EBT	EBR	WBL	WBT	WBR	NBL	NBT	NBR	SBL	SBT	SBR
Lane Configurations												
Volume (vph)	140	1308	42	74	941	46	24	50	46	27	66	118
Ideal Flow (vphpl)	1900	1900	1900	1900	1900	1900	1900	1900	1900	1900	1900	1900
Storage Length (ft)	150		0	200		0	100		140	100		120
Storage Lanes	1		0	1		0	1		1	1		0
Taper Length (ft)	25			25			25			25		
Lane Util. Factor	1.00	0.91	0.91	1.00	0.91	0.91	1.00	1.00	1.00	1.00	1.00	1.00
Frt		0.994			0.993				0.850			0.850
Flt Protected	0.950			0.950			0.950			0.950		
Satd. Flow (prot)	1770	5055	0	1770	5050	0	1770	1863	1583	1770	1863	1583
Flt Permitted	0.179			0.156			0.553			0.701		
Satd. Flow (perm)	333	5055	0	291	5050	0	1030	1863	1583	1306	1863	1583
Right Turn on Red			Yes			Yes			Yes			Yes
Satd. Flow (RTOR)		6			7				170			211
Link Speed (mph)		40			40			30			30	
Link Distance (ft)		907			950			997			322	
Travel Time (s)		15.5			16.2			22.7			7.3	
Peak Hour Factor	0.59	0.94	0.68	0.90	0.89	0.86	0.89	0.94	0.90	0.73	0.91	0.68
Adj. Flow (vph)	237	1391	62	82	1057	53	27	53	51	37	73	174
Shared Lane Traffic (%)												
Lane Group Flow (vph)	237	1453	0	82	1110	0	27	53	51	37	73	174
Enter Blocked Intersection	No	No	No	No	No	No	No	No	No	No	No	No
Lane Alignment	Left	Left	Right	Left	Left	Right	Left	Left	Right	Left	Left	Right
Median Width(ft)		12			12			12			12	
Link Offset(ft)		0			0			0			0	
Crosswalk Width(ft)		16			16			16			16	
Two way Left Turn Lane												
Headway Factor	1.00	1.00	1.00	1.00	1.00	1.00	1.00	1.00	1.00	1.00	1.00	1.00
Turning Speed (mph)	15		9	15		9	15		9	15		9
Number of Detectors	1	1		1	1		1	1	1	1	1	1
Detector Template												
Leading Detector (ft)	50	50		50	50		50	50	50	50	50	50
Trailing Detector (ft)	0	0		0	0		0	0	0	0	0	0
Detector 1 Position(ft)	0	0		0	0		0	0	0	0	0	0
Detector 1 Size(ft)	50	50		50	50		50	50	50	50	50	50
Detector 1 Type	Cl+Ex	Cl+Ex		Cl+Ex	Cl+Ex		Cl+Ex	Cl+Ex	Cl+Ex	Cl+Ex	Cl+Ex	Cl+Ex
Detector 1 Channel												
Detector 1 Extend (s)	0.0	0.0		0.0	0.0		0.0	0.0	0.0	0.0	0.0	0.0
Detector 1 Queue (s)	0.0	0.0		0.0	0.0		0.0	0.0	0.0	0.0	0.0	0.0
Detector 1 Delay (s)	0.0	0.0		0.0	0.0		0.0	0.0	0.0	0.0	0.0	0.0
Turn Type	pm+pt	NA		pm+pt	NA		custom	NA	Perm	pm+pt	NA	custom
Protected Phases	1	6 14		13	2 10		15	4 12		11	8 16	
Permitted Phases	6 14			2 10			4		4 12	8 16		8
Detector Phase	1	6 14		13	2 10		15	4 12	4 12	11	8 16	8
Switch Phase												
Minimum Initial (s)	4.0			4.0			4.0			4.0		4.0
Minimum Split (s)	13.0			13.0			13.0			13.0		16.0
Total Split (s)	20.0			18.0			13.0			13.0		20.0
Total Split (%)	12.5%			11.3%			8.1%			8.1%		12.5%

Sam's Club Redevelopment - TIA
Lanes, Volumes, Timings
2015 Existing - AM
4296: Surveyor Blvd & Beltline Rd

Lane Group	ø2	ø4	ø6	ø10	ø12	ø14	ø16
Lane Configurations							
Volume (vph)							
Ideal Flow (vphpl)							
Storage Length (ft)							
Storage Lanes							
Taper Length (ft)							
Lane Util. Factor							
Frt							
Flt Protected							
Satd. Flow (prot)							
Flt Permitted							
Satd. Flow (perm)							
Right Turn on Red							
Satd. Flow (RTOR)							
Link Speed (mph)							
Link Distance (ft)							
Travel Time (s)							
Peak Hour Factor							
Adj. Flow (vph)							
Shared Lane Traffic (%)							
Lane Group Flow (vph)							
Enter Blocked Intersection							
Lane Alignment							
Median Width(ft)							
Link Offset(ft)							
Crosswalk Width(ft)							
Two way Left Turn Lane							
Headway Factor							
Turning Speed (mph)							
Number of Detectors							
Detector Template							
Leading Detector (ft)							
Trailing Detector (ft)							
Detector 1 Position(ft)							
Detector 1 Size(ft)							
Detector 1 Type							
Detector 1 Channel							
Detector 1 Extend (s)							
Detector 1 Queue (s)							
Detector 1 Delay (s)							
Turn Type							
Protected Phases	2	4	6	10	12	14	16
Permitted Phases							
Detector Phase							
Switch Phase							
Minimum Initial (s)	4.0	4.0	4.0	4.0	4.0	4.0	4.0
Minimum Split (s)	29.5	16.0	24.5	22.0	22.0	22.0	22.0
Total Split (s)	35.0	20.0	55.0	53.0	19.0	35.0	19.0
Total Split (%)	22%	13%	34%	33%	12%	22%	12%

Lane Group	EBL	EBT	EBR	WBL	WBT	WBR	NBL	NBT	NBR	SBL	SBT	SBR
Maximum Green (s)	14.5			12.5			7.5			7.5		14.5
Yellow Time (s)	3.5			3.5			3.5			3.5		3.5
All-Red Time (s)	2.0			2.0			2.0			2.0		2.0
Lost Time Adjust (s)	-2.5			-2.5			-3.0			-2.5		-2.5
Total Lost Time (s)	3.0			3.0			2.5			3.0		3.0
Lead/Lag	Lead			Lead			Lead			Lead		
Lead-Lag Optimize?	Yes			Yes			Yes			Yes		
Vehicle Extension (s)	3.0			3.0			3.0			3.0		3.0
Recall Mode	None			None			None			None		None
Walk Time (s)												5.0
Flash Dont Walk (s)												2.0
Pedestrian Calls (#/hr)												0
Act Effct Green (s)	96.3	96.3		90.5	90.5		20.4	29.5	29.5	37.8	32.0	10.5
Actuated g/C Ratio	0.60	0.60		0.57	0.57		0.13	0.18	0.18	0.24	0.20	0.07
v/c Ratio	0.71	0.48		0.33	0.39		0.15	0.15	0.12	0.11	0.20	0.58
Control Delay	29.2	9.7		15.8	10.1		33.1	29.6	0.6	23.9	29.2	11.4
Queue Delay	0.0	0.0		0.0	0.0		0.0	0.0	0.0	0.0	0.0	0.0
Total Delay	29.2	9.7		15.8	10.1		33.1	29.6	0.6	23.9	29.2	11.4
LOS	C	A		B	B		C	C	A	C	C	B
Approach Delay		12.4			10.5			19.0			17.6	
Approach LOS		B			B			B			B	

Intersection Summary	
Area Type:	Other
Cycle Length: 160	
Actuated Cycle Length: 160	
Offset: 75 (47%), Referenced to phase 2:WBTL and 6:EBTL, Start of 1st Green	
Natural Cycle: 130	
Control Type: Actuated-Coordinated	
Maximum v/c Ratio: 0.71	
Intersection Signal Delay: 12.4	Intersection LOS: B
Intersection Capacity Utilization 48.5%	ICU Level of Service A
Analysis Period (min) 15	

Splits and Phases: 4296: Surveyor Blvd & Beltline Rd

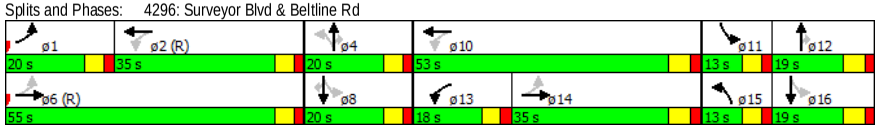

Lane Group	ø2	ø4	ø6	ø10	ø12	ø14	ø16
Maximum Green (s)	29.5	14.5	49.5	47.0	13.0	29.0	13.0
Yellow Time (s)	3.5	3.5	3.5	4.0	4.0	4.0	4.0
All-Red Time (s)	2.0	2.0	2.0	2.0	2.0	2.0	2.0
Lost Time Adjust (s)							
Total Lost Time (s)							
Lead/Lag	Lag				Lag	Lag	Lag
Lead-Lag Optimize?	Yes						
Vehicle Extension (s)	3.0	3.0	3.0	3.0	3.0	3.0	3.0
Recall Mode	C-Max	Min	C-Max	Max	Min	None	Max
Walk Time (s)	5.0	5.0	5.0	5.0	5.0	5.0	5.0
Flash Dont Walk (s)	19.0	24.0	14.0	11.0	11.0	11.0	11.0
Pedestrian Calls (#/hr)	0	0	0	0	0	0	0
Act Effct Green (s)							
Actuated g/C Ratio							
v/c Ratio							
Control Delay							
Queue Delay							
Total Delay							
LOS							
Approach Delay							
Approach LOS							

Intersection Summary

Intersection	
Intersection Delay, s/veh	0.3

Movement	EBT	EBR	WBL	WBT	NBL	NBR
Vol, veh/h	1518	0	0	0	0	20
Conflicting Peds, #/hr	0	0	0	0	0	0
Sign Control	Free	Free	Free	Free	Stop	Stop
RT Channelized	-	None	-	None	-	None
Storage Length	-	140	-	-	-	0
Veh in Median Storage, #	0	-	-	0	0	-
Grade, %	0	-	-	0	0	-
Peak Hour Factor	92	92	92	92	92	92
Heavy Vehicles, %	2	2	2	2	2	2
Mvmt Flow	1650	0	0	0	0	22

Major/Minor	Major1		Major2		Minor1	
Conflicting Flow All	0	0	1650	0	1650	825
Stage 1	-	-	-	-	1650	-
Stage 2	-	-	-	-	0	-
Follow-up Headway	-	-	3.12	-	3.82	3.92
Pot Capacity-1 Maneuver	-	-	188	-	144	271
Stage 1	-	-	-	-	95	-
Stage 2	-	-	-	-	-	-
Time blocked-Platoon, %	-	-		-		
Mov Capacity-1 Maneuver	-	-	188	-	144	271
Mov Capacity-2 Maneuver	-	-	-	-	144	-
Stage 1	-	-	-	-	95	-
Stage 2	-	-	-	-	-	-

Approach	EB	WB	NB
HCM Control Delay, s	0	0	19.4
HCM LOS			C

Minor Lane / Major Mvmt	NBLn1	EBT	EBR	WBL	WBT
Capacity (veh/h)	271	-	-	188	-
HCM Lane V/C Ratio	0.08	-	-	-	-
HCM Control Delay (s)	19.4	-	-	0	-
HCM Lane LOS	C			A	
HCM 95th %tile Q(veh)	0.259	-	-	0	-

Notes

~ : Volume Exceeds Capacity; $: Delay Exceeds 300 Seconds; Error : Computation Not Defined

Intersection	
Intersection Delay, s/veh	1.6

Movement	EBL	EBR	NBL	NBT	SBT	SBR
Vol, veh/h	5	28	23	974	2285	7
Conflicting Peds, #/hr	0	0	0	0	0	0
Sign Control	Stop	Stop	Free	Free	Free	Free
RT Channelized	-	None	-	None	-	None
Storage Length	0	-	125	-	-	-
Veh in Median Storage, #	0	-	-	0	0	-
Grade, %	0	-	-	0	0	-
Peak Hour Factor	92	92	92	92	92	92
Heavy Vehicles, %	2	2	2	2	2	2
Mvmt Flow	5	30	25	1059	2484	8

Major/Minor	Minor2		Major1		Major2	
Conflicting Flow All	3015	1246	2491	0	-	0
Stage 1	2542	-	-	-	-	-
Stage 2	473	-	-	-	-	-
Follow-up Headway	3.82	3.92	3.12	-	-	-
Pot Capacity-1 Maneuver	26	142	70	-	-	-
Stage 1	25	-	-	-	-	-
Stage 2	542	-	-	-	-	-
Time blocked-Platoon, %				-	-	-
Mov Capacity-1 Maneuver	17	142	70	-	-	-
Mov Capacity-2 Maneuver	17	-	-	-	-	-
Stage 1	25	-	-	-	-	-
Stage 2	348	-	-	-	-	-

Approach	EB	NB	SB
HCM Control Delay, s	108.7	1.9	0
HCM LOS	F		

Minor Lane / Major Mvmt	NBL	NBT	EBLn1	SBU	SBT	SBR
Capacity (veh/h)	70	-	67	-	-	-
HCM Lane V/C Ratio	0.357	-	0.535	-	-	-
HCM Control Delay (s)	82.627	-	108.7	-	-	-
HCM Lane LOS	F		F			
HCM 95th %tile Q(veh)	1.345	-	2.206	-	-	-

Notes

~ : Volume Exceeds Capacity; $: Delay Exceeds 300 Seconds; Error : Computation Not Defined

Intersection	
Intersection Delay, s/veh	0.8

Movement	EBL	EBT	EBR	WBL	WBT	WBR	NBL	NBT	NBR	SBL	SBT	SBR
Vol, veh/h	0	0	1	4	0	9	6	966	34	86	2216	0
Conflicting Peds, #/hr	0	0	0	0	0	0	0	0	0	0	0	0
Sign Control	Stop	Stop	Stop	Stop	Stop	Stop	Free	Free	Free	Free	Free	Free
RT Channelized	-	-	None	-	-	None	-	-	None	-	-	None
Storage Length	-	-	-	-	-	0	130	-	-	125	-	-
Veh in Median Storage, #	-	0	-	-	0	-	-	0	-	-	0	-
Grade, %	-	0	-	-	0	-	-	0	-	-	0	-
Peak Hour Factor	92	92	92	92	92	92	92	92	92	92	92	92
Heavy Vehicles, %	2	2	2	2	2	2	2	2	2	2	2	2
Mvmt Flow	0	0	1	4	0	10	7	1050	37	93	2409	0

Major/Minor	Minor2			Minor1			Major1			Major2		
Conflicting Flow All	3029	3696	1204	2232	3678	543	2409	0	0	1087	0	0
Stage 1	2596	2596	-	1082	1082	-	-	-	-	-	-	-
Stage 2	433	1100	-	1150	2596	-	-	-	-	-	-	-
Follow-up Headway	3.82	4.02	3.92	3.82	4.02	3.92	3.12	-	-	3.12	-	-
Pot Capacity-1 Maneuver	14	5	151	45	5	414	77	-	-	355	-	-
Stage 1	14	51	-	175	292	-	-	-	-	-	-	-
Stage 2	523	286	-	189	51	-	-	-	-	-	-	-
Time blocked-Platoon, %								-	-		-	-
Mov Capacity-1 Maneuver	10	3	151	33	3	414	77	-	-	355	-	-
Mov Capacity-2 Maneuver	10	3	-	33	3	-	-	-	-	-	-	-
Stage 1	13	38	-	159	265	-	-	-	-	-	-	-
Stage 2	464	260	-	138	38	-	-	-	-	-	-	-

Approach	EB	WB	NB	SB
HCM Control Delay, s	29	50.7	0.3	0.7
HCM LOS	D	F		

Minor Lane / Major Mvmt	NBL	NBT	NBR	EBLn1	WBLn1	WBLn2	SBL	SBT	SBR
Capacity (veh/h)	77	-	-	151	54	414	355	-	-
HCM Lane V/C Ratio	0.085	-	-	0.007	0.141	0.016	0.263	-	-
HCM Control Delay (s)	56.035	-	-	29	82.3	13.8	18.727	-	-
HCM Lane LOS	F			D	F	B	C		
HCM 95th %tile Q(veh)	0.269	-	-	0.022	0.456	0.048	1.039	-	-

Notes

~ : Volume Exceeds Capacity; $: Delay Exceeds 300 Seconds; Error : Computation Not Defined

Two Way Analysis cannot be performed on an All Way Stop Intersection.

Intersection	
Intersection Delay, s/veh	0.7

Movement	EBL	EBT	EBR	WBL	WBT	WBR	NBL	NBT	NBR	SBL	SBT	SBR
Vol, veh/h	14	1492	34	41	1004	3	0	0	26	0	0	2
Conflicting Peds, #/hr	0	0	0	0	0	0	0	0	0	0	0	0
Sign Control	Free	Free	Free	Free	Free	Free	Stop	Stop	Stop	Stop	Stop	Stop
RT Channelized	-	-	None	-	-	None	-	-	None	-	-	None
Storage Length	160	-	160	175	-	-	-	-	0	-	-	0
Veh in Median Storage, #	-	0	-	-	0	-	-	0	-	-	0	-
Grade, %	-	0	-	-	0	-	-	0	-	-	0	-
Peak Hour Factor	92	92	92	92	92	92	92	92	92	92	92	92
Heavy Vehicles, %	2	2	2	2	2	2	2	2	2	2	2	2
Mvmt Flow	15	1622	37	45	1091	3	0	0	28	0	0	2

Major/Minor	Major1			Major2			Minor1			Minor2		
Conflicting Flow All	1095	0	0	1622	0	0	2178	2836	811	1861	2834	547
Stage 1	-	-	-	-	-	-	1652	1652	-	1182	1182	-
Stage 2	-	-	-	-	-	-	526	1184	-	679	1652	-
Follow-up Headway	3.12	-	-	3.12	-	-	3.82	4.02	3.92	3.82	4.02	3.92
Pot Capacity-1 Maneuver	352	-	-	194	-	-	49	17	277	77	17	412
Stage 1	-	-	-	-	-	-	69	154	-	149	262	-
Stage 2	-	-	-	-	-	-	459	261	-	371	154	-
Time blocked-Platoon, %		-	-		-	-						
Mov Capacity-1 Maneuver	352	-	-	194	-	-	39	13	277	55	13	412
Mov Capacity-2 Maneuver	-	-	-	-	-	-	39	13	-	55	13	-
Stage 1	-	-	-	-	-	-	66	147	-	143	201	-
Stage 2	-	-	-	-	-	-	351	200	-	319	147	-

Approach	EB	WB	NB	SB
HCM Control Delay, s	0.1	1.1	19.5	13.8
HCM LOS			C	B

Minor Lane / Major Mvmt	NBLn1	EBL	EBT	EBR	WBL	WBT	WBR	SBLn1
Capacity (veh/h)	277	352	-	-	194	-	-	412
HCM Lane V/C Ratio	0.102	0.043	-	-	0.23	-	-	0.005
HCM Control Delay (s)	19.5	15.689	-	-	29.005	-	-	13.8
HCM Lane LOS	C	C			D			B
HCM 95th %tile Q(veh)	0.337	0.135	-	-	0.855	-	-	0.016

Notes

~ : Volume Exceeds Capacity; $: Delay Exceeds 300 Seconds; Error : Computation Not Defined

Intersection	
Intersection Delay, s/veh	8.1
Intersection LOS	A

Movement	EBL	EBT	EBR	WBL	WBT	WBR	NBL	NBT	NBR	SBL	SBT	SBR
Vol, veh/h	9	14	1	21	4	39	0	70	46	80	77	3
Peak Hour Factor	0.92	0.92	0.92	0.92	0.92	0.92	0.92	0.92	0.92	0.92	0.92	0.92
Heavy Vehicles, %	2	2	2	2	2	2	2	2	2	2	2	2
Mvmt Flow	10	15	1	23	4	42	0	76	50	87	84	3
Number of Lanes	0	1	0	0	1	0	0	1	0	0	1	0

Approach	EB	WB	NB	SB
Opposing Approach	WB	EB	SB	NB
Opposing Lanes	1	1	1	1
Conflicting Approach Left	SB	NB	EB	WB
Conflicting Lanes Left	1	1	1	1
Conflicting Approach Right	NB	SB	WB	EB
Conflicting Lanes Right	1	1	1	1
HCM Control Delay	7.9	7.7	7.8	8.5
HCM LOS	A	A	A	A

Lane	NBLn1	EBLn1	WBLn1	SBLn1
Vol Left, %	0%	38%	33%	50%
Vol Thru, %	60%	58%	6%	48%
Vol Right, %	40%	4%	61%	2%
Sign Control	Stop	Stop	Stop	Stop
Traffic Vol by Lane	116	24	64	160
LT Vol	70	14	4	77
Through Vol	46	1	39	3
RT Vol	0	9	21	80
Lane Flow Rate	126	26	70	174
Geometry Grp	1	1	1	1
Degree of Util (X)	0.144	0.034	0.084	0.207
Departure Headway (Hd)	4.1	4.727	4.326	4.286
Convergence, Y/N	Yes	Yes	Yes	Yes
Cap	879	760	832	824
Service Time	2.108	2.737	2.334	2.38
HCM Lane V/C Ratio	0.143	0.034	0.084	0.211
HCM Control Delay	7.8	7.9	7.7	8.5
HCM Lane LOS	A	A	A	A
HCM 95th-tile Q	0.5	0.1	0.3	0.8

Notes

~ : Volume Exceeds Capacity; $: Delay Exceeds 300 Seconds; Error : Computation Not Defined

HCM 2010 Signalized Intersection Summary
4278: Midway Rd & Lindbergh Dr

7/20/2015

Movement	EBL	EBT	EBR	WBL	WBT	WBR	NBL	NBT	NBR	SBL	SBT	SBR
Lane Configurations												
Volume (veh/h)	57	31	42	53	16	182	27	1919	81	211	1773	35
Number	3	8	18	7	4	14	1	6	16	5	2	12
Initial Q (Qb), veh	0	0	0	0	0	0	0	0	0	0	0	0
Ped-Bike Adj(A_pbT)	1.00		1.00	1.00		1.00	1.00		1.00	1.00		1.00
Parking Bus Adj	1.00	1.00	1.00	1.00	1.00	1.00	1.00	1.00	1.00	1.00	1.00	1.00
Adj Sat Flow veh/h/ln	186.3	186.3	190.0	186.3	193.7	186.3	186.3	186.3	190.0	186.3	186.3	190.0
Lanes	1	1	0	1	1	1	1	3	0	1	3	0
Cap, veh/h	352	115	175	316	332	271	184	3109	141	330	3497	69
Arrive On Green	0.07	0.17	0.16	0.07	0.17	0.17	0.08	1.00	1.00	0.09	0.64	0.63
Sat Flow, veh/h	1774	667	1016	1774	1937	1583	1774	5305	241	1774	5461	108
Grp Volume(v), veh/h	84	0	106	82	21	222	42	1402	688	278	1510	750
Grp Sat Flow(s),veh/h/ln	1774	0	1683	1774	1937	1583	1774	1863	1820	1774	1863	1844
Q Serve(g_s), s	5.6	0.0	8.2	5.4	1.3	19.8	1.3	0.0	0.0	8.6	36.0	36.2
Cycle Q Clear(g_c), s	5.6	0.0	8.2	5.4	1.3	19.8	1.3	0.0	0.0	8.6	36.0	36.2
Prop In Lane	1.00		0.60	1.00		1.00	1.00		0.13	1.00		0.06
Lane Grp Cap(c), veh/h	352	0	290	316	332	271	184	2183	1067	330	2386	1181
V/C Ratio(X)	0.24	0.00	0.37	0.26	0.06	0.82	0.23	0.64	0.64	0.84	0.63	0.64
Avail Cap(c_a), veh/h	378	0	333	367	409	334	247	2183	1067	418	2386	1181
HCM Platoon Ratio	1.00	1.00	1.00	1.00	1.00	1.00	2.00	2.00	2.00	1.00	1.00	1.00
Upstream Filter(I)	1.00	0.00	1.00	1.00	1.00	1.00	1.00	1.00	1.00	1.00	1.00	1.00
Uniform Delay (d), s/veh	44.6	0.0	54.1	45.0	50.9	58.6	13.6	0.0	0.0	22.0	16.0	16.0
Incr Delay (d2), s/veh	0.3	0.0	0.8	0.4	0.1	12.2	0.6	1.5	3.0	11.8	1.3	2.6
Initial Q Delay(d3),s/veh	0.0	0.0	0.0	0.0	0.0	0.0	0.0	0.0	0.0	0.0	0.0	0.0
%ile Back of Q (50%), veh/ln	2.6	0.0	3.7	2.5	0.7	9.1	0.6	0.4	0.9	7.8	15.7	16.3
Lane Grp Delay (d), s/veh	44.9	0.0	54.9	45.4	51.0	70.8	14.2	1.5	3.0	33.8	17.3	18.6
Lane Grp LOS	D		D	D	D	E	B	A	A	C	B	B
Approach Vol, veh/h		190			325			2132			2538	
Approach Delay, s/veh		50.5			63.1			2.2			19.5	
Approach LOS		D			E			A			B	

Timer												
Assigned Phs	3	8		7	4		1	6		5	2	
Phs Duration (G+Y+Rc), s	12.8	28.3		12.7	28.2		8.8	89.0		16.8	97.0	
Change Period (Y+Rc), s	5.5	5.5		5.5	5.5		5.5	5.5		5.5	5.5	
Max Green Setting (Gmax), s	9.5	26.5		11.5	28.5		8.5	81.5		18.5	91.5	
Max Q Clear Time (g_c+I1), s	7.6	10.2		7.4	21.8		3.3	2.0		10.6	38.2	
Green Ext Time (p_c), s	0.0	1.3		0.1	0.8		0.0	60.9		0.6	44.3	

Intersection Summary			
HCM 2010 Ctrl Delay			16.3
HCM 2010 LOS			B

Notes

HCM 2010 Signalized Intersection Summary
4287: Beltway Dr & Beltline Rd

7/20/2015

Movement	EBU	EBT	EBR	WBL	WBT	NBL	NBR
Lane Configurations							
Volume (veh/h)	15	1753	26	84	1827	26	194
Number		6	16	5	2	7	14
Initial Q (Qb), veh		0	0	0	0	0	0
Ped-Bike Adj(A_pbT)			1.00	1.00		1.00	1.00
Parking Bus Adj		1.00	1.00	1.00	1.00	1.00	1.00
Adj Sat Flow veh/h/ln		186.3	190.0	186.3	186.3	186.3	186.3
Lanes		3	0	1	3	1	2
Cap, veh/h		4206	79	165	4720	197	351
Arrive On Green		0.77	0.76	0.05	0.84	0.11	0.11
Sat Flow, veh/h		5467	103	1774	5588	1774	3167
Grp Volume(v), veh/h		1231	610	108	1884	41	228
Grp Sat Flow(s),veh/h/ln		1863	1845	1774	1863	1774	1583
Q Serve(g_s), s		15.4	15.4	2.6	10.7	2.8	9.3
Cycle Q Clear(g_c), s		15.4	15.4	2.6	10.7	2.8	9.3
Prop In Lane			0.06	1.00		1.00	1.00
Lane Grp Cap(c), veh/h		2866	1419	165	4720	197	351
V/C Ratio(X)		0.43	0.43	0.66	0.40	0.21	0.65
Avail Cap(c_a), veh/h		2866	1419	267	4720	420	750
HCM Platoon Ratio		1.00	1.00	1.00	1.00	1.00	1.00
Upstream Filter(I)		1.00	1.00	1.00	1.00	1.00	1.00
Uniform Delay (d), s/veh		5.4	5.4	51.3	2.5	54.7	57.6
Incr Delay (d2), s/veh		0.5	1.0	4.4	0.3	0.5	2.0
Initial Q Delay(d3),s/veh		0.0	0.0	0.0	0.0	0.0	0.0
%ile Back of Q (50%), veh/ln		6.0	6.2	4.0	3.3	1.3	0.1
Lane Grp Delay (d), s/veh		5.8	6.3	55.7	2.7	55.2	59.6
Lane Grp LOS		A	A	E	A	E	E
Approach Vol, veh/h		1841			1992	269	
Approach Delay, s/veh		6.0			5.6	58.9	
Approach LOS		A			A	E	

Timer							
Assigned Phs		6		5	2		
Phs Duration (G+Y+Rc), s		107.0		10.2	117.2		
Change Period (Y+Rc), s		5.5		5.5	5.5		
Max Green Setting (Gmax), s		101.5		12.5	106.5		
Max Q Clear Time (g_c+I1), s		17.4		4.6	12.7		
Green Ext Time (p_c), s		51.7		0.2	55.0		

Intersection Summary			
HCM 2010 Ctrl Delay			9.3
HCM 2010 LOS			A

Notes

HCM 2010 Signalized Intersection Summary
4288: Midway Rd & Beltline Rd

7/20/2015

Movement	EBL	EBT	EBR	WBL	WBT	WBR	NBL	NBT	NBR	SBL	SBT	SBR
Lane Configurations												
Volume (veh/h)	173	1216	282	306	1071	383	259	1471	327	353	1086	154
Number	1	6	16	5	2	12	7	4	14	3	8	18
Initial Q (Qb), veh	0	0	0	0	0	0	0	0	0	0	0	0
Ped-Bike Adj(A_pbT)	1.00		1.00	1.00		1.00	1.00		1.00	1.00		1.00
Parking Bus Adj	1.00	1.00	1.00	1.00	1.00	1.00	1.00	1.00	1.00	1.00	1.00	1.00
Adj Sat Flow veh/h/ln	186.3	186.3	186.3	186.3	186.3	190.0	186.3	186.3	186.3	186.3	186.3	186.3
Lanes	2	3	1	2	3	0	2	3	1	2	3	1
Cap, veh/h	409	1921	544	409	1339	494	581	1921	544	409	1642	465
Arrive On Green	0.16	0.46	0.46	0.12	0.34	0.33	0.34	0.69	0.00	0.24	0.59	0.00
Sat Flow, veh/h	3442	5588	1583	3442	3897	1438	3442	5588	1583	3442	5588	1583
Grp Volume(v), veh/h	293	1280	357	312	1113	481	298	1616	0	376	1278	0
Grp Sat Flow(s),veh/h/ln	1721	1863	1583	1721	1863	1609	1721	1863	1583	1721	1863	1583
Q Serve(g_s), s	12.9	28.6	28.0	14.1	44.7	44.9	11.1	34.3	0.0	17.1	27.8	0.0
Cycle Q Clear(g_c), s	12.9	28.6	28.0	14.1	44.7	44.9	11.1	34.3	0.0	17.1	27.8	0.0
Prop In Lane	1.00		1.00	1.00		0.89	1.00		1.00	1.00		1.00
Lane Grp Cap(c), veh/h	409	1921	544	409	1281	553	581	1921	544	409	1642	465
V/C Ratio(X)	0.72	0.67	0.66	0.76	0.87	0.87	0.51	0.84	0.00	0.92	0.78	0.00
Avail Cap(c_a), veh/h	409	1921	544	409	1281	553	581	1921	544	409	1642	465
HCM Platoon Ratio	1.33	1.33	1.33	1.00	1.00	1.00	2.00	2.00	2.00	2.00	2.00	2.00
Upstream Filter(I)	1.00	1.00	1.00	1.00	1.00	1.00	1.00	1.00	0.00	1.00	1.00	0.00
Uniform Delay (d), s/veh	64.8	36.3	36.1	68.3	49.1	50.0	47.7	21.8	0.0	60.3	29.0	0.0
Incr Delay (d2), s/veh	10.3	1.8	6.1	12.7	8.2	16.9	3.2	4.7	0.0	28.3	3.7	0.0
Initial Q Delay(d3),s/veh	0.0	0.0	0.0	0.0	0.0	0.0	0.0	0.0	0.0	0.0	0.0	0.0
%ile Back of Q (50%), veh/ln	6.2	13.0	11.5	7.0	22.5	21.0	4.6	11.9	0.0	8.5	11.0	0.0
Lane Grp Delay (d), s/veh	75.1	38.1	42.2	81.0	57.3	66.9	51.0	26.4	0.0	88.6	32.8	0.0
Lane Grp LOS	E	D	D	F	E	E	D	C		F	C	
Approach Vol, veh/h		1930			1906			1914			1654	
Approach Delay, s/veh		44.5			63.6			30.2			45.5	
Approach LOS		D			E			C			D	
Timer												
Assigned Phs	1	6		5	2		7	4		3	8	
Phs Duration (G+Y+Rc), s	22.0	58.0		22.0	58.0		30.0	58.0		22.0	50.0	
Change Period (Y+Rc), s	6.0	6.0		6.0	6.0		6.0	6.0		6.0	6.0	
Max Green Setting (Gmax), s	16.0	52.0		16.0	52.0		24.0	52.0		16.0	44.0	
Max Q Clear Time (g_c+I1), s	14.9	30.6		16.1	46.9		13.1	36.3		19.1	29.8	
Green Ext Time (p_c), s	0.9	10.2		0.0	3.3		0.9	7.6		0.0	7.0	
Intersection Summary												
HCM 2010 Ctrl Delay			45.9									
HCM 2010 LOS			D									
Notes												

HCM 2010 Signalized Intersection Summary
4289: Midway Rd & Beltway Dr

7/20/2015

Movement	EBL	EBT	EBR	WBL	WBT	WBR	NBL	NBT	NBR	SBL	SBT	SBR
Lane Configurations												
Volume (veh/h)	32	34	73	61	46	58	94	2025	92	49	1619	60
Number	3	8	18	7	4	14	1	6	16	5	2	12
Initial Q (Qb), veh	0	0	0	0	0	0	0	0	0	0	0	0
Ped-Bike Adj(A_pbT)	1.00		1.00	1.00		1.00	1.00		1.00	1.00		1.00
Parking Bus Adj	1.00	1.00	1.00	1.00	1.00	1.00	1.00	1.00	1.00	1.00	1.00	1.00
Adj Sat Flow veh/h/ln	186.3	193.7	186.3	186.3	193.7	190.0	186.3	186.3	186.3	186.3	193.7	186.3
Lanes	1	1	1	1	1	0	1	3	1	1	3	1
Cap, veh/h	219	208	170	301	96	127	294	3733	1058	228	3862	1052
Arrive On Green	0.06	0.11	0.11	0.08	0.13	0.11	0.05	0.67	0.67	0.10	1.00	1.00
Sat Flow, veh/h	1774	1937	1583	1774	761	999	1774	5588	1583	1774	5812	1583
Grp Volume(v), veh/h	57	49	91	92	0	148	96	2088	121	63	1927	74
Grp Sat Flow(s),veh/h/ln	1774	1937	1583	1774	0	1761	1774	1863	1583	1774	1937	1583
Q Serve(g_s), s	3.4	2.8	6.7	5.3	0.0	9.9	2.0	24.3	3.4	1.3	0.0	0.0
Cycle Q Clear(g_c), s	3.4	2.8	6.7	5.3	0.0	9.9	2.0	24.3	3.4	1.3	0.0	0.0
Prop In Lane	1.00		1.00	1.00		0.57	1.00		1.00	1.00		1.00
Lane Grp Cap(c), veh/h	219	208	170	301	0	223	294	3733	1058	228	3862	1052
V/C Ratio(X)	0.26	0.24	0.53	0.31	0.00	0.66	0.33	0.56	0.11	0.28	0.50	0.07
Avail Cap(c_a), veh/h	304	663	542	351	0	602	432	3733	1058	300	3862	1052
HCM Platoon Ratio	1.00	1.00	1.00	1.00	1.00	1.00	1.00	1.00	1.00	2.00	2.00	2.00
Upstream Filter(I)	1.00	1.00	1.00	1.00	0.00	1.00	1.00	1.00	1.00	1.00	1.00	1.00
Uniform Delay (d), s/veh	44.4	50.2	51.9	40.1	0.0	51.5	5.1	10.8	7.3	8.3	0.0	0.0
Incr Delay (d2), s/veh	0.6	0.6	2.6	0.6	0.0	3.4	0.6	0.6	0.2	0.7	0.5	0.1
Initial Q Delay(d3),s/veh	0.0	0.0	0.0	0.0	0.0	0.0	0.0	0.0	0.0	0.0	0.0	0.0
%ile Back of Q (50%), veh/ln	1.6	1.5	2.8	2.4	0.0	4.8	0.7	10.1	1.2	0.5	0.2	0.0
Lane Grp Delay (d), s/veh	45.0	50.7	54.5	40.6	0.0	54.9	5.7	11.4	7.5	8.9	0.5	0.1
Lane Grp LOS	D	D	D	D		D	A	B	A	A	A	A
Approach Vol, veh/h		197			240			2305			2064	
Approach Delay, s/veh		50.8			49.4			11.0			0.7	
Approach LOS		D			D			B			A	
Timer												
Assigned Phs	3	8		7	4		1	6		5	2	
Phs Duration (G+Y+Rc), s	10.2	16.2		12.5	18.6		9.5	85.0		9.0	84.6	
Change Period (Y+Rc), s	5.5	5.5		5.5	5.5		5.5	5.5		5.5	5.5	
Max Green Setting (Gmax), s	10.5	39.5		10.5	39.5		13.5	79.5		8.5	74.5	
Max Q Clear Time (g_c+I1), s	5.4	8.7		7.3	11.9		4.0	26.3		3.3	2.0	
Green Ext Time (p_c), s	0.0	1.2		0.1	1.2		0.2	44.3		0.1	56.8	
Intersection Summary												
HCM 2010 Ctrl Delay			10.1									
HCM 2010 LOS			B									
Notes												

HCM 2010 Signalized Intersection Summary
4290: Midway Rd & Proton Dr

7/20/2015

Movement	EBL	EBT	EBR	WBL	WBT	WBR	NBL	NBT	NBR	SBL	SBT	SBR
Lane Configurations												
Volume (veh/h)	86	5	72	6	22	92	114	1907	8	41	1644	64
Number	3	8	18	7	4	14	1	6	16	5	2	12
Initial Q (Qb), veh	0	0	0	0	0	0	0	0	0	0	0	0
Ped-Bike Adj(A_pbT)	1.00		1.00	1.00		1.00	1.00		1.00	1.00		1.00
Parking Bus Adj	1.00	1.00	1.00	1.00	1.00	1.00	1.00	1.00	1.00	1.00	1.00	1.00
Adj Sat Flow veh/h/ln	186.3	193.7	190.0	190.0	186.3	186.3	186.3	186.3	190.0	186.3	186.3	190.0
Lanes	1	1	0	0	1	1	1	3	0	1	3	0
Cap, veh/h	305	44	305	52	159	159	258	3779	23	220	3587	144
Arrive On Green	0.09	0.21	0.21	0.10	0.10	0.10	0.05	0.68	0.67	0.06	0.89	0.88
Sat Flow, veh/h	1774	214	1465	196	1580	1583	1774	5549	34	1774	5335	215
Grp Volume(v), veh/h	109	0	102	41	0	100	118	1439	717	55	1433	705
Grp Sat Flow(s),veh/h/ln	1774	0	1679	1775	0	1583	1774	1863	1857	1774	1863	1825
Q Serve(g_s), s	7.1	0.0	6.9	0.0	0.0	8.2	2.5	27.1	27.1	1.2	11.3	11.5
Cycle Q Clear(g_c), s	7.1	0.0	6.9	2.7	0.0	8.2	2.5	27.1	27.1	1.2	11.3	11.5
Prop In Lane	1.00		0.87	0.20		1.00	1.00		0.02	1.00		0.12
Lane Grp Cap(c), veh/h	305	0	349	210	0	159	258	2537	1265	220	2505	1227
V/C Ratio(X)	0.36	0.00	0.29	0.19	0.00	0.63	0.46	0.57	0.57	0.25	0.57	0.57
Avail Cap(c_a), veh/h	351	0	597	419	0	352	360	2537	1265	286	2505	1227
HCM Platoon Ratio	1.00	1.00	1.00	1.00	1.00	1.00	1.00	1.00	1.00	1.33	1.33	1.33
Upstream Filter(I)	1.00	0.00	1.00	1.00	0.00	1.00	1.00	1.00	1.00	1.00	1.00	1.00
Uniform Delay (d), s/veh	46.1	0.0	45.1	55.9	0.0	58.3	6.7	11.2	11.2	9.0	2.9	3.0
Incr Delay (d2), s/veh	0.7	0.0	0.5	0.4	0.0	4.0	1.3	0.9	1.8	0.6	1.0	2.0
Initial Q Delay(d3),s/veh	0.0	0.0	0.0	0.0	0.0	0.0	0.0	0.0	0.0	0.0	0.0	0.0
%ile Back of Q (50%), veh/ln	3.3	0.0	3.0	1.4	0.0	3.6	1.0	11.7	12.0	0.5	3.0	3.3
Lane Grp Delay (d), s/veh	46.8	0.0	45.6	56.3	0.0	62.4	8.0	12.1	13.1	9.6	3.9	5.0
Lane Grp LOS	D		D	E		E	A	B	B	A	A	A
Approach Vol, veh/h		211			141			2274			2193	
Approach Delay, s/veh		46.2			60.6			12.2			4.4	
Approach LOS		D			E			B			A	
Timer												
Assigned Phs	3	8			4		1	6		5	2	
Phs Duration (G+Y+Rc), s	14.5	31.1			16.6		10.2	95.0		9.0	93.8	
Change Period (Y+Rc), s	5.5	5.5			5.5		5.5	5.5		5.5	5.5	
Max Green Setting (Gmax), s	12.5	45.5			27.5		12.5	89.5		8.5	85.5	
Max Q Clear Time (g_c+I1), s	9.1	8.9			10.2		4.5	29.1		3.2	13.5	
Green Ext Time (p_c), s	0.1	1.1			0.9		0.2	48.2		0.0	55.2	
Intersection Summary												
HCM 2010 Ctrl Delay			11.5									
HCM 2010 LOS			B									
Notes												

HCM 2010 Signalized Intersection Summary
4295: Runyon Rd & Beltline Rd

7/20/2015

Movement	EBL	EBT	EBR	WBL	WBT	WBR	NBL	NBT	NBR	SBL	SBT	SBR
Lane Configurations												
Volume (veh/h)	15	1696	28	41	1311	11	74	1	40	17	1	22
Number	1	6	16	5	2	12	7	4	14	3	8	18
Initial Q (Qb), veh	0	0	0	0	0	0	0	0	0	0	0	0
Ped-Bike Adj(A_pbT)	1.00		1.00	1.00		1.00	1.00		1.00	1.00		1.00
Parking Bus Adj	1.00	1.00	1.00	1.00	1.00	1.00	1.00	1.00	1.00	1.00	1.00	1.00
Adj Sat Flow veh/h/ln	186.3	186.3	186.3	186.3	186.3	190.0	186.3	186.3	190.0	186.3	186.3	190.0
Lanes	1	3	1	1	3	0	2	1	0	1	1	0
Cap, veh/h	378	4022	1139	327	4014	43	467	7	142	182	13	102
Arrive On Green	0.08	1.00	1.00	0.10	1.00	1.00	0.06	0.09	0.08	0.04	0.07	0.06
Sat Flow, veh/h	1774	5588	1583	1774	5519	59	3442	72	1522	1774	184	1427
Grp Volume(v), veh/h	34	1785	51	77	1017	506	110	0	89	31	0	35
Grp Sat Flow(s),veh/h/ln	1774	1863	1583	1774	1863	1852	1721	0	1594	1774	0	1611
Q Serve(g_s), s	0.6	0.0	0.0	1.3	0.0	0.0	3.4	0.0	6.7	2.0	0.0	2.6
Cycle Q Clear(g_c), s	0.6	0.0	0.0	1.3	0.0	0.0	3.4	0.0	6.7	2.0	0.0	2.6
Prop In Lane	1.00		1.00	1.00		0.03	1.00		0.96	1.00		0.89
Lane Grp Cap(c), veh/h	378	4022	1139	327	2709	1347	467	0	149	182	0	115
V/C Ratio(X)	0.09	0.44	0.04	0.24	0.38	0.38	0.24	0.00	0.60	0.17	0.00	0.30
Avail Cap(c_a), veh/h	445	4022	1139	381	2709	1347	525	0	459	279	0	489
HCM Platoon Ratio	2.00	2.00	2.00	2.00	2.00	2.00	1.00	1.00	1.00	1.00	1.00	1.00
Upstream Filter(I)	0.86	0.86	0.86	1.00	1.00	1.00	1.00	0.00	1.00	1.00	0.00	1.00
Uniform Delay (d), s/veh	3.5	0.0	0.0	3.1	0.0	0.0	44.7	0.0	55.1	50.2	0.0	55.7
Incr Delay (d2), s/veh	0.1	0.3	0.1	0.4	0.4	0.8	0.3	0.0	3.8	0.4	0.0	1.5
Initial Q Delay(d3),s/veh	0.0	0.0	0.0	0.0	0.0	0.0	0.0	0.0	0.0	0.0	0.0	0.0
%ile Back of Q (50%), veh/ln	0.2	0.1	0.0	0.4	0.2	0.3	1.5	0.0	3.0	0.9	0.0	1.1
Lane Grp Delay (d), s/veh	3.5	0.3	0.1	3.4	0.4	0.8	44.9	0.0	58.9	50.6	0.0	57.2
Lane Grp LOS	A	A	A	A	A	A	D		E	D		E
Approach Vol, veh/h		1870			1600			199			66	
Approach Delay, s/veh		0.4			0.7			51.2			54.1	
Approach LOS		A			A			D			D	
Timer												
Assigned Phs	1	6		5	2		7	4		3	8	
Phs Duration (G+Y+Rc), s	8.3	93.0		9.2	94.0		10.9	14.7		8.1	12.0	
Change Period (Y+Rc), s	5.5	5.5		5.5	5.5		5.5	5.5		5.5	5.5	
Max Green Setting (Gmax), s	7.5	87.5		7.5	87.5		7.5	33.5		9.5	35.5	
Max Q Clear Time (g_c+I1), s	2.6	2.0		3.3	2.0		5.4	8.7		4.0	4.6	
Green Ext Time (p_c), s	0.0	42.5		0.1	42.5		0.1	0.5		0.0	0.5	
Intersection Summary												
HCM 2010 Ctrl Delay			4.1									
HCM 2010 LOS			A									
Notes												

Lane Group	EBL	EBT	EBR	WBL	WBT	WBR	NBL	NBT	NBR	SBL	SBT	SBR
Lane Configurations												
Volume (vph)	109	1436	50	53	1329	43	76	122	96	64	127	152
Ideal Flow (vphpl)	1900	1900	1900	1900	1900	1900	1900	1900	1900	1900	1900	1900
Storage Length (ft)	150		0	200		0	100		140	100		120
Storage Lanes	1		0	1		0	1		1	1		0
Taper Length (ft)	25			25			25			25		
Lane Util. Factor	1.00	0.91	0.91	1.00	0.91	0.91	1.00	1.00	1.00	1.00	1.00	1.00
Frt		0.993			0.995				0.850			0.850
Flt Protected	0.950			0.950			0.950			0.950		
Satd. Flow (prot)	1770	5050	0	1770	5060	0	1770	1863	1583	1770	1863	1583
Flt Permitted	0.093			0.122			0.301			0.510		
Satd. Flow (perm)	173	5050	0	227	5060	0	561	1863	1583	950	1863	1583
Right Turn on Red			Yes			Yes			Yes			Yes
Satd. Flow (RTOR)		7			5				170			224
Link Speed (mph)		40			40			30			30	
Link Distance (ft)		907			950			997			322	
Travel Time (s)		15.5			16.2			22.7			7.3	
Peak Hour Factor	0.59	0.94	0.68	0.90	0.89	0.86	0.89	0.94	0.90	0.73	0.91	0.68
Adj. Flow (vph)	185	1528	74	59	1493	50	85	130	107	88	140	224
Shared Lane Traffic (%)												
Lane Group Flow (vph)	185	1602	0	59	1543	0	85	130	107	88	140	224
Enter Blocked Intersection	No	No	No	No	No	No	No	No	No	No	No	No
Lane Alignment	Left	Left	Right	Left	Left	Right	Left	Left	Right	Left	Left	Right
Median Width(ft)		12			12			12			12	
Link Offset(ft)		0			0			0			0	
Crosswalk Width(ft)		16			16			16			16	
Two way Left Turn Lane												
Headway Factor	1.00	1.00	1.00	1.00	1.00	1.00	1.00	1.00	1.00	1.00	1.00	1.00
Turning Speed (mph)	15		9	15		9	15		9	15		9
Number of Detectors	1	1		1	1		1	1	1	1	1	1
Detector Template												
Leading Detector (ft)	50	50		50	50		50	50	50	50	50	50
Trailing Detector (ft)	0	0		0	0		0	0	0	0	0	0
Detector 1 Position(ft)	0	0		0	0		0	0	0	0	0	0
Detector 1 Size(ft)	50	50		50	50		50	50	50	50	50	50
Detector 1 Type	Cl+Ex	Cl+Ex		Cl+Ex	Cl+Ex		Cl+Ex	Cl+Ex	Cl+Ex	Cl+Ex	Cl+Ex	Cl+Ex
Detector 1 Channel												
Detector 1 Extend (s)	0.0	0.0		0.0	0.0		0.0	0.0	0.0	0.0	0.0	0.0
Detector 1 Queue (s)	0.0	0.0		0.0	0.0		0.0	0.0	0.0	0.0	0.0	0.0
Detector 1 Delay (s)	0.0	0.0		0.0	0.0		0.0	0.0	0.0	0.0	0.0	0.0
Turn Type	pm+pt	NA		pm+pt	NA		custom	NA	Perm	pm+pt	NA	custom
Protected Phases	1	6 14		13	2 10		15	4 12		11	8 16	
Permitted Phases	6 14			2 10			4		4 12	8 16		8
Detector Phase	1	6 14		13	2 10		15	4 12	4 12	11	8 16	8
Switch Phase												
Minimum Initial (s)	4.0			4.0			4.0			4.0		4.0
Minimum Split (s)	13.0			13.0			13.0			13.0		16.0
Total Split (s)	16.0			16.0			13.0			13.0		20.0
Total Split (%)	10.0%			10.0%			8.1%			8.1%		12.5%

Lane Group	ø2	ø4	ø6	ø10	ø12	ø14	ø16
Lane Configurations							
Volume (vph)							
Ideal Flow (vphpl)							
Storage Length (ft)							
Storage Lanes							
Taper Length (ft)							
Lane Util. Factor							
Frt							
Flt Protected							
Satd. Flow (prot)							
Flt Permitted							
Satd. Flow (perm)							
Right Turn on Red							
Satd. Flow (RTOR)							
Link Speed (mph)							
Link Distance (ft)							
Travel Time (s)							
Peak Hour Factor							
Adj. Flow (vph)							
Shared Lane Traffic (%)							
Lane Group Flow (vph)							
Enter Blocked Intersection							
Lane Alignment							
Median Width(ft)							
Link Offset(ft)							
Crosswalk Width(ft)							
Two way Left Turn Lane							
Headway Factor							
Turning Speed (mph)							
Number of Detectors							
Detector Template							
Leading Detector (ft)							
Trailing Detector (ft)							
Detector 1 Position(ft)							
Detector 1 Size(ft)							
Detector 1 Type							
Detector 1 Channel							
Detector 1 Extend (s)							
Detector 1 Queue (s)							
Detector 1 Delay (s)							
Turn Type							
Protected Phases	2	4	6	10	12	14	16
Permitted Phases							
Detector Phase							
Switch Phase							
Minimum Initial (s)	4.0	4.0	4.0	4.0	4.0	4.0	4.0
Minimum Split (s)	29.5	16.0	24.5	22.0	22.0	22.0	22.0
Total Split (s)	35.0	20.0	51.0	56.0	20.0	40.0	20.0
Total Split (%)	22%	13%	32%	35%	13%	25%	13%

Lane Group	EBL	EBT	EBR	WBL	WBT	WBR	NBL	NBT	NBR	SBL	SBT	SBR
Maximum Green (s)	10.5			10.5			7.5			7.5		14.5
Yellow Time (s)	3.5			3.5			3.5			3.5		3.5
All-Red Time (s)	2.0			2.0			2.0			2.0		2.0
Lost Time Adjust (s)	-2.5			-2.5			-3.0			-2.5		-2.5
Total Lost Time (s)	3.0			3.0			2.5			3.0		3.0
Lead/Lag	Lead			Lead			Lead			Lead		
Lead-Lag Optimize?	Yes			Yes			Yes			Yes		
Vehicle Extension (s)	3.0			3.0			3.0			3.0		3.0
Recall Mode	None			None			None			None		None
Walk Time (s)												5.0
Flash Dont Walk (s)												2.0
Pedestrian Calls (#/hr)												0
Act Effct Green (s)	95.5	95.5		89.3	89.3		23.6	30.0	30.0	39.8	30.0	12.8
Actuated g/C Ratio	0.60	0.60		0.56	0.56		0.15	0.19	0.19	0.25	0.19	0.08
v/c Ratio	0.80	0.53		0.28	0.55		0.53	0.37	0.25	0.31	0.40	0.67
Control Delay	54.4	10.8		13.6	10.8		49.9	32.2	1.4	25.9	32.7	18.3
Queue Delay	0.0	0.0		0.0	0.0		0.0	0.0	0.0	0.0	0.0	0.0
Total Delay	54.4	10.8		13.6	10.8		49.9	32.2	1.4	25.9	32.7	18.3
LOS	D	B		B	B		D	C	A	C	C	B
Approach Delay		15.3			10.9			26.6			24.3	
Approach LOS		B			B			C			C	

Intersection Summary	
Area Type:	Other
Cycle Length: 160	
Actuated Cycle Length: 160	
Offset: 117 (73%), Referenced to phase 2:WBTL and 6:EBTL, Start of 1st Green	
Natural Cycle: 130	
Control Type: Actuated-Coordinated	
Maximum v/c Ratio: 0.80	
Intersection Signal Delay: 15.5	Intersection LOS: B
Intersection Capacity Utilization 56.9%	ICU Level of Service B
Analysis Period (min) 15	

Splits and Phases: 4296: Surveyor Blvd & Beltline Rd

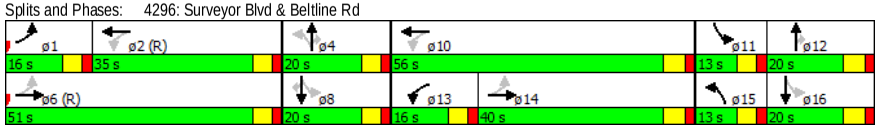

Lane Group	ø2	ø4	ø6	ø10	ø12	ø14	ø16
Maximum Green (s)	29.5	14.5	45.5	50.0	14.0	34.0	14.0
Yellow Time (s)	3.5	3.5	3.5	4.0	4.0	4.0	4.0
All-Red Time (s)	2.0	2.0	2.0	2.0	2.0	2.0	2.0
Lost Time Adjust (s)							
Total Lost Time (s)							
Lead/Lag	Lag				Lag	Lag	Lag
Lead-Lag Optimize?	Yes						
Vehicle Extension (s)	3.0	3.0	3.0	3.0	3.0	3.0	3.0
Recall Mode	C-Max	Min	C-Max	Max	Min	None	Max
Walk Time (s)	5.0	5.0	5.0	5.0	5.0	5.0	5.0
Flash Dont Walk (s)	19.0	24.0	14.0	11.0	11.0	11.0	11.0
Pedestrian Calls (#/hr)	0	0	0	0	0	0	0
Act Effct Green (s)							
Actuated g/C Ratio							
v/c Ratio							
Control Delay							
Queue Delay							
Total Delay							
LOS							
Approach Delay							
Approach LOS							

Intersection Summary

Intersection	
Intersection Delay, s/veh	0.6

Movement	EBT	EBR	WBL	WBT	NBL	NBR
Vol, veh/h	1689	28	0	0	0	44
Conflicting Peds, #/hr	0	0	0	0	0	0
Sign Control	Free	Free	Free	Free	Stop	Stop
RT Channelized	-	None	-	None	-	None
Storage Length	-	140	-	-	-	0
Veh in Median Storage, #	0	-	-	0	0	-
Grade, %	0	-	-	0	0	-
Peak Hour Factor	92	92	92	92	92	92
Heavy Vehicles, %	2	2	2	2	2	2
Mvmt Flow	1836	30	0	0	0	48

Major/Minor	Major1		Major2		Minor1	
Conflicting Flow All	0	0	1836	0	1836	918
Stage 1	-	-	-	-	1836	-
Stage 2	-	-	-	-	0	-
Follow-up Headway	-	-	3.12	-	3.82	3.92
Pot Capacity-1 Maneuver	-	-	151	-	115	235
Stage 1	-	-	-	-	72	-
Stage 2	-	-	-	-	-	-
Time blocked-Platoon, %	-	-		-		
Mov Capacity-1 Maneuver	-	-	151	-	115	235
Mov Capacity-2 Maneuver	-	-	-	-	115	-
Stage 1	-	-	-	-	72	-
Stage 2	-	-	-	-	-	-

Approach	EB	WB	NB
HCM Control Delay, s	0	0	24.2
HCM LOS			C

Minor Lane / Major Mvmt	NBLn1	EBT	EBR	WBL	WBT
Capacity (veh/h)	235	-	-	151	-
HCM Lane V/C Ratio	0.204	-	-	-	-
HCM Control Delay (s)	24.2	-	-	0	-
HCM Lane LOS	C			A	
HCM 95th %tile Q(veh)	0.743	-	-	0	-

Notes

~ : Volume Exceeds Capacity; $: Delay Exceeds 300 Seconds; Error : Computation Not Defined

Intersection	
Intersection Delay, s/veh	0.3

Movement	EBL	EBR	NBL	NBT	SBT	SBR
Vol, veh/h	1	14	23	2077	1761	7
Conflicting Peds, #/hr	0	0	0	0	0	0
Sign Control	Stop	Stop	Free	Free	Free	Free
RT Channelized	-	None	-	None	-	None
Storage Length	0	-	125	-	-	-
Veh in Median Storage, #	0	-	-	0	0	-
Grade, %	0	-	-	0	0	-
Peak Hour Factor	92	92	92	92	92	92
Heavy Vehicles, %	2	2	2	2	2	2
Mvmt Flow	1	15	25	2258	1914	8

Major/Minor	Minor2		Major1		Major2	
Conflicting Flow All	2899	961	1922	0	-	0
Stage 1	1946	-	-	-	-	-
Stage 2	953	-	-	-	-	-
Follow-up Headway	3.82	3.92	3.12	-	-	-
Pot Capacity-1 Maneuver	30	220	137	-	-	-
Stage 1	62	-	-	-	-	-
Stage 2	303	-	-	-	-	-
Time blocked-Platoon, %				-	-	-
Mov Capacity-1 Maneuver	25	220	137	-	-	-
Mov Capacity-2 Maneuver	25	-	-	-	-	-
Stage 1	62	-	-	-	-	-
Stage 2	248	-	-	-	-	-

Approach	EB	NB	SB
HCM Control Delay, s	32.9	0.4	0
HCM LOS	D		

Minor Lane / Major Mvmt	NBL	NBT	EBLn1	SBU	SBT	SBR
Capacity (veh/h)	137	-	145	-	-	-
HCM Lane V/C Ratio	0.182	-	0.112	-	-	-
HCM Control Delay (s)	37.052	-	32.9	-	-	-
HCM Lane LOS	E		D			
HCM 95th %tile Q(veh)	0.64	-	0.371	-	-	-

Notes

~ : Volume Exceeds Capacity; $: Delay Exceeds 300 Seconds; Error : Computation Not Defined

Intersection	
Intersection Delay, s/veh	20.5

Movement	EBL	EBT	EBR	WBL	WBT	WBR	NBL	NBT	NBR	SBL	SBT	SBR
Vol, veh/h	1	0	4	12	0	100	17	2352	28	29	1684	8
Conflicting Peds, #/hr	0	0	0	0	0	0	0	0	0	0	0	0
Sign Control	Stop	Stop	Stop	Stop	Stop	Stop	Free	Free	Free	Free	Free	Free
RT Channelized	-	-	None	-	-	None	-	-	None	-	-	None
Storage Length	-	-	-	-	-	0	130	-	-	125	-	-
Veh in Median Storage, #	-	0	-	-	0	-	-	0	-	-	0	-
Grade, %	-	0	-	-	0	-	-	0	-	-	0	-
Peak Hour Factor	92	92	92	92	92	92	92	92	92	92	92	92
Heavy Vehicles, %	2	2	2	2	2	2	2	2	2	2	2	2
Mvmt Flow	1	0	4	13	0	109	18	2557	30	32	1830	9

Major/Minor	Minor2			Minor1			Major1			Major2		
Conflicting Flow All	2958	4522	920	3404	4511	1293	1839	0	0	2587	0	0
Stage 1	1898	1898	-	2609	2609	-	-	-	-	-	-	-
Stage 2	1060	2624	-	795	1902	-	-	-	-	-	-	-
Follow-up Headway	3.82	4.02	3.92	3.82	4.02	3.92	3.12	-	-	3.12	-	-
Pot Capacity-1 Maneuver	16	1	234	# 8	1	132	151	-	-	62	-	-
Stage 1	46	116	-	14	50	-	-	-	-	-	-	-
Stage 2	216	49	-	315	116	-	-	-	-	-	-	-
Time blocked-Platoon, %								-	-		-	-
Mov Capacity-1 Maneuver	2	0	234	# 4	0	132	151	-	-	62	-	-
Mov Capacity-2 Maneuver	2	0	-	# 4	0	-	-	-	-	-	-	-
Stage 1	41	56	-	# 12	44	-	-	-	-	-	-	-
Stage 2	34	43	-	150	56	-	-	-	-	-	-	-

Approach	EB	WB	NB	SB
HCM Control Delay, s	$ 576.3	$ 717.6	0.2	1.9
HCM LOS	F	F		

Minor Lane / Major Mvmt	NBL	NBT	NBR	EBLn1	WBLn1	WBLn2	SBL	SBT	SBR
Capacity (veh/h)	151	-	-	10	14	132	62	-	-
HCM Lane V/C Ratio	0.122	-	-	0.543	3.52	0.549	0.508	-	-
HCM Control Delay (s)	32.138	-	-	$ 576.3	$ 1682.7	61.3	112.202	-	-
HCM Lane LOS	D			F	F	F	F		
HCM 95th %tile Q(veh)	0.408	-	-	1.171	7.036	2.684	2.026	-	-

Notes

~ : Volume Exceeds Capacity; $: Delay Exceeds 300 Seconds; Error : Computation Not Defined

Two Way Analysis cannot be performed on an All Way Stop Intersection.

Intersection	
Intersection Delay, s/veh	8.4

Movement	EBL	EBT	EBR	WBL	WBT	WBR	NBL	NBT	NBR	SBL	SBT	SBR
Vol, veh/h	28	1591	77	166	1354	6	0	0	126	0	0	16
Conflicting Peds, #/hr	0	0	0	0	0	0	0	0	0	0	0	0
Sign Control	Free	Free	Free	Free	Free	Free	Stop	Stop	Stop	Stop	Stop	Stop
RT Channelized	-	-	None	-	-	None	-	-	None	-	-	None
Storage Length	160	-	160	175	-	-	-	-	0	-	-	0
Veh in Median Storage, #	-	0	-	-	0	-	-	0	-	-	0	-
Grade, %	-	0	-	-	0	-	-	0	-	-	0	-
Peak Hour Factor	92	92	92	92	92	92	92	92	92	92	92	92
Heavy Vehicles, %	2	2	2	2	2	2	2	2	2	2	2	2
Mvmt Flow	30	1729	84	180	1472	7	0	0	137	0	0	17

Major/Minor	Major1			Major2			Minor1			Minor2		
Conflicting Flow All	1478	0	0	1729	0	0	2740	3629	865	2589	3626	739
Stage 1	-	-	-	-	-	-	1790	1790	-	1836	1836	-
Stage 2	-	-	-	-	-	-	950	1839	-	753	1790	-
Follow-up Headway	3.12	-	-	3.12	-	-	3.82	4.02	3.92	3.82	4.02	3.92
Pot Capacity-1 Maneuver	228	-	-	# 171	-	-	22	5	255	27	5	309
Stage 1	-	-	-	-	-	-	55	132	-	51	125	-
Stage 2	-	-	-	-	-	-	253	124	-	334	132	-
Time blocked-Platoon, %		-	-		-	-						
Mov Capacity-1 Maneuver	228	-	-	# 171	-	-	19	4	255	11	4	309
Mov Capacity-2 Maneuver	-	-	-	-	-	-	19	4	-	11	4	-
Stage 1	-	-	-	-	-	-	48	115	-	44	125	-
Stage 2	-	-	-	-	-	-	239	124	-	134	115	-

Approach	EB	WB	NB	SB
HCM Control Delay, s	0.4	15.1	34.4	17.3
HCM LOS			D	C

Minor Lane / Major Mvmt	NBLn1	EBL	EBT	EBR	WBL	WBT	WBR	SBLn1
Capacity (veh/h)	255	228	-	-	# 171	-	-	309
HCM Lane V/C Ratio	0.537	0.133	-	-	1.055	-	-	0.056
HCM Control Delay (s)	34.4	23.207	-	-	139.217	-	-	17.3
HCM Lane LOS	D	C			F			C
HCM 95th %tile Q(veh)	2.908	0.454	-	-	8.837	-	-	0.178

Notes

~ : Volume Exceeds Capacity; $: Delay Exceeds 300 Seconds; Error : Computation Not Defined

Intersection	
Intersection Delay, s/veh	9.8
Intersection LOS	A

Movement	EBL	EBT	EBR	WBL	WBT	WBR	NBL	NBT	NBR	SBL	SBT	SBR
Vol, veh/h	8	7	3	46	14	176	2	113	75	93	109	11
Peak Hour Factor	0.92	0.92	0.92	0.92	0.92	0.92	0.92	0.92	0.92	0.92	0.92	0.92
Heavy Vehicles, %	2	2	2	2	2	2	2	2	2	2	2	2
Mvmt Flow	9	8	3	50	15	191	2	123	82	101	118	12
Number of Lanes	0	1	0	0	1	0	0	1	0	0	1	0

Approach	EB	WB	NB	SB
Opposing Approach	WB	EB	SB	NB
Opposing Lanes	1	1	1	1
Conflicting Approach Left	SB	NB	EB	WB
Conflicting Lanes Left	1	1	1	1
Conflicting Approach Right	NB	SB	WB	EB
Conflicting Lanes Right	1	1	1	1
HCM Control Delay	8.5	9.9	9.4	10.2
HCM LOS	A	A	A	B

Lane	NBLn1	EBLn1	WBLn1	SBLn1
Vol Left, %	1%	44%	19%	44%
Vol Thru, %	59%	39%	6%	51%
Vol Right, %	39%	17%	75%	5%
Sign Control	Stop	Stop	Stop	Stop
Traffic Vol by Lane	190	18	236	213
LT Vol	113	7	14	109
Through Vol	75	3	176	11
RT Vol	2	8	46	93
Lane Flow Rate	207	20	257	232
Geometry Grp	1	1	1	1
Degree of Util (X)	0.266	0.029	0.326	0.314
Departure Headway (Hd)	4.637	5.298	4.579	4.883
Convergence, Y/N	Yes	Yes	Yes	Yes
Cap	768	669	780	732
Service Time	2.7	3.382	2.635	2.946
HCM Lane V/C Ratio	0.27	0.03	0.329	0.317
HCM Control Delay	9.4	8.5	9.9	10.2
HCM Lane LOS	A	A	A	B
HCM 95th-tile Q	1.1	0.1	1.4	1.3

Notes

~ : Volume Exceeds Capacity; $: Delay Exceeds 300 Seconds; Error : Computation Not Defined

Synchro^{TM} Output – 2017 Background Traffic

HCM 2010 Signalized Intersection Summary
4278: Midway Rd & Lindbergh Dr

7/20/2015

Movement	EBL	EBT	EBR	WBL	WBT	WBR	NBL	NBT	NBR	SBL	SBT	SBR
Lane Configurations												
Volume (veh/h)	18	10	7	19	18	163	41	1092	50	217	2442	59
Number	3	8	18	7	4	14	1	6	16	5	2	12
Initial Q (Qb), veh	0	0	0	0	0	0	0	0	0	0	0	0
Ped-Bike Adj(A_pbT)	1.00		1.00	1.00		1.00	1.00		1.00	1.00		1.00
Parking Bus Adj	1.00	1.00	1.00	1.00	1.00	1.00	1.00	1.00	1.00	1.00	1.00	1.00
Adj Sat Flow veh/h/ln	186.3	186.3	190.0	186.3	193.7	186.3	186.3	186.3	190.0	186.3	186.3	190.0
Lanes	1	1	0	1	1	1	1	3	0	1	3	0
Cap, veh/h	289	153	120	320	308	252	149	3348	165	496	3652	88
Arrive On Green	0.04	0.16	0.15	0.04	0.16	0.16	0.09	1.00	1.00	0.08	0.67	0.66
Sat Flow, veh/h	1774	968	761	1774	1937	1583	1774	5283	260	1774	5435	131
Grp Volume(v), veh/h	26	0	25	29	24	199	63	802	392	286	2084	1042
Grp Sat Flow(s),veh/h/ln	1774	0	1729	1774	1937	1583	1774	1863	1817	1774	1863	1840
Q Serve(g_s), s	1.6	0.0	1.7	1.8	1.4	16.6	1.6	0.0	0.0	6.1	57.0	58.7
Cycle Q Clear(g_c), s	1.6	0.0	1.7	1.8	1.4	16.6	1.6	0.0	0.0	6.1	57.0	58.7
Prop In Lane	1.00		0.44	1.00		1.00	1.00		0.14	1.00		0.07
Lane Grp Cap(c), veh/h	289	0	273	320	308	252	149	2361	1151	496	2503	1236
V/C Ratio(X)	0.09	0.00	0.09	0.09	0.08	0.79	0.42	0.34	0.34	0.58	0.83	0.84
Avail Cap(c_a), veh/h	353	0	391	383	439	359	264	2361	1151	634	2503	1236
HCM Platoon Ratio	1.00	1.00	1.00	1.00	1.00	1.00	2.00	2.00	2.00	1.00	1.00	1.00
Upstream Filter(I)	1.00	0.00	1.00	1.00	1.00	1.00	1.00	1.00	1.00	1.00	1.00	1.00
Uniform Delay (d), s/veh	45.1	0.0	49.6	44.9	49.0	55.4	28.7	0.0	0.0	4.8	16.7	17.0
Incr Delay (d2), s/veh	0.1	0.0	0.1	0.1	0.1	7.6	1.9	0.4	0.8	1.1	3.4	7.1
Initial Q Delay(d3),s/veh	0.0	0.0	0.0	0.0	0.0	0.0	0.0	0.0	0.0	0.0	0.0	0.0
%ile Back of Q (50%), veh/ln	0.8	0.0	0.8	0.8	0.7	7.3	2.1	0.1	0.3	2.2	24.6	26.5
Lane Grp Delay (d), s/veh	45.2	0.0	49.7	45.0	49.1	62.9	30.6	0.4	0.8	5.9	20.1	24.1
Lane Grp LOS	D		D	D	D	E	C	A	A	A	C	C
Approach Vol, veh/h		51			252			1257			3412	
Approach Delay, s/veh		47.4			59.6			2.0			20.2	
Approach LOS		D			E			A			C	

Timer												
Assigned Phs	3	8		7	4		1	6		5	2	
Phs Duration (G+Y+Rc), s	8.0	24.6		8.2	24.8		9.1	89.8		14.4	95.0	
Change Period (Y+Rc), s	5.5	5.5		5.5	5.5		5.5	5.5		5.5	5.5	
Max Green Setting (Gmax), s	7.5	28.5		7.5	28.5		12.5	82.5		19.5	89.5	
Max Q Clear Time (g_c+I1), s	3.6	3.7		3.8	18.6		3.6	2.0		8.1	60.7	
Green Ext Time (p_c), s	0.0	1.0		0.0	0.7		0.1	64.4		0.8	26.4	

Intersection Summary												
HCM 2010 Ctrl Delay			17.9									
HCM 2010 LOS			B									

Notes

HCM 2010 Signalized Intersection Summary
4287: Beltway Dr & Beltline Rd

7/20/2015

Movement	EBU	EBT	EBR	WBL	WBT	NBL	NBR
Lane Configurations							
Volume (veh/h)	2	1741	19	108	1534	8	73
Number		6	16	5	2	7	14
Initial Q (Qb), veh		0	0	0	0	0	0
Ped-Bike Adj(A_pbT)			1.00	1.00		1.00	1.00
Parking Bus Adj		1.00	1.00	1.00	1.00	1.00	1.00
Adj Sat Flow veh/h/ln		186.3	190.0	186.3	186.3	186.3	186.3
Lanes		3	0	1	3	1	2
Cap, veh/h		4401	61	197	4980	111	198
Arrive On Green		0.80	0.79	0.07	0.89	0.06	0.06
Sat Flow, veh/h		5498	77	1774	5588	1774	3167
Grp Volume(v), veh/h		1216	604	138	1581	13	86
Grp Sat Flow(s),veh/h/ln		1863	1849	1774	1863	1774	1583
Q Serve(g_s), s		12.6	12.6	4.1	5.6	0.9	3.4
Cycle Q Clear(g_c), s		12.6	12.6	4.1	5.6	0.9	3.4
Prop In Lane			0.04	1.00		1.00	1.00
Lane Grp Cap(c), veh/h		2982	1480	197	4980	111	198
V/C Ratio(X)		0.41	0.41	0.70	0.32	0.12	0.43
Avail Cap(c_a), veh/h		2982	1480	281	4980	437	780
HCM Platoon Ratio		1.00	1.00	1.00	1.00	1.00	1.00
Upstream Filter(I)		1.00	1.00	1.00	1.00	1.00	1.00
Uniform Delay (d), s/veh		3.8	3.9	53.4	1.1	57.5	58.7
Incr Delay (d2), s/veh		0.4	0.8	4.5	0.2	0.5	1.5
Initial Q Delay(d3),s/veh		0.0	0.0	0.0	0.0	0.0	0.0
%ile Back of Q (50%), veh/ln		4.4	4.5	4.8	1.2	0.4	0.0
Lane Grp Delay (d), s/veh		4.3	4.7	57.9	1.2	58.0	60.2
Lane Grp LOS		A	A	E	A	E	E
Approach Vol, veh/h		1820			1719	99	
Approach Delay, s/veh		4.4			5.8	59.9	
Approach LOS		A			A	E	

Timer							
Assigned Phs		6		5	2		
Phs Duration (G+Y+Rc), s		107.0		11.8	118.8		
Change Period (Y+Rc), s		5.5		5.5	5.5		
Max Green Setting (Gmax), s		101.5		12.5	106.5		
Max Q Clear Time (g_c+I1), s		14.6		6.1	7.6		
Green Ext Time (p_c), s		43.8		0.2	46.1		

Intersection Summary							
HCM 2010 Ctrl Delay			6.6				
HCM 2010 LOS			A				

Notes

HCM 2010 Signalized Intersection Summary
4288: Midway Rd & Beltline Rd

7/20/2015

Movement	EBL	EBT	EBR	WBL	WBT	WBR	NBL	NBT	NBR	SBL	SBT	SBR
Lane Configurations												
Volume (veh/h)	135	996	275	311	825	340	132	627	239	493	1758	143
Number	1	6	16	5	2	12	7	4	14	3	8	18
Initial Q (Qb), veh	0	0	0	0	0	0	0	0	0	0	0	0
Ped-Bike Adj(A_pbT)	1.00		1.00	1.00		1.00	1.00		1.00	1.00		1.00
Parking Bus Adj	1.00	1.00	1.00	1.00	1.00	1.00	1.00	1.00	1.00	1.00	1.00	1.00
Adj Sat Flow veh/h/ln	186.3	186.3	186.3	186.3	186.3	190.0	186.3	186.3	186.3	186.3	186.3	186.3
Lanes	2	3	1	2	3	0	2	3	1	2	3	1
Cap, veh/h	258	1502	426	559	1327	564	258	1886	534	538	2340	663
Arrive On Green	0.15	0.54	0.54	0.16	0.36	0.34	0.15	0.68	0.00	0.31	0.84	0.00
Sat Flow, veh/h	3442	5588	1583	3442	3726	1583	3442	5588	1583	3442	5588	1583
Grp Volume(v), veh/h	229	1048	348	317	897	382	152	689	0	524	2068	0
Grp Sat Flow(s),veh/h/ln	1721	1863	1583	1721	1863	1583	1721	1863	1583	1721	1863	1583
Q Serve(g_s), s	10.4	22.2	29.0	13.6	32.7	33.0	6.6	8.5	0.0	24.1	37.0	0.0
Cycle Q Clear(g_c), s	10.4	22.2	29.0	13.6	32.7	33.0	6.6	8.5	0.0	24.1	37.0	0.0
Prop In Lane	1.00		1.00	1.00		1.00	1.00		1.00	1.00		1.00
Lane Grp Cap(c), veh/h	258	1502	426	559	1327	564	258	1886	534	538	2340	663
V/C Ratio(X)	0.89	0.70	0.82	0.57	0.68	0.68	0.59	0.37	0.00	0.97	0.88	0.00
Avail Cap(c_a), veh/h	258	1502	426	559	1327	564	258	1886	534	538	2340	663
HCM Platoon Ratio	2.00	2.00	2.00	1.00	1.00	1.00	2.00	2.00	2.00	2.00	2.00	2.00
Upstream Filter(I)	1.00	1.00	1.00	1.00	1.00	1.00	1.00	1.00	0.00	1.00	1.00	0.00
Uniform Delay (d), s/veh	67.3	32.2	33.8	61.8	43.7	44.6	65.7	18.6	0.0	54.7	10.6	0.0
Incr Delay (d2), s/veh	33.2	2.7	15.9	4.1	2.8	6.4	9.5	0.5	0.0	33.0	5.3	0.0
Initial Q Delay(d3),s/veh	0.0	0.0	0.0	0.0	0.0	0.0	0.0	0.0	0.0	0.0	0.0	0.0
%ile Back of Q (50%), veh/ln	5.5	8.9	11.4	6.4	15.8	14.3	3.1	3.3	0.0	12.1	6.9	0.0
Lane Grp Delay (d), s/veh	100.5	34.9	49.7	65.9	46.4	51.0	75.2	19.2	0.0	87.7	15.9	0.0
Lane Grp LOS	F	C	D	E	D	D	E	B		F	B	
Approach Vol, veh/h		1625			1596			841			2592	
Approach Delay, s/veh		47.3			51.4			29.3			30.4	
Approach LOS		D			D			C			C	

Timer												
Assigned Phs	1	6		5	2		7	4		3	8	
Phs Duration (G+Y+Rc), s	15.0	46.0		29.0	60.0		15.0	57.0		28.0	70.0	
Change Period (Y+Rc), s	6.0	6.0		6.0	6.0		6.0	6.0		6.0	6.0	
Max Green Setting (Gmax), s	9.0	40.0		23.0	54.0		9.0	51.0		22.0	64.0	
Max Q Clear Time (g_c+I1), s	12.4	31.0		15.6	35.0		8.6	10.5		26.1	39.0	
Green Ext Time (p_c), s	0.0	5.1		0.8	6.1		0.0	3.4		0.0	16.3	

Intersection Summary												
HCM 2010 Ctrl Delay			39.4									
HCM 2010 LOS			D									

Notes

HCM 2010 Signalized Intersection Summary
4289: Midway Rd & Beltway Dr

7/20/2015

Movement	EBL	EBT	EBR	WBL	WBT	WBR	NBL	NBT	NBR	SBL	SBT	SBR
Lane Configurations												
Volume (veh/h)	33	38	86	34	9	49	44	939	30	43	2211	33
Number	3	8	18	7	4	14	1	6	16	5	2	12
Initial Q (Qb), veh	0	0	0	0	0	0	0	0	0	0	0	0
Ped-Bike Adj(A_pbT)	1.00		1.00	1.00		1.00	1.00		1.00	1.00		1.00
Parking Bus Adj	1.00	1.00	1.00	1.00	1.00	1.00	1.00	1.00	1.00	1.00	1.00	1.00
Adj Sat Flow veh/h/ln	186.3	193.7	186.3	186.3	193.7	190.0	186.3	186.3	186.3	186.3	193.7	186.3
Lanes	1	1	1	1	1	0	1	3	1	1	3	1
Cap, veh/h	242	214	175	260	26	153	216	3844	1089	528	4010	1092
Arrive On Green	0.06	0.11	0.11	0.06	0.11	0.09	0.09	1.00	1.00	0.10	1.00	1.00
Sat Flow, veh/h	1774	1937	1583	1774	243	1440	1774	5588	1583	1774	5812	1583
Grp Volume(v), veh/h	59	55	108	52	0	83	45	968	39	55	2632	41
Grp Sat Flow(s),veh/h/ln	1774	1937	1583	1774	0	1683	1774	1863	1583	1774	1937	1583
Q Serve(g_s), s	3.5	3.2	8.0	3.1	0.0	5.7	0.8	0.0	0.0	1.0	0.0	0.0
Cycle Q Clear(g_c), s	3.5	3.2	8.0	3.1	0.0	5.7	0.8	0.0	0.0	1.0	0.0	0.0
Prop In Lane	1.00		1.00	1.00		0.86	1.00		1.00	1.00		1.00
Lane Grp Cap(c), veh/h	242	214	175	260	0	178	216	3844	1089	528	4010	1092
V/C Ratio(X)	0.24	0.26	0.62	0.20	0.00	0.47	0.21	0.25	0.04	0.10	0.66	0.04
Avail Cap(c_a), veh/h	311	666	545	336	0	579	280	3844	1089	588	4010	1092
HCM Platoon Ratio	1.00	1.00	1.00	1.00	1.00	1.00	2.00	2.00	2.00	2.00	2.00	2.00
Upstream Filter(I)	1.00	1.00	1.00	1.00	0.00	1.00	1.00	1.00	1.00	1.00	1.00	1.00
Uniform Delay (d), s/veh	43.7	49.7	51.9	44.3	0.0	51.9	4.2	0.0	0.0	4.1	0.0	0.0
Incr Delay (d2), s/veh	0.5	0.6	3.5	0.4	0.0	1.9	0.5	0.2	0.1	0.1	0.9	0.1
Initial Q Delay(d3),s/veh	0.0	0.0	0.0	0.0	0.0	0.0	0.0	0.0	0.0	0.0	0.0	0.0
%ile Back of Q (50%), veh/ln	1.6	1.6	3.4	1.4	0.0	2.6	0.3	0.1	0.0	0.3	0.3	0.0
Lane Grp Delay (d), s/veh	44.2	50.4	55.4	44.6	0.0	53.8	4.7	0.2	0.1	4.2	0.9	0.1
Lane Grp LOS	D	D	E	D		D	A	A	A	A	A	A
Approach Vol, veh/h		222			135			1052			2728	
Approach Delay, s/veh		51.2			50.3			0.3			0.9	
Approach LOS		D			D			A			A	

Timer												
Assigned Phs	3	8		7	4		1	6		5	2	
Phs Duration (G+Y+Rc), s	10.3	16.5		9.7	15.9		8.6	87.0		8.9	87.3	
Change Period (Y+Rc), s	5.5	5.5		5.5	5.5		5.5	5.5		5.5	5.5	
Max Green Setting (Gmax), s	9.5	39.5		9.5	39.5		7.5	81.5		7.5	81.5	
Max Q Clear Time (g_c+I1), s	5.5	10.0		5.1	7.7		2.8	2.0		3.0	2.0	
Green Ext Time (p_c), s	0.0	1.0		0.0	1.0		0.0	54.1		0.0	54.1	

Intersection Summary												
HCM 2010 Ctrl Delay			5.1									
HCM 2010 LOS			A									

Notes

HCM 2010 Signalized Intersection Summary
4290: Midway Rd & Proton Dr

7/20/2015

Movement	EBL	EBT	EBR	WBL	WBT	WBR	NBL	NBT	NBR	SBL	SBT	SBR
Lane Configurations												
Volume (veh/h)	73	25	162	3	7	29	35	987	11	214	1952	77
Number	3	8	18	7	4	14	1	6	16	5	2	12
Initial Q (Qb), veh	0	0	0	0	0	0	0	0	0	0	0	0
Ped-Bike Adj(A_pbT)	1.00		1.00	1.00		1.00	1.00		1.00	1.00		1.00
Parking Bus Adj	1.00	1.00	1.00	1.00	1.00	1.00	1.00	1.00	1.00	1.00	1.00	1.00
Adj Sat Flow veh/h/ln	186.3	193.7	190.0	190.0	186.3	186.3	186.3	186.3	190.0	186.3	186.3	190.0
Lanes	1	1	0	0	1	1	1	3	0	1	3	0
Cap, veh/h	252	82	248	55	111	147	210	3595	55	486	3721	151
Arrive On Green	0.08	0.19	0.19	0.09	0.09	0.09	0.04	0.65	0.64	0.17	1.00	1.00
Sat Flow, veh/h	1774	424	1286	212	1195	1583	1774	5489	84	1774	5333	217
Grp Volume(v), veh/h	92	0	266	14	0	32	36	753	373	285	1699	841
Grp Sat Flow(s),veh/h/ln	1774	0	1710	1407	0	1583	1774	1863	1848	1774	1863	1824
Q Serve(g_s), s	5.9	0.0	19.6	0.0	0.0	2.5	0.8	11.5	11.5	5.8	0.0	0.0
Cycle Q Clear(g_c), s	5.9	0.0	19.6	6.4	0.0	2.5	0.8	11.5	11.5	5.8	0.0	0.0
Prop In Lane	1.00		0.75	0.29		1.00	1.00		0.05	1.00		0.12
Lane Grp Cap(c), veh/h	252	0	330	166	0	147	210	2440	1210	486	2599	1273
V/C Ratio(X)	0.37	0.00	0.81	0.08	0.00	0.22	0.17	0.31	0.31	0.59	0.65	0.66
Avail Cap(c_a), veh/h	316	0	623	376	0	360	285	2440	1210	633	2599	1273
HCM Platoon Ratio	1.00	1.00	1.00	1.00	1.00	1.00	1.00	1.00	1.00	2.00	2.00	2.00
Upstream Filter(I)	1.00	0.00	1.00	1.00	0.00	1.00	1.00	1.00	1.00	1.00	1.00	1.00
Uniform Delay (d), s/veh	46.4	0.0	50.9	54.7	0.0	55.4	6.2	9.8	9.9	5.6	0.0	0.0
Incr Delay (d2), s/veh	0.9	0.0	4.7	0.2	0.0	0.7	0.4	0.3	0.7	1.1	1.3	2.7
Initial Q Delay(d3),s/veh	0.0	0.0	0.0	0.0	0.0	0.0	0.0	0.0	0.0	0.0	0.0	0.0
%ile Back of Q (50%), veh/ln	2.7	0.0	9.1	0.4	0.0	0.0	0.3	4.9	5.0	1.7	0.5	1.0
Lane Grp Delay (d), s/veh	47.3	0.0	55.5	54.9	0.0	56.1	6.6	10.2	10.5	6.8	1.3	2.7
Lane Grp LOS	D		E	D		E	A	B	B	A	A	A
Approach Vol, veh/h		358			46			1162			2825	
Approach Delay, s/veh		53.4			55.7			10.2			2.3	
Approach LOS		D			E			B			A	
Timer												
Assigned Phs	3	8			4		1	6		5	2	
Phs Duration (G+Y+Rc), s	13.2	28.4			15.2		8.4	89.4		14.1	95.0	
Change Period (Y+Rc), s	5.5	5.5			5.5		5.5	5.5		5.5	5.5	
Max Green Setting (Gmax), s	12.5	45.5			27.5		8.5	78.5		19.5	89.5	
Max Q Clear Time (g_c+I1), s	7.9	21.6			8.4		2.8	13.5		7.8	2.0	
Green Ext Time (p_c), s	0.1	1.3			1.3		0.0	42.6		0.8	50.6	
Intersection Summary												
HCM 2010 Ctrl Delay			9.1									
HCM 2010 LOS			A									
Notes												

HCM 2010 Signalized Intersection Summary
4295: Runyon Rd & Beltline Rd

7/20/2015

Movement	EBL	EBT	EBR	WBL	WBT	WBR	NBL	NBT	NBR	SBL	SBT	SBR
Lane Configurations												
Volume (veh/h)	8	1407	12	21	1097	0	19	0	21	9	1	2
Number	1	6	16	5	2	12	7	4	14	3	8	18
Initial Q (Qb), veh	0	0	0	0	0	0	0	0	0	0	0	0
Ped-Bike Adj(A_pbT)	1.00		1.00	1.00		1.00	1.00		1.00	1.00		1.00
Parking Bus Adj	1.00	1.00	1.00	1.00	1.00	1.00	1.00	1.00	1.00	1.00	1.00	1.00
Adj Sat Flow veh/h/ln	186.3	186.3	186.3	186.3	186.3	190.0	186.3	186.3	190.0	186.3	186.3	190.0
Lanes	1	3	1	1	3	0	2	1	0	1	1	0
Cap, veh/h	455	4221	1196	404	4275	0	407	0	100	173	56	42
Arrive On Green	0.07	1.00	1.00	0.09	1.00	0.00	0.04	0.00	0.05	0.03	0.06	0.04
Sat Flow, veh/h	1774	5588	1583	1774	5588	0	3442	0	1583	1774	990	742
Grp Volume(v), veh/h	18	1481	22	40	1261	0	28	0	45	16	0	7
Grp Sat Flow(s),veh/h/ln	1774	1863	1583	1774	1863	0	1721	0	1583	1774	0	1732
Q Serve(g_s), s	0.2	0.0	0.0	0.5	0.0	0.0	0.9	0.0	3.3	1.0	0.0	0.5
Cycle Q Clear(g_c), s	0.2	0.0	0.0	0.5	0.0	0.0	0.9	0.0	3.3	1.0	0.0	0.5
Prop In Lane	1.00		1.00	1.00		0.00	1.00		1.00	1.00		0.43
Lane Grp Cap(c), veh/h	455	4221	1196	404	4275	0	407	0	100	173	0	99
V/C Ratio(X)	0.04	0.35	0.02	0.10	0.29	0.00	0.07	0.00	0.45	0.09	0.00	0.07
Avail Cap(c_a), veh/h	540	4221	1196	472	4275	0	554	0	465	305	0	552
HCM Platoon Ratio	2.00	2.00	2.00	2.00	2.00	2.00	1.00	1.00	1.00	1.00	1.00	1.00
Upstream Filter(I)	0.88	0.88	0.88	1.00	1.00	0.00	1.00	0.00	1.00	1.00	0.00	1.00
Uniform Delay (d), s/veh	2.5	0.0	0.0	2.1	0.0	0.0	48.1	0.0	54.5	49.6	0.0	53.5
Incr Delay (d2), s/veh	0.0	0.2	0.0	0.1	0.2	0.0	0.1	0.0	3.1	0.2	0.0	0.3
Initial Q Delay(d3),s/veh	0.0	0.0	0.0	0.0	0.0	0.0	0.0	0.0	0.0	0.0	0.0	0.0
%ile Back of Q (50%), veh/ln	0.1	0.1	0.0	0.1	0.1	0.0	0.4	0.0	1.5	0.5	0.0	0.2
Lane Grp Delay (d), s/veh	2.5	0.2	0.0	2.2	0.2	0.0	48.2	0.0	57.6	49.8	0.0	53.8
Lane Grp LOS	A	A	A	A	A		D		E	D		D
Approach Vol, veh/h		1521			1301			73			23	
Approach Delay, s/veh		0.2			0.2			54.0			51.0	
Approach LOS		A			A			D			D	
Timer												
Assigned Phs	1	6		5	2		7	4		3	8	
Phs Duration (G+Y+Rc), s	7.3	93.0		8.4	94.1		7.9	10.6		7.1	9.8	
Change Period (Y+Rc), s	5.5	5.5		5.5	5.5		5.5	5.5		5.5	5.5	
Max Green Setting (Gmax), s	7.5	87.5		7.5	87.5		7.5	32.5		10.5	35.5	
Max Q Clear Time (g_c+I1), s	2.2	2.0		2.5	2.0		2.9	5.3		3.0	2.5	
Green Ext Time (p_c), s	0.0	29.5		0.0	29.5		0.0	0.2		0.0	0.2	
Intersection Summary												
HCM 2010 Ctrl Delay			2.0									
HCM 2010 LOS			A									
Notes												

Lane Group	EBL	EBT	EBR	WBL	WBT	WBR	NBL	NBT	NBR	SBL	SBT	SBR
Lane Configurations												
Volume (vph)	146	1328	44	77	979	48	25	52	47	27	69	123
Ideal Flow (vphpl)	1900	1900	1900	1900	1900	1900	1900	1900	1900	1900	1900	1900
Storage Length (ft)	150		0	200		0	100		140	100		120
Storage Lanes	1		0	1		0	1		1	1		0
Taper Length (ft)	25			25			25			25		
Lane Util. Factor	1.00	0.91	0.91	1.00	0.91	0.91	1.00	1.00	1.00	1.00	1.00	1.00
Frt		0.993			0.993				0.850			0.850
Flt Protected	0.950			0.950			0.950			0.950		
Satd. Flow (prot)	1770	5050	0	1770	5050	0	1770	1863	1583	1770	1863	1583
Flt Permitted	0.165			0.151			0.542			0.697		
Satd. Flow (perm)	307	5050	0	281	5050	0	1010	1863	1583	1298	1863	1583
Right Turn on Red			Yes			Yes			Yes			Yes
Satd. Flow (RTOR)		6			7				170			211
Link Speed (mph)		40			40			30			30	
Link Distance (ft)		907			950			997			322	
Travel Time (s)		15.5			16.2			22.7			7.3	
Peak Hour Factor	0.59	0.94	0.68	0.90	0.89	0.86	0.89	0.94	0.90	0.73	0.91	0.68
Adj. Flow (vph)	247	1413	65	86	1100	56	28	55	52	37	76	181
Shared Lane Traffic (%)												
Lane Group Flow (vph)	247	1478	0	86	1156	0	28	55	52	37	76	181
Enter Blocked Intersection	No	No	No	No	No	No	No	No	No	No	No	No
Lane Alignment	Left	Left	Right	Left	Left	Right	Left	Left	Right	Left	Left	Right
Median Width(ft)		12			12			12			12	
Link Offset(ft)		0			0			0			0	
Crosswalk Width(ft)		16			16			16			16	
Two way Left Turn Lane												
Headway Factor	1.00	1.00	1.00	1.00	1.00	1.00	1.00	1.00	1.00	1.00	1.00	1.00
Turning Speed (mph)	15		9	15		9	15		9	15		9
Number of Detectors	1	1		1	1		1	1	1	1	1	1
Detector Template												
Leading Detector (ft)	50	50		50	50		50	50	50	50	50	50
Trailing Detector (ft)	0	0		0	0		0	0	0	0	0	0
Detector 1 Position(ft)	0	0		0	0		0	0	0	0	0	0
Detector 1 Size(ft)	50	50		50	50		50	50	50	50	50	50
Detector 1 Type	Cl+Ex	Cl+Ex		Cl+Ex	Cl+Ex		Cl+Ex	Cl+Ex	Cl+Ex	Cl+Ex	Cl+Ex	Cl+Ex
Detector 1 Channel												
Detector 1 Extend (s)	0.0	0.0		0.0	0.0		0.0	0.0	0.0	0.0	0.0	0.0
Detector 1 Queue (s)	0.0	0.0		0.0	0.0		0.0	0.0	0.0	0.0	0.0	0.0
Detector 1 Delay (s)	0.0	0.0		0.0	0.0		0.0	0.0	0.0	0.0	0.0	0.0
Turn Type	pm+pt	NA		pm+pt	NA		custom	NA	Perm	pm+pt	NA	custom
Protected Phases	1	6 14		13	2 10		15	4 12		11	8 16	
Permitted Phases	6 14			2 10			4		4 12	8 16		8
Detector Phase	1	6 14		13	2 10		15	4 12	4 12	11	8 16	8
Switch Phase												
Minimum Initial (s)	4.0			4.0			4.0			4.0		4.0
Minimum Split (s)	13.0			13.0			13.0			13.0		16.0
Total Split (s)	20.0			18.0			13.0			13.0		20.0
Total Split (%)	12.5%			11.3%			8.1%			8.1%		12.5%

Lane Group	ø2	ø4	ø6	ø10	ø12	ø14	ø16
Lane Configurations							
Volume (vph)							
Ideal Flow (vphpl)							
Storage Length (ft)							
Storage Lanes							
Taper Length (ft)							
Lane Util. Factor							
Frt							
Flt Protected							
Satd. Flow (prot)							
Flt Permitted							
Satd. Flow (perm)							
Right Turn on Red							
Satd. Flow (RTOR)							
Link Speed (mph)							
Link Distance (ft)							
Travel Time (s)							
Peak Hour Factor							
Adj. Flow (vph)							
Shared Lane Traffic (%)							
Lane Group Flow (vph)							
Enter Blocked Intersection							
Lane Alignment							
Median Width(ft)							
Link Offset(ft)							
Crosswalk Width(ft)							
Two way Left Turn Lane							
Headway Factor							
Turning Speed (mph)							
Number of Detectors							
Detector Template							
Leading Detector (ft)							
Trailing Detector (ft)							
Detector 1 Position(ft)							
Detector 1 Size(ft)							
Detector 1 Type							
Detector 1 Channel							
Detector 1 Extend (s)							
Detector 1 Queue (s)							
Detector 1 Delay (s)							
Turn Type							
Protected Phases	2	4	6	10	12	14	16
Permitted Phases							
Detector Phase							
Switch Phase							
Minimum Initial (s)	4.0	4.0	4.0	4.0	4.0	4.0	4.0
Minimum Split (s)	29.5	16.0	24.5	22.0	22.0	22.0	22.0
Total Split (s)	35.0	20.0	55.0	53.0	19.0	35.0	19.0
Total Split (%)	22%	13%	34%	33%	12%	22%	12%

Lane Group	EBL	EBT	EBR	WBL	WBT	WBR	NBL	NBT	NBR	SBL	SBT	SBR
Maximum Green (s)	14.5			12.5			7.5			7.5		14.5
Yellow Time (s)	3.5			3.5			3.5			3.5		3.5
All-Red Time (s)	2.0			2.0			2.0			2.0		2.0
Lost Time Adjust (s)	-2.5			-2.5			-3.0			-2.5		-2.5
Total Lost Time (s)	3.0			3.0			2.5			3.0		3.0
Lead/Lag	Lead			Lead			Lead			Lead		
Lead-Lag Optimize?	Yes			Yes			Yes			Yes		
Vehicle Extension (s)	3.0			3.0			3.0			3.0		3.0
Recall Mode	None			None			None			None		None
Walk Time (s)												5.0
Flash Dont Walk (s)												2.0
Pedestrian Calls (#/hr)												0
Act Effct Green (s)	95.8	95.8		89.5	89.5		20.7	29.8	29.8	38.1	32.3	10.8
Actuated g/C Ratio	0.60	0.60		0.56	0.56		0.13	0.19	0.19	0.24	0.20	0.07
v/c Ratio	0.76	0.49		0.35	0.41		0.16	0.16	0.12	0.11	0.20	0.60
Control Delay	35.6	9.9		17.3	10.5		33.0	29.4	0.6	23.7	29.1	12.7
Queue Delay	0.0	0.0		0.0	0.0		0.0	0.0	0.0	0.0	0.0	0.0
Total Delay	35.6	9.9		17.3	10.5		33.0	29.4	0.6	23.7	29.1	12.7
LOS	D	A		B	B		C	C	A	C	C	B
Approach Delay		13.6			11.0			19.1			18.3	
Approach LOS		B			B			B			B	

Intersection Summary	
Area Type:	Other
Cycle Length: 160	
Actuated Cycle Length: 160	
Offset: 75 (47%), Referenced to phase 2:WBTL and 6:EBTL, Start of 1st Green	
Natural Cycle: 130	
Control Type: Actuated-Coordinated	
Maximum v/c Ratio: 0.76	
Intersection Signal Delay: 13.3	Intersection LOS: B
Intersection Capacity Utilization 49.1%	ICU Level of Service A
Analysis Period (min) 15	

Splits and Phases: 4296: Surveyor Blvd & Beltline Rd

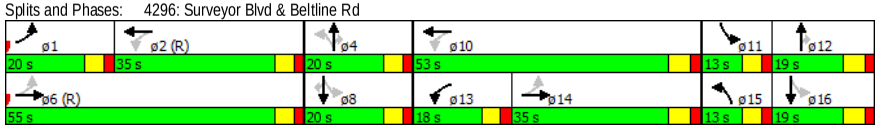

Lane Group	ø2	ø4	ø6	ø10	ø12	ø14	ø16
Maximum Green (s)	29.5	14.5	49.5	47.0	13.0	29.0	13.0
Yellow Time (s)	3.5	3.5	3.5	4.0	4.0	4.0	4.0
All-Red Time (s)	2.0	2.0	2.0	2.0	2.0	2.0	2.0
Lost Time Adjust (s)							
Total Lost Time (s)							
Lead/Lag	Lag				Lag	Lag	Lag
Lead-Lag Optimize?	Yes						
Vehicle Extension (s)	3.0	3.0	3.0	3.0	3.0	3.0	3.0
Recall Mode	C-Max	Min	C-Max	Max	Min	None	Max
Walk Time (s)	5.0	5.0	5.0	5.0	5.0	5.0	5.0
Flash Dont Walk (s)	19.0	24.0	14.0	11.0	11.0	11.0	11.0
Pedestrian Calls (#/hr)	0	0	0	0	0	0	0
Act Effct Green (s)							
Actuated g/C Ratio							
v/c Ratio							
Control Delay							
Queue Delay							
Total Delay							
LOS							
Approach Delay							
Approach LOS							

Intersection Summary

HCM 2010 TWSC
2: Northeast Drive & Beltline Rd

7/20/2015

Intersection	
Intersection Delay, s/veh	0

Movement	EBT	EBR	WBL	WBT	NBL	NBR
Vol, veh/h	1552	0	0	0	0	0
Conflicting Peds, #/hr	0	0	0	0	0	0
Sign Control	Free	Free	Free	Free	Stop	Stop
RT Channelized	-	None	-	None	-	None
Storage Length	-	140	-	-	-	0
Veh in Median Storage, #	0	-	-	0	0	-
Grade, %	0	-	-	0	0	-
Peak Hour Factor	92	92	92	92	92	92
Heavy Vehicles, %	2	2	2	2	2	2
Mvmt Flow	1687	0	0	0	0	0

Major/Minor	Major1		Major2		Minor1	
Conflicting Flow All	0	0	1687	0	1687	843
Stage 1	-	-	-	-	1687	-
Stage 2	-	-	-	-	0	-
Follow-up Headway	-	-	3.12	-	3.82	3.92
Pot Capacity-1 Maneuver	-	-	180	-	137	264
Stage 1	-	-	-	-	90	-
Stage 2	-	-	-	-	-	-
Time blocked-Platoon, %	-	-		-		
Mov Capacity-1 Maneuver	-	-	180	-	137	264
Mov Capacity-2 Maneuver	-	-	-	-	137	-
Stage 1	-	-	-	-	90	-
Stage 2	-	-	-	-	-	-

Approach	EB	WB	NB
HCM Control Delay, s	0	0	0
HCM LOS			A

Minor Lane / Major Mvmt	NBLn1	EBT	EBR	WBL	WBT
Capacity (veh/h)	0	-	-	180	-
HCM Lane V/C Ratio	+	-	-	-	-
HCM Control Delay (s)	0	-	-	0	-
HCM Lane LOS	A			A	
HCM 95th %tile Q(veh)	+	-	-	0	-

Notes

~ : Volume Exceeds Capacity; $: Delay Exceeds 300 Seconds; Error : Computation Not Defined

HCM 2010 TWSC
4: Midway Rd & East Drive

7/20/2015

Intersection	
Intersection Delay, s/veh	2.2

Movement	EBL	EBR	NBL	NBT	SBT	SBR
Vol, veh/h	5	29	24	1008	2368	7
Conflicting Peds, #/hr	0	0	0	0	0	0
Sign Control	Stop	Stop	Free	Free	Free	Free
RT Channelized	-	None	-	None	-	None
Storage Length	0	-	125	-	-	-
Veh in Median Storage, #	0	-	-	0	0	-
Grade, %	0	-	-	0	0	-
Peak Hour Factor	92	92	92	92	92	92
Heavy Vehicles, %	2	2	2	2	2	2
Mvmt Flow	5	32	26	1096	2574	8

Major/Minor	Minor2		Major1		Major2	
Conflicting Flow All	3124	1291	2582	0	-	0
Stage 1	2634	-	-	-	-	-
Stage 2	490	-	-	-	-	-
Follow-up Headway	3.82	3.92	3.12	-	-	-
Pot Capacity-1 Maneuver	22	132	63	-	-	-
Stage 1	22	-	-	-	-	-
Stage 2	531	-	-	-	-	-
Time blocked-Platoon, %				-	-	-
Mov Capacity-1 Maneuver	13	132	63	-	-	-
Mov Capacity-2 Maneuver	13	-	-	-	-	-
Stage 1	22	-	-	-	-	-
Stage 2	312	-	-	-	-	-

Approach	EB	NB	SB
HCM Control Delay, s	150.7	2.3	0
HCM LOS	F		

Minor Lane / Major Mvmt	NBL	NBT	EBLn1	SBU	SBT	SBR
Capacity (veh/h)	63	-	56	-	-	-
HCM Lane V/C Ratio	0.414	-	0.66	-	-	-
HCM Control Delay (s)	97.725	-	150.7	-	-	-
HCM Lane LOS	F		F			
HCM 95th %tile Q(veh)	1.579	-	2.718	-	-	-

Notes

~ : Volume Exceeds Capacity; $: Delay Exceeds 300 Seconds; Error : Computation Not Defined

Intersection	
Intersection Delay, s/veh	0.8

Movement	EBL	EBT	EBR	WBL	WBT	WBR	NBL	NBT	NBR	SBL	SBT	SBR
Vol, veh/h	0	0	1	4	0	9	6	1000	35	89	2296	0
Conflicting Peds, #/hr	0	0	0	0	0	0	0	0	0	0	0	0
Sign Control	Stop	Stop	Stop	Stop	Stop	Stop	Free	Free	Free	Free	Free	Free
RT Channelized	-	-	None	-	-	None	-	-	None	-	-	None
Storage Length	-	-	-	-	-	0	130	-	-	125	-	-
Veh in Median Storage, #	-	0	-	-	0	-	-	0	-	-	0	-
Grade, %	-	0	-	-	0	-	-	0	-	-	0	-
Peak Hour Factor	92	92	92	92	92	92	92	92	92	92	92	92
Heavy Vehicles, %	2	2	2	2	2	2	2	2	2	2	2	2
Mvmt Flow	0	0	1	4	0	10	7	1087	38	97	2496	0

Major/Minor	Minor2			Minor1			Major1			Major2		
Conflicting Flow All	3137	3827	1248	2311	3808	563	2496	0	0	1125	0	0
Stage 1	2689	2689	-	1119	1119	-	-	-	-	-	-	-
Stage 2	448	1138	-	1192	2689	-	-	-	-	-	-	-
Follow-up Headway	3.82	4.02	3.92	3.82	4.02	3.92	3.12	-	-	3.12	-	-
Pot Capacity-1 Maneuver	12	4	141	41	4	402	70	-	-	340	-	-
Stage 1	12	45	-	164	280	-	-	-	-	-	-	-
Stage 2	512	275	-	178	45	-	-	-	-	-	-	-
Time blocked-Platoon, %								-	-		-	-
Mov Capacity-1 Maneuver	8	3	141	29	3	402	70	-	-	340	-	-
Mov Capacity-2 Maneuver	8	3	-	29	3	-	-	-	-	-	-	-
Stage 1	11	32	-	148	252	-	-	-	-	-	-	-
Stage 2	450	248	-	126	32	-	-	-	-	-	-	-

Approach	EB	WB	NB	SB
HCM Control Delay, s	30.7	56.9	0.4	0.7
HCM LOS	D	F		

Minor Lane / Major Mvmt	NBL	NBT	NBR	EBLn1	WBLn1	WBLn2	SBL	SBT	SBR
Capacity (veh/h)	70	-	-	141	48	402	340	-	-
HCM Lane V/C Ratio	0.093	-	-	0.008	0.159	0.016	0.285	-	-
HCM Control Delay (s)	61.646	-	-	30.7	93.6	14.1	19.745	-	-
HCM Lane LOS	F			D	F	B	C		
HCM 95th %tile Q(veh)	0.297	-	-	0.023	0.513	0.049	1.15	-	-

Notes

~ : Volume Exceeds Capacity; $: Delay Exceeds 300 Seconds; Error : Computation Not Defined

Intersection	
Intersection Delay, s/veh	-

Movement	EBL	EBT	WBT	WBR	SBL	SBR
Vol, veh/h	0	0	0	0	0	0
Conflicting Peds, #/hr	0	0	0	0	0	0
Sign Control	Free	Free	Free	Free	Stop	Stop
RT Channelized	-	None	-	None	-	None
Storage Length	-	-	-	-	0	-
Veh in Median Storage, #	-	0	0	-	0	-
Grade, %	-	0	0	-	0	-
Peak Hour Factor	92	92	92	92	92	92
Heavy Vehicles, %	2	2	2	2	2	2
Mvmt Flow	0	0	0	0	0	0

Major/Minor	Major1		Major2		Minor2	
Conflicting Flow All	0	0	-	0	0	0
Stage 1	-	-	-	-	0	-
Stage 2	-	-	-	-	0	-
Follow-up Headway	2.218	-	-	-	3.518	3.318
Pot Capacity-1 Maneuver	-	-	-	-	-	-
Stage 1	-	-	-	-	-	-
Stage 2	-	-	-	-	-	-
Time blocked-Platoon, %		-	-	-		
Mov Capacity-1 Maneuver	-	-	-	-	-	-
Mov Capacity-2 Maneuver	-	-	-	-	-	-
Stage 1	-	-	-	-	-	-
Stage 2	-	-	-	-	-	-

Approach	EB	WB	SB
HCM Control Delay, s	0	0	0
HCM LOS			A

Minor Lane / Major Mvmt	EBL	EBT	WBT	WBR	SBLn1
Capacity (veh/h)	-	-	-	-	+
HCM Lane V/C Ratio	-	-	-	-	+
HCM Control Delay (s)	0	-	-	-	0
HCM Lane LOS	A				A
HCM 95th %tile Q(veh)	-	-	-	-	+

Notes

~ : Volume Exceeds Capacity; $: Delay Exceeds 300 Seconds; Error : Computation Not Defined

Two Way Analysis cannot be performed on an All Way Stop Intersection.

Intersection	
Intersection Delay, s/veh	0.1

Movement	EBL	EBT	EBR	WBL	WBT	WBR	NBL	NBT	NBR	SBL	SBT	SBR
Vol, veh/h	15	1552	0	0	1045	3	0	0	0	0	0	2
Conflicting Peds, #/hr	0	0	0	0	0	0	0	0	0	0	0	0
Sign Control	Free	Free	Free	Free	Free	Free	Stop	Stop	Stop	Stop	Stop	Stop
RT Channelized	-	-	None	-	-	None	-	-	None	-	-	None
Storage Length	160	-	160	175	-	-	-	-	0	-	-	0
Veh in Median Storage, #	-	0	-	-	0	-	-	0	-	-	0	-
Grade, %	-	0	-	-	0	-	-	0	-	-	0	-
Peak Hour Factor	92	92	92	92	92	92	92	92	92	92	92	92
Heavy Vehicles, %	2	2	2	2	2	2	2	2	2	2	2	2
Mvmt Flow	16	1687	0	0	1136	3	0	0	0	0	0	2

Major/Minor	Major1			Major2			Minor1			Minor2		
Conflicting Flow All	1139	0	0	1687	0	0	2174	2859	843	1845	2858	570
Stage 1	-	-	-	-	-	-	1720	1720	-	1138	1138	-
Stage 2	-	-	-	-	-	-	454	1139	-	707	1720	-
Follow-up Headway	3.12	-	-	3.12	-	-	3.82	4.02	3.92	3.82	4.02	3.92
Pot Capacity-1 Maneuver	335	-	-	180	-	-	49	17	264	79	17	398
Stage 1	-	-	-	-	-	-	61	143	-	159	275	-
Stage 2	-	-	-	-	-	-	508	274	-	357	143	-
Time blocked-Platoon, %		-	-		-	-						
Mov Capacity-1 Maneuver	335	-	-	180	-	-	47	16	264	76	16	398
Mov Capacity-2 Maneuver	-	-	-	-	-	-	47	16	-	76	16	-
Stage 1	-	-	-	-	-	-	58	136	-	151	275	-
Stage 2	-	-	-	-	-	-	505	274	-	340	136	-

Approach	EB	WB	NB	SB
HCM Control Delay, s	0.2	0	0	14.1
HCM LOS			A	B

Minor Lane / Major Mvmt	NBLn1	EBL	EBT	EBR	WBL	WBT	WBR	SBLn1
Capacity (veh/h)	0	335	-	-	180	-	-	398
HCM Lane V/C Ratio	+	0.049	-	-	-	-	-	0.005
HCM Control Delay (s)	0	16.295	-	-	0	-	-	14.1
HCM Lane LOS	A	C			A			B
HCM 95th %tile Q(veh)	+	0.153	-	-	0	-	-	0.016

Notes

~ : Volume Exceeds Capacity; $: Delay Exceeds 300 Seconds; Error : Computation Not Defined

Intersection	
Intersection Delay, s/veh	8.2
Intersection LOS	A

Movement	EBL	EBT	EBR	WBL	WBT	WBR	NBL	NBT	NBR	SBL	SBT	SBR
Vol, veh/h	9	15	1	22	4	41	0	72	48	83	80	3
Peak Hour Factor	0.92	0.92	0.92	0.92	0.92	0.92	0.92	0.92	0.92	0.92	0.92	0.92
Heavy Vehicles, %	2	2	2	2	2	2	2	2	2	2	2	2
Mvmt Flow	10	16	1	24	4	45	0	78	52	90	87	3
Number of Lanes	0	1	0	0	1	0	0	1	0	0	1	0

Approach	EB	WB	NB	SB
Opposing Approach	WB	EB	SB	NB
Opposing Lanes	1	1	1	1
Conflicting Approach Left	SB	NB	EB	WB
Conflicting Lanes Left	1	1	1	1
Conflicting Approach Right	NB	SB	WB	EB
Conflicting Lanes Right	1	1	1	1
HCM Control Delay	7.9	7.8	7.8	8.6
HCM LOS	A	A	A	A

Lane	NBLn1	EBLn1	WBLn1	SBLn1
Vol Left, %	0%	36%	33%	50%
Vol Thru, %	60%	60%	6%	48%
Vol Right, %	40%	4%	61%	2%
Sign Control	Stop	Stop	Stop	Stop
Traffic Vol by Lane	120	25	67	166
LT Vol	72	15	4	80
Through Vol	48	1	41	3
RT Vol	0	9	22	83
Lane Flow Rate	130	27	73	180
Geometry Grp	1	1	1	1
Degree of Util (X)	0.149	0.036	0.088	0.215
Departure Headway (Hd)	4.117	4.753	4.351	4.298
Convergence, Y/N	Yes	Yes	Yes	Yes
Cap	875	756	827	821
Service Time	2.125	2.764	2.359	2.397
HCM Lane V/C Ratio	0.149	0.036	0.088	0.219
HCM Control Delay	7.8	7.9	7.8	8.6
HCM Lane LOS	A	A	A	A
HCM 95th-tile Q	0.5	0.1	0.3	0.8

Notes

~ : Volume Exceeds Capacity; $: Delay Exceeds 300 Seconds; Error : Computation Not Defined

HCM 2010 Signalized Intersection Summary
4278: Midway Rd & Lindbergh Dr

7/20/2015

Movement	EBL	EBT	EBR	WBL	WBT	WBR	NBL	NBT	NBR	SBL	SBT	SBR
Lane Configurations												
Volume (veh/h)	59	32	44	55	17	189	28	1985	84	220	1832	36
Number	3	8	18	7	4	14	1	6	16	5	2	12
Initial Q (Qb), veh	0	0	0	0	0	0	0	0	0	0	0	0
Ped-Bike Adj(A_pbT)	1.00		1.00	1.00		1.00	1.00		1.00	1.00		1.00
Parking Bus Adj	1.00	1.00	1.00	1.00	1.00	1.00	1.00	1.00	1.00	1.00	1.00	1.00
Adj Sat Flow veh/h/ln	186.3	186.3	190.0	186.3	193.7	186.3	186.3	186.3	190.0	186.3	186.3	190.0
Lanes	1	1	0	1	1	1	1	3	0	1	3	0
Cap, veh/h	356	118	179	319	341	278	176	3021	137	340	3471	68
Arrive On Green	0.07	0.18	0.17	0.07	0.18	0.18	0.08	1.00	1.00	0.11	0.64	0.63
Sat Flow, veh/h	1774	667	1016	1774	1937	1583	1774	5306	240	1774	5462	107
Grp Volume(v), veh/h	87	0	111	85	23	230	43	1450	712	289	1560	775
Grp Sat Flow(s),veh/h/ln	1774	0	1683	1774	1937	1583	1774	1863	1820	1774	1863	1844
Q Serve(g_s), s	5.8	0.0	8.6	5.6	1.5	20.7	1.4	0.0	0.0	10.5	38.8	39.1
Cycle Q Clear(g_c), s	5.8	0.0	8.6	5.6	1.5	20.7	1.4	0.0	0.0	10.5	38.8	39.1
Prop In Lane	1.00		0.60	1.00		1.00	1.00		0.13	1.00		0.06
Lane Grp Cap(c), veh/h	356	0	297	319	341	278	176	2122	1037	340	2368	1172
V/C Ratio(X)	0.24	0.00	0.37	0.27	0.07	0.83	0.24	0.68	0.69	0.85	0.66	0.66
Avail Cap(c_a), veh/h	379	0	330	368	406	332	238	2122	1037	405	2368	1172
HCM Platoon Ratio	1.00	1.00	1.00	1.00	1.00	1.00	2.00	2.00	2.00	1.00	1.00	1.00
Upstream Filter(I)	1.00	0.00	1.00	1.00	1.00	1.00	1.00	1.00	1.00	1.00	1.00	1.00
Uniform Delay (d), s/veh	44.4	0.0	54.1	44.7	50.8	58.8	14.9	0.0	0.0	26.7	16.9	17.0
Incr Delay (d2), s/veh	0.4	0.0	0.8	0.4	0.1	13.6	0.7	1.8	3.7	13.8	1.5	2.9
Initial Q Delay(d3),s/veh	0.0	0.0	0.0	0.0	0.0	0.0	0.0	0.0	0.0	0.0	0.0	0.0
%ile Back of Q (50%), veh/ln	2.7	0.0	3.9	2.6	0.7	9.6	0.6	0.5	1.1	8.3	17.2	17.5
Lane Grp Delay (d), s/veh	44.7	0.0	54.9	45.2	50.9	72.3	15.6	1.8	3.7	40.6	18.4	19.9
Lane Grp LOS	D		D	D	D	E	B	A	A	D	B	B
Approach Vol, veh/h		198			338			2205			2624	
Approach Delay, s/veh		50.4			64.0			2.7			21.3	
Approach LOS		D			E			A			C	

Timer												
Assigned Phs	3	8		7	4		1	6		5	2	
Phs Duration (G+Y+Rc), s	13.1	29.1		13.0	29.0		8.8	87.2		18.6	97.0	
Change Period (Y+Rc), s	5.5	5.5		5.5	5.5		5.5	5.5		5.5	5.5	
Max Green Setting (Gmax), s	9.5	26.5		11.5	28.5		8.5	81.5		18.5	91.5	
Max Q Clear Time (g_c+I1), s	7.8	10.6		7.6	22.7		3.4	2.0		12.5	41.1	
Green Ext Time (p_c), s	0.0	1.4		0.1	0.8		0.0	63.5		0.6	43.5	

Intersection Summary												
HCM 2010 Ctrl Delay			17.4									
HCM 2010 LOS			B									

Notes

HCM 2010 Signalized Intersection Summary
4287: Beltway Dr & Beltline Rd

7/20/2015

Movement	EBU	EBT	EBR	WBL	WBT	NBL	NBR
Lane Configurations							
Volume (veh/h)	16	1739	27	87	1819	27	202
Number		6	16	5	2	7	14
Initial Q (Qb), veh		0	0	0	0	0	0
Ped-Bike Adj(A_pbT)			1.00	1.00		1.00	1.00
Parking Bus Adj		1.00	1.00	1.00	1.00	1.00	1.00
Adj Sat Flow veh/h/ln		186.3	190.0	186.3	186.3	186.3	186.3
Lanes		3	0	1	3	1	2
Cap, veh/h		4178	82	168	4704	202	361
Arrive On Green		0.76	0.75	0.06	0.84	0.11	0.11
Sat Flow, veh/h		5463	107	1774	5588	1774	3167
Grp Volume(v), veh/h		1223	605	112	1875	43	238
Grp Sat Flow(s),veh/h/ln		1863	1844	1774	1863	1774	1583
Q Serve(g_s), s		15.6	15.7	2.9	10.9	3.0	9.8
Cycle Q Clear(g_c), s		15.6	15.7	2.9	10.9	3.0	9.8
Prop In Lane			0.06	1.00		1.00	1.00
Lane Grp Cap(c), veh/h		2849	1410	168	4704	202	361
V/C Ratio(X)		0.43	0.43	0.67	0.40	0.21	0.66
Avail Cap(c_a), veh/h		2849	1410	266	4704	417	745
HCM Platoon Ratio		1.00	1.00	1.00	1.00	1.00	1.00
Upstream Filter(I)		1.00	1.00	1.00	1.00	1.00	1.00
Uniform Delay (d), s/veh		5.6	5.6	51.6	2.6	54.7	57.7
Incr Delay (d2), s/veh		0.5	1.0	4.5	0.3	0.5	2.1
Initial Q Delay(d3),s/veh		0.0	0.0	0.0	0.0	0.0	0.0
%ile Back of Q (50%), veh/ln		6.0	6.1	4.1	3.4	1.4	8.5
Lane Grp Delay (d), s/veh		6.1	6.6	56.0	2.8	55.2	59.8
Lane Grp LOS		A	A	E	A	E	E
Approach Vol, veh/h		1828			1987	281	
Approach Delay, s/veh		6.2			5.8	59.1	
Approach LOS		A			A	E	

Timer							
Assigned Phs		6		5	2		
Phs Duration (G+Y+Rc), s		107.0		10.5	117.5		
Change Period (Y+Rc), s		5.5		5.5	5.5		
Max Green Setting (Gmax), s		101.5		12.5	106.5		
Max Q Clear Time (g_c+I1), s		17.7		4.9	12.9		
Green Ext Time (p_c), s		51.1		0.2	54.3		

Intersection Summary							
HCM 2010 Ctrl Delay			9.7				
HCM 2010 LOS			A				

Notes

HCM 2010 Signalized Intersection Summary
4288: Midway Rd & Beltline Rd

7/20/2015

Movement	EBL	EBT	EBR	WBL	WBT	WBR	NBL	NBT	NBR	SBL	SBT	SBR
Lane Configurations												
Volume (veh/h)	169	1180	274	318	1032	398	250	1530	340	367	1130	148
Number	1	6	16	5	2	12	7	4	14	3	8	18
Initial Q (Qb), veh	0	0	0	0	0	0	0	0	0	0	0	0
Ped-Bike Adj(A_pbT)	1.00		1.00	1.00		1.00	1.00		1.00	1.00		1.00
Parking Bus Adj	1.00	1.00	1.00	1.00	1.00	1.00	1.00	1.00	1.00	1.00	1.00	1.00
Adj Sat Flow veh/h/ln	186.3	186.3	186.3	186.3	186.3	190.0	186.3	186.3	186.3	186.3	186.3	186.3
Lanes	2	3	1	2	3	0	2	3	1	2	3	1
Cap, veh/h	409	1921	544	409	1308	521	581	1921	544	409	1642	465
Arrive On Green	0.16	0.46	0.46	0.12	0.34	0.33	0.22	0.46	0.00	0.24	0.59	0.00
Sat Flow, veh/h	3442	5588	1583	3442	3806	1515	3442	5588	1583	3442	5588	1583
Grp Volume(v), veh/h	286	1242	347	324	1098	471	287	1681	0	390	1329	0
Grp Sat Flow(s),veh/h/ln	1721	1863	1583	1721	1863	1595	1721	1863	1583	1721	1863	1583
Q Serve(g_s), s	12.6	27.4	26.9	14.7	43.9	44.1	11.6	43.5	0.0	17.9	29.9	0.0
Cycle Q Clear(g_c), s	12.6	27.4	26.9	14.7	43.9	44.1	11.6	43.5	0.0	17.9	29.9	0.0
Prop In Lane	1.00		1.00	1.00		0.95	1.00		1.00	1.00		1.00
Lane Grp Cap(c), veh/h	409	1921	544	409	1281	548	581	1921	544	409	1642	465
V/C Ratio(X)	0.70	0.65	0.64	0.79	0.86	0.86	0.49	0.88	0.00	0.95	0.81	0.00
Avail Cap(c_a), veh/h	409	1921	544	409	1281	548	581	1921	544	409	1642	465
HCM Platoon Ratio	1.33	1.33	1.33	1.00	1.00	1.00	1.33	1.33	1.33	2.00	2.00	2.00
Upstream Filter(I)	1.00	1.00	1.00	1.00	1.00	1.00	1.00	1.00	0.00	1.00	1.00	0.00
Uniform Delay (d), s/veh	64.7	35.9	35.8	68.6	48.9	49.8	56.1	40.3	0.0	60.6	29.5	0.0
Incr Delay (d2), s/veh	9.6	1.7	5.6	14.6	7.6	15.9	3.0	5.9	0.0	34.4	4.4	0.0
Initial Q Delay(d3),s/veh	0.0	0.0	0.0	0.0	0.0	0.0	0.0	0.0	0.0	0.0	0.0	0.0
%ile Back of Q (50%), veh/ln	6.0	12.4	11.0	7.4	22.1	20.3	5.2	20.4	0.0	9.2	11.7	0.0
Lane Grp Delay (d), s/veh	74.3	37.6	41.4	83.2	56.4	65.7	59.1	46.3	0.0	95.0	33.9	0.0
Lane Grp LOS	E	D	D	F	E	E	E	D		F	C	
Approach Vol, veh/h		1875			1893			1968			1719	
Approach Delay, s/veh		43.9			63.3			48.1			47.8	
Approach LOS		D			E			D			D	

Timer												
Assigned Phs	1	6		5	2		7	4		3	8	
Phs Duration (G+Y+Rc), s	22.0	58.0		22.0	58.0		30.0	58.0		22.0	50.0	
Change Period (Y+Rc), s	6.0	6.0		6.0	6.0		6.0	6.0		6.0	6.0	
Max Green Setting (Gmax), s	16.0	52.0		16.0	52.0		24.0	52.0		16.0	44.0	
Max Q Clear Time (g_c+I1), s	14.6	29.4		16.7	46.1		13.6	45.5		19.9	31.9	
Green Ext Time (p_c), s	1.1	10.1		0.0	3.7		0.9	4.3		0.0	6.6	

Intersection Summary												
HCM 2010 Ctrl Delay			50.8									
HCM 2010 LOS			D									

Notes

HCM 2010 Signalized Intersection Summary
4289: Midway Rd & Beltway Dr

7/20/2015

Movement	EBL	EBT	EBR	WBL	WBT	WBR	NBL	NBT	NBR	SBL	SBT	SBR
Lane Configurations												
Volume (veh/h)	33	35	76	63	48	60	98	2087	96	51	1665	62
Number	3	8	18	7	4	14	1	6	16	5	2	12
Initial Q (Qb), veh	0	0	0	0	0	0	0	0	0	0	0	0
Ped-Bike Adj(A_pbT)	1.00		1.00	1.00		1.00	1.00		1.00	1.00		1.00
Parking Bus Adj	1.00	1.00	1.00	1.00	1.00	1.00	1.00	1.00	1.00	1.00	1.00	1.00
Adj Sat Flow veh/h/ln	186.3	193.7	186.3	186.3	193.7	190.0	186.3	186.3	186.3	186.3	193.7	186.3
Lanes	1	1	1	1	1	0	1	3	1	1	3	1
Cap, veh/h	221	214	175	305	100	129	287	3711	1052	220	3834	1045
Arrive On Green	0.06	0.11	0.11	0.08	0.13	0.12	0.05	0.66	0.66	0.10	1.00	1.00
Sat Flow, veh/h	1774	1937	1583	1774	766	995	1774	5588	1583	1774	5812	1583
Grp Volume(v), veh/h	59	51	95	95	0	154	100	2152	126	65	1982	77
Grp Sat Flow(s),veh/h/ln	1774	1937	1583	1774	0	1762	1774	1863	1583	1774	1937	1583
Q Serve(g_s), s	3.5	3.0	7.0	5.4	0.0	10.3	2.1	26.0	3.6	1.3	0.0	0.0
Cycle Q Clear(g_c), s	3.5	3.0	7.0	5.4	0.0	10.3	2.1	26.0	3.6	1.3	0.0	0.0
Prop In Lane	1.00		1.00	1.00		0.56	1.00		1.00	1.00		1.00
Lane Grp Cap(c), veh/h	221	214	175	305	0	229	287	3711	1052	220	3834	1045
V/C Ratio(X)	0.27	0.24	0.54	0.31	0.00	0.67	0.35	0.58	0.12	0.30	0.52	0.07
Avail Cap(c_a), veh/h	302	659	539	352	0	599	422	3711	1052	290	3834	1045
HCM Platoon Ratio	1.00	1.00	1.00	1.00	1.00	1.00	1.00	1.00	1.00	2.00	2.00	2.00
Upstream Filter(I)	1.00	1.00	1.00	1.00	0.00	1.00	1.00	1.00	1.00	1.00	1.00	1.00
Uniform Delay (d), s/veh	44.2	50.1	51.9	39.9	0.0	51.6	5.2	11.3	7.6	9.1	0.0	0.0
Incr Delay (d2), s/veh	0.6	0.6	2.6	0.6	0.0	3.4	0.7	0.7	0.2	0.7	0.5	0.1
Initial Q Delay(d3),s/veh	0.0	0.0	0.0	0.0	0.0	0.0	0.0	0.0	0.0	0.0	0.0	0.0
%ile Back of Q (50%), veh/ln	1.7	1.5	3.0	2.5	0.0	5.0	0.8	10.8	1.3	0.5	0.2	0.0
Lane Grp Delay (d), s/veh	44.9	50.7	54.5	40.4	0.0	55.0	5.9	12.0	7.8	9.9	0.5	0.1
Lane Grp LOS	D	D	D	D		E	A	B	A	A	A	A
Approach Vol, veh/h		205			249			2378			2124	
Approach Delay, s/veh		50.8			49.5			11.5			0.8	
Approach LOS		D			D			B			A	

Timer												
Assigned Phs	3	8		7	4		1	6		5	2	
Phs Duration (G+Y+Rc), s	10.3	16.7		12.7	19.1		9.6	85.0		9.1	84.5	
Change Period (Y+Rc), s	5.5	5.5		5.5	5.5		5.5	5.5		5.5	5.5	
Max Green Setting (Gmax), s	10.5	39.5		10.5	39.5		13.5	79.5		8.5	74.5	
Max Q Clear Time (g_c+I1), s	5.5	9.0		7.4	12.3		4.1	28.0		3.3	2.0	
Green Ext Time (p_c), s	0.0	1.3		0.1	1.2		0.2	44.2		0.1	58.7	

Intersection Summary												
HCM 2010 Ctrl Delay			10.4									
HCM 2010 LOS			B									

Notes

HCM 2010 Signalized Intersection Summary
4290: Midway Rd & Proton Dr

7/20/2015

Movement	EBL	EBT	EBR	WBL	WBT	WBR	NBL	NBT	NBR	SBL	SBT	SBR
Lane Configurations												
Volume (veh/h)	89	5	75	6	23	96	119	1964	8	43	1691	67
Number	3	8	18	7	4	14	1	6	16	5	2	12
Initial Q (Qb), veh	0	0	0	0	0	0	0	0	0	0	0	0
Ped-Bike Adj(A_pbT)	1.00		1.00	1.00		1.00	1.00		1.00	1.00		1.00
Parking Bus Adj	1.00	1.00	1.00	1.00	1.00	1.00	1.00	1.00	1.00	1.00	1.00	1.00
Adj Sat Flow veh/h/ln	186.3	193.7	190.0	190.0	186.3	186.3	186.3	186.3	190.0	186.3	186.3	190.0
Lanes	1	1	0	0	1	1	1	3	0	1	3	0
Cap, veh/h	310	44	312	51	164	163	250	3759	22	212	3559	146
Arrive On Green	0.09	0.21	0.21	0.10	0.10	0.10	0.05	0.68	0.67	0.06	0.89	0.87
Sat Flow, veh/h	1774	206	1472	189	1589	1583	1774	5550	33	1774	5331	219
Grp Volume(v), veh/h	113	0	106	42	0	104	123	1481	739	57	1475	726
Grp Sat Flow(s),veh/h/ln	1774	0	1678	1777	0	1583	1774	1863	1857	1774	1863	1824
Q Serve(g_s), s	7.3	0.0	7.2	0.0	0.0	8.6	2.7	28.9	29.0	1.3	12.7	13.0
Cycle Q Clear(g_c), s	7.3	0.0	7.2	2.8	0.0	8.6	2.7	28.9	29.0	1.3	12.7	13.0
Prop In Lane	1.00		0.88	0.19		1.00	1.00		0.02	1.00		0.12
Lane Grp Cap(c), veh/h	310	0	356	215	0	163	250	2523	1258	212	2487	1218
V/C Ratio(X)	0.36	0.00	0.30	0.20	0.00	0.64	0.49	0.59	0.59	0.27	0.59	0.60
Avail Cap(c_a), veh/h	351	0	593	417	0	350	350	2523	1258	277	2487	1218
HCM Platoon Ratio	1.00	1.00	1.00	1.00	1.00	1.00	1.00	1.00	1.00	1.33	1.33	1.33
Upstream Filter(I)	1.00	0.00	1.00	1.00	0.00	1.00	1.00	1.00	1.00	1.00	1.00	1.00
Uniform Delay (d), s/veh	46.0	0.0	45.0	55.9	0.0	58.5	7.8	11.7	11.8	9.8	3.2	3.3
Incr Delay (d2), s/veh	0.7	0.0	0.5	0.4	0.0	4.1	1.5	1.0	2.0	0.7	1.0	2.2
Initial Q Delay(d3),s/veh	0.0	0.0	0.0	0.0	0.0	0.0	0.0	0.0	0.0	0.0	0.0	0.0
%ile Back of Q (50%), veh/ln	3.4	0.0	3.2	1.4	0.0	3.7	1.1	12.3	12.6	0.5	3.3	3.6
Lane Grp Delay (d), s/veh	46.7	0.0	45.5	56.4	0.0	62.6	9.3	12.7	13.8	10.5	4.3	5.5
Lane Grp LOS	D		D	E		E	A	B	B	B	A	A
Approach Vol, veh/h		219			146			2343			2258	
Approach Delay, s/veh		46.1			60.8			12.9			4.8	
Approach LOS		D			E			B			A	
Timer												
Assigned Phs	3	8			4		1	6		5	2	
Phs Duration (G+Y+Rc), s	14.8	31.8			17.0		10.3	95.0		9.0	93.7	
Change Period (Y+Rc), s	5.5	5.5			5.5		5.5	5.5		5.5	5.5	
Max Green Setting (Gmax), s	12.5	45.5			27.5		12.5	89.5		8.5	85.5	
Max Q Clear Time (g_c+I1), s	9.3	9.2			10.6		4.7	31.0		3.3	15.0	
Green Ext Time (p_c), s	0.1	1.1			0.9		0.2	48.4		0.0	56.2	
Intersection Summary												
HCM 2010 Ctrl Delay			12.1									
HCM 2010 LOS			B									
Notes												

HCM 2010 Signalized Intersection Summary
4295: Runyon Rd & Beltline Rd

7/20/2015

Movement	EBL	EBT	EBR	WBL	WBT	WBR	NBL	NBT	NBR	SBL	SBT	SBR
Lane Configurations												
Volume (veh/h)	16	1693	29	43	1364	11	77	1	42	18	1	23
Number	1	6	16	5	2	12	7	4	14	3	8	18
Initial Q (Qb), veh	0	0	0	0	0	0	0	0	0	0	0	0
Ped-Bike Adj(A_pbT)	1.00		1.00	1.00		1.00	1.00		1.00	1.00		1.00
Parking Bus Adj	1.00	1.00	1.00	1.00	1.00	1.00	1.00	1.00	1.00	1.00	1.00	1.00
Adj Sat Flow veh/h/ln	186.3	186.3	186.3	186.3	186.3	190.0	186.3	186.3	190.0	186.3	186.3	190.0
Lanes	1	3	1	1	3	0	2	1	0	1	1	0
Cap, veh/h	363	4003	1134	326	3995	41	475	7	146	184	13	106
Arrive On Green	0.09	1.00	1.00	0.10	1.00	1.00	0.06	0.10	0.08	0.04	0.07	0.06
Sat Flow, veh/h	1774	5588	1583	1774	5522	56	3442	69	1525	1774	179	1431
Grp Volume(v), veh/h	36	1782	53	81	1058	526	115	0	93	33	0	36
Grp Sat Flow(s),veh/h/ln	1774	1863	1583	1774	1863	1853	1721	0	1594	1774	0	1610
Q Serve(g_s), s	0.6	0.0	0.0	1.4	0.0	0.0	3.6	0.0	7.1	2.1	0.0	2.7
Cycle Q Clear(g_c), s	0.6	0.0	0.0	1.4	0.0	0.0	3.6	0.0	7.1	2.1	0.0	2.7
Prop In Lane	1.00		1.00	1.00		0.03	1.00		0.96	1.00		0.89
Lane Grp Cap(c), veh/h	363	4003	1134	326	2695	1340	475	0	153	184	0	120
V/C Ratio(X)	0.10	0.45	0.05	0.25	0.39	0.39	0.24	0.00	0.61	0.18	0.00	0.30
Avail Cap(c_a), veh/h	429	4003	1134	379	2695	1340	529	0	457	278	0	487
HCM Platoon Ratio	2.00	2.00	2.00	2.00	2.00	2.00	1.00	1.00	1.00	1.00	1.00	1.00
Upstream Filter(I)	0.86	0.86	0.86	1.00	1.00	1.00	1.00	0.00	1.00	1.00	0.00	1.00
Uniform Delay (d), s/veh	3.6	0.0	0.0	3.2	0.0	0.0	44.6	0.0	55.2	50.0	0.0	55.7
Incr Delay (d2), s/veh	0.1	0.3	0.1	0.4	0.4	0.9	0.3	0.0	3.9	0.5	0.0	1.4
Initial Q Delay(d3),s/veh	0.0	0.0	0.0	0.0	0.0	0.0	0.0	0.0	0.0	0.0	0.0	0.0
%ile Back of Q (50%), veh/ln	0.2	0.1	0.0	0.4	0.2	0.3	1.6	0.0	3.1	1.0	0.0	1.2
Lane Grp Delay (d), s/veh	3.7	0.3	0.1	3.6	0.4	0.9	44.8	0.0	59.1	50.5	0.0	57.1
Lane Grp LOS	A	A	A	A	A	A	D		E	D		E
Approach Vol, veh/h		1871			1665			208			69	
Approach Delay, s/veh		0.4			0.7			51.2			53.9	
Approach LOS		A			A			D			D	
Timer												
Assigned Phs	1	6		5	2		7	4		3	8	
Phs Duration (G+Y+Rc), s	8.4	93.0		9.3	93.9		11.1	15.1		8.3	12.3	
Change Period (Y+Rc), s	5.5	5.5		5.5	5.5		5.5	5.5		5.5	5.5	
Max Green Setting (Gmax), s	7.5	87.5		7.5	87.5		7.5	33.5		9.5	35.5	
Max Q Clear Time (g_c+I1), s	2.6	2.0		3.4	2.0		5.6	9.1		4.1	4.7	
Green Ext Time (p_c), s	0.0	44.0		0.1	44.0		0.1	0.5		0.0	0.5	
Intersection Summary												
HCM 2010 Ctrl Delay			4.3									
HCM 2010 LOS			A									
Notes												

Lane Group	EBL	EBT	EBR	WBL	WBT	WBR	NBL	NBT	NBR	SBL	SBT	SBR
Lane Configurations												
Volume (vph)	113	1430	52	55	1383	45	79	127	96	63	132	158
Ideal Flow (vphpl)	1900	1900	1900	1900	1900	1900	1900	1900	1900	1900	1900	1900
Storage Length (ft)	150		0	200		0	100		140	100		120
Storage Lanes	1		0	1		0	1		1	1		0
Taper Length (ft)	25			25			25			25		
Lane Util. Factor	1.00	0.91	0.91	1.00	0.91	0.91	1.00	1.00	1.00	1.00	1.00	1.00
Frt		0.993			0.995				0.850			0.850
Flt Protected	0.950			0.950			0.950			0.950		
Satd. Flow (prot)	1770	5050	0	1770	5060	0	1770	1863	1583	1770	1863	1583
Flt Permitted	0.083			0.123			0.299			0.499		
Satd. Flow (perm)	155	5050	0	229	5060	0	557	1863	1583	930	1863	1583
Right Turn on Red			Yes			Yes			Yes			Yes
Satd. Flow (RTOR)		7			5				170			232
Link Speed (mph)		40			40			30			30	
Link Distance (ft)		907			950			997			322	
Travel Time (s)		15.5			16.2			22.7			7.3	
Peak Hour Factor	0.59	0.94	0.68	0.90	0.89	0.86	0.89	0.94	0.90	0.73	0.91	0.68
Adj. Flow (vph)	192	1521	76	61	1554	52	89	135	107	86	145	232
Shared Lane Traffic (%)												
Lane Group Flow (vph)	192	1597	0	61	1606	0	89	135	107	86	145	232
Enter Blocked Intersection	No	No	No	No	No	No	No	No	No	No	No	No
Lane Alignment	Left	Left	Right	Left	Left	Right	Left	Left	Right	Left	Left	Right
Median Width(ft)		12			12			12			12	
Link Offset(ft)		0			0			0			0	
Crosswalk Width(ft)		16			16			16			16	
Two way Left Turn Lane												
Headway Factor	1.00	1.00	1.00	1.00	1.00	1.00	1.00	1.00	1.00	1.00	1.00	1.00
Turning Speed (mph)	15		9	15		9	15		9	15		9
Number of Detectors	1	1		1	1		1	1	1	1	1	1
Detector Template												
Leading Detector (ft)	50	50		50	50		50	50	50	50	50	50
Trailing Detector (ft)	0	0		0	0		0	0	0	0	0	0
Detector 1 Position(ft)	0	0		0	0		0	0	0	0	0	0
Detector 1 Size(ft)	50	50		50	50		50	50	50	50	50	50
Detector 1 Type	Cl+Ex	Cl+Ex		Cl+Ex	Cl+Ex		Cl+Ex	Cl+Ex	Cl+Ex	Cl+Ex	Cl+Ex	Cl+Ex
Detector 1 Channel												
Detector 1 Extend (s)	0.0	0.0		0.0	0.0		0.0	0.0	0.0	0.0	0.0	0.0
Detector 1 Queue (s)	0.0	0.0		0.0	0.0		0.0	0.0	0.0	0.0	0.0	0.0
Detector 1 Delay (s)	0.0	0.0		0.0	0.0		0.0	0.0	0.0	0.0	0.0	0.0
Turn Type	pm+pt	NA		pm+pt	NA		custom	NA	Perm	pm+pt	NA	custom
Protected Phases	1	6 14		13	2 10		15	4 12		11	8 16	
Permitted Phases	6 14			2 10			4		4 12	8 16		8
Detector Phase	1	6 14		13	2 10		15	4 12	4 12	11	8 16	8
Switch Phase												
Minimum Initial (s)	4.0			4.0			4.0			4.0		4.0
Minimum Split (s)	13.0			13.0			13.0			13.0		16.0
Total Split (s)	16.0			16.0			13.0			13.0		20.0
Total Split (%)	10.0%			10.0%			8.1%			8.1%		12.5%

Lane Group	ø2	ø4	ø6	ø10	ø12	ø14	ø16
Lane Configurations							
Volume (vph)							
Ideal Flow (vphpl)							
Storage Length (ft)							
Storage Lanes							
Taper Length (ft)							
Lane Util. Factor							
Frt							
Flt Protected							
Satd. Flow (prot)							
Flt Permitted							
Satd. Flow (perm)							
Right Turn on Red							
Satd. Flow (RTOR)							
Link Speed (mph)							
Link Distance (ft)							
Travel Time (s)							
Peak Hour Factor							
Adj. Flow (vph)							
Shared Lane Traffic (%)							
Lane Group Flow (vph)							
Enter Blocked Intersection							
Lane Alignment							
Median Width(ft)							
Link Offset(ft)							
Crosswalk Width(ft)							
Two way Left Turn Lane							
Headway Factor							
Turning Speed (mph)							
Number of Detectors							
Detector Template							
Leading Detector (ft)							
Trailing Detector (ft)							
Detector 1 Position(ft)							
Detector 1 Size(ft)							
Detector 1 Type							
Detector 1 Channel							
Detector 1 Extend (s)							
Detector 1 Queue (s)							
Detector 1 Delay (s)							
Turn Type							
Protected Phases	2	4	6	10	12	14	16
Permitted Phases							
Detector Phase							
Switch Phase							
Minimum Initial (s)	4.0	4.0	4.0	4.0	4.0	4.0	4.0
Minimum Split (s)	29.5	16.0	24.5	22.0	22.0	22.0	22.0
Total Split (s)	35.0	20.0	51.0	56.0	20.0	40.0	20.0
Total Split (%)	22%	13%	32%	35%	13%	25%	13%

Lane Group	EBL	EBT	EBR	WBL	WBT	WBR	NBL	NBT	NBR	SBL	SBT	SBR
Maximum Green (s)	10.5			10.5			7.5			7.5		14.5
Yellow Time (s)	3.5			3.5			3.5			3.5		3.5
All-Red Time (s)	2.0			2.0			2.0			2.0		2.0
Lost Time Adjust (s)	-2.5			-2.5			-3.0			-2.5		-2.5
Total Lost Time (s)	3.0			3.0			2.5			3.0		3.0
Lead/Lag	Lead			Lead			Lead			Lead		
Lead-Lag Optimize?	Yes			Yes			Yes			Yes		
Vehicle Extension (s)	3.0			3.0			3.0			3.0		3.0
Recall Mode	None			None			None			None		None
Walk Time (s)												5.0
Flash Dont Walk (s)												2.0
Pedestrian Calls (#/hr)												0
Act Effct Green (s)	95.3	95.3		89.1	89.1		23.8	30.1	30.1	39.9	30.1	12.9
Actuated g/C Ratio	0.60	0.60		0.56	0.56		0.15	0.19	0.19	0.25	0.19	0.08
v/c Ratio	0.86	0.53		0.29	0.57		0.55	0.39	0.25	0.30	0.41	0.68
Control Delay	66.7	10.8		13.7	11.2		51.9	32.3	1.3	25.8	32.9	18.3
Queue Delay	0.0	0.0		0.0	0.0		0.0	0.0	0.0	0.0	0.0	0.0
Total Delay	66.7	10.8		13.7	11.2		51.9	32.3	1.3	25.8	32.9	18.3
LOS	E	B		B	B		D	C	A	C	C	B
Approach Delay		16.8			11.3			27.6			24.3	
Approach LOS		B			B			C			C	

Intersection Summary	
Area Type:	Other
Cycle Length: 160	
Actuated Cycle Length: 160	
Offset: 117 (73%), Referenced to phase 2:WBTL and 6:EBTL, Start of 1st Green	
Natural Cycle: 130	
Control Type: Actuated-Coordinated	
Maximum v/c Ratio: 0.86	
Intersection Signal Delay: 16.3	Intersection LOS: B
Intersection Capacity Utilization 58.6%	ICU Level of Service B
Analysis Period (min) 15	

Splits and Phases: 4296: Surveyor Blvd & Beltline Rd

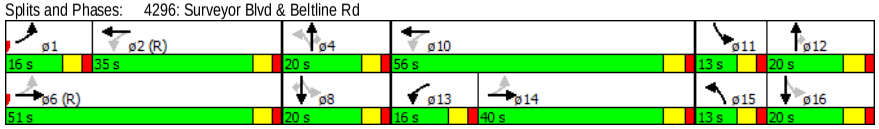

Lane Group	ø2	ø4	ø6	ø10	ø12	ø14	ø16
Maximum Green (s)	29.5	14.5	45.5	50.0	14.0	34.0	14.0
Yellow Time (s)	3.5	3.5	3.5	4.0	4.0	4.0	4.0
All-Red Time (s)	2.0	2.0	2.0	2.0	2.0	2.0	2.0
Lost Time Adjust (s)							
Total Lost Time (s)							
Lead/Lag	Lag				Lag	Lag	Lag
Lead-Lag Optimize?	Yes						
Vehicle Extension (s)	3.0	3.0	3.0	3.0	3.0	3.0	3.0
Recall Mode	C-Max	Min	C-Max	Max	Min	None	Max
Walk Time (s)	5.0	5.0	5.0	5.0	5.0	5.0	5.0
Flash Dont Walk (s)	19.0	24.0	14.0	11.0	11.0	11.0	11.0
Pedestrian Calls (#/hr)	0	0	0	0	0	0	0
Act Effct Green (s)							
Actuated g/C Ratio							
v/c Ratio							
Control Delay							
Queue Delay							
Total Delay							
LOS							
Approach Delay							
Approach LOS							

Intersection Summary

HCM 2010 TWSC
2: Northeast Drive & Beltline Rd

7/20/2015

Intersection	
Intersection Delay, s/veh	0.2

Movement	EBT	EBR	WBL	WBT	NBL	NBR
Vol, veh/h	1671	10	0	0	0	16
Conflicting Peds, #/hr	0	0	0	0	0	0
Sign Control	Free	Free	Free	Free	Stop	Stop
RT Channelized	-	None	-	None	-	None
Storage Length	-	140	-	-	-	0
Veh in Median Storage, #	0	-	-	0	0	-
Grade, %	0	-	-	0	0	-
Peak Hour Factor	92	92	92	92	92	92
Heavy Vehicles, %	2	2	2	2	2	2
Mvmt Flow	1816	11	0	0	0	17

Major/Minor	Major1		Major2		Minor1	
Conflicting Flow All	0	0	1816	0	1816	908
Stage 1	-	-	-	-	1816	-
Stage 2	-	-	-	-	0	-
Follow-up Headway	-	-	3.12	-	3.82	3.92
Pot Capacity-1 Maneuver	-	-	155	-	117	239
Stage 1	-	-	-	-	75	-
Stage 2	-	-	-	-	-	-
Time blocked-Platoon, %	-	-		-		
Mov Capacity-1 Maneuver	-	-	155	-	117	239
Mov Capacity-2 Maneuver	-	-	-	-	117	-
Stage 1	-	-	-	-	75	-
Stage 2	-	-	-	-	-	-

Approach	EB	WB	NB
HCM Control Delay, s	0	0	21.2
HCM LOS			C

Minor Lane / Major Mvmt	NBLn1	EBT	EBR	WBL	WBT
Capacity (veh/h)	239	-	-	155	-
HCM Lane V/C Ratio	0.073	-	-	-	-
HCM Control Delay (s)	21.2	-	-	0	-
HCM Lane LOS	C			A	
HCM 95th %tile Q(veh)	0.233	-	-	0	-

Notes

~ : Volume Exceeds Capacity; $: Delay Exceeds 300 Seconds; Error : Computation Not Defined

HCM 2010 TWSC
4: Midway Rd & East Drive

7/20/2015

Intersection	
Intersection Delay, s/veh	0.4

Movement	EBL	EBR	NBL	NBT	SBT	SBR
Vol, veh/h	1	15	24	2141	1812	7
Conflicting Peds, #/hr	0	0	0	0	0	0
Sign Control	Stop	Stop	Free	Free	Free	Free
RT Channelized	-	None	-	None	-	None
Storage Length	0	-	125	-	-	-
Veh in Median Storage, #	0	-	-	0	0	-
Grade, %	0	-	-	0	0	-
Peak Hour Factor	92	92	92	92	92	92
Heavy Vehicles, %	2	2	2	2	2	2
Mvmt Flow	1	16	26	2327	1970	8

Major/Minor	Minor2		Major1		Major2	
Conflicting Flow All	2987	989	1977	0	-	0
Stage 1	2004	-	-	-	-	-
Stage 2	983	-	-	-	-	-
Follow-up Headway	3.82	3.92	3.12	-	-	-
Pot Capacity-1 Maneuver	27	211	128	-	-	-
Stage 1	56	-	-	-	-	-
Stage 2	292	-	-	-	-	-
Time blocked-Platoon, %				-	-	-
Mov Capacity-1 Maneuver	22	211	128	-	-	-
Mov Capacity-2 Maneuver	22	-	-	-	-	-
Stage 1	56	-	-	-	-	-
Stage 2	233	-	-	-	-	-

Approach	EB	NB	SB
HCM Control Delay, s	35.1	0.4	0
HCM LOS	E		

Minor Lane / Major Mvmt	NBL	NBT	EBLn1	SBU	SBT	SBR
Capacity (veh/h)	128	-	137	-	-	-
HCM Lane V/C Ratio	0.204	-	0.127	-	-	-
HCM Control Delay (s)	40.185	-	35.1	-	-	-
HCM Lane LOS	E		E			
HCM 95th %tile Q(veh)	0.726	-	0.424	-	-	-

Notes

~ : Volume Exceeds Capacity; $: Delay Exceeds 300 Seconds; Error : Computation Not Defined

Intersection	
Intersection Delay, s/veh	28.4

Movement	EBL	EBT	EBR	WBL	WBT	WBR	NBL	NBT	NBR	SBL	SBT	SBR
Vol, veh/h	1	0	4	12	0	104	18	2427	29	30	1732	8
Conflicting Peds, #/hr	0	0	0	0	0	0	0	0	0	0	0	0
Sign Control	Stop	Stop	Stop	Stop	Stop	Stop	Free	Free	Free	Free	Free	Free
RT Channelized	-	-	None	-	-	None	-	-	None	-	-	None
Storage Length	-	-	-	-	-	0	130	-	-	125	-	-
Veh in Median Storage, #	-	0	-	-	0	-	-	0	-	-	0	-
Grade, %	-	0	-	-	0	-	-	0	-	-	0	-
Peak Hour Factor	92	92	92	92	92	92	92	92	92	92	92	92
Heavy Vehicles, %	2	2	2	2	2	2	2	2	2	2	2	2
Mvmt Flow	1	0	4	13	0	113	20	2638	32	33	1883	9

Major/Minor	Minor2			Minor1			Major1			Major2		
Conflicting Flow All	3046	4661	946	3511	4650	1335	1891	0	0	2670	0	0
Stage 1	1952	1952	-	2693	2693	-	-	-	-	-	-	-
Stage 2	1094	2709	-	818	1957	-	-	-	-	-	-	-
Follow-up Headway	3.82	4.02	3.92	3.82	4.02	3.92	3.12	-	-	3.12	-	-
Pot Capacity-1 Maneuver	14	1	225	# 7	1	123	142	-	-	56	-	-
Stage 1	42	109	-	# 12	45	-	-	-	-	-	-	-
Stage 2	205	44	-	305	109	-	-	-	-	-	-	-
Time blocked-Platoon, %								-	-		-	-
Mov Capacity-1 Maneuver	# 1	0	225	# 3	0	123	142	-	-	56	-	-
Mov Capacity-2 Maneuver	# 1	0	-	# 3	0	-	-	-	-	-	-	-
Stage 1	36	45	-	# 10	39	-	-	-	-	-	-	-
Stage 2	14	38	-	123	45	-	-	-	-	-	-	-

Approach	EB	WB	NB	SB
HCM Control Delay, s	$ 1338.3	$ 969.3	0.3	2.3
HCM LOS	F	F		

Minor Lane / Major Mvmt	NBL	NBT	NBR	EBLn1	WBLn1	WBLn2	SBL	SBT	SBR
Capacity (veh/h)	142	-	-	5	11	123	56	-	-
HCM Lane V/C Ratio	0.138	-	-	1.087	4.611	0.613	0.582	-	-
HCM Control Delay (s)	34.362	-	-	$ 1338.3	$ 2302.1	72.3	135.546	-	-
HCM Lane LOS	D			F	F	F	F		
HCM 95th %tile Q(veh)	0.465	-	-	1.455	7.501	3.116	2.328	-	-

Notes

~ : Volume Exceeds Capacity; $: Delay Exceeds 300 Seconds; Error : Computation Not Defined

Intersection	
Intersection Delay, s/veh	-

Movement	EBL	EBT	WBT	WBR	SBL	SBR
Vol, veh/h	0	0	0	0	0	0
Conflicting Peds, #/hr	0	0	0	0	0	0
Sign Control	Free	Free	Free	Free	Stop	Stop
RT Channelized	-	None	-	None	-	None
Storage Length	-	-	-	-	0	-
Veh in Median Storage, #	-	0	0	-	0	-
Grade, %	-	0	0	-	0	-
Peak Hour Factor	92	92	92	92	92	92
Heavy Vehicles, %	2	2	2	2	2	2
Mvmt Flow	0	0	0	0	0	0

Major/Minor	Major1		Major2		Minor2	
Conflicting Flow All	0	0	-	0	0	0
Stage 1	-	-	-	-	0	-
Stage 2	-	-	-	-	0	-
Follow-up Headway	2.218	-	-	-	3.518	3.318
Pot Capacity-1 Maneuver	-	-	-	-	-	-
Stage 1	-	-	-	-	-	-
Stage 2	-	-	-	-	-	-
Time blocked-Platoon, %		-	-	-		
Mov Capacity-1 Maneuver	-	-	-	-	-	-
Mov Capacity-2 Maneuver	-	-	-	-	-	-
Stage 1	-	-	-	-	-	-
Stage 2	-	-	-	-	-	-

Approach	EB	WB	SB
HCM Control Delay, s	0	0	0
HCM LOS			A

Minor Lane / Major Mvmt	EBL	EBT	WBT	WBR	SBLn1
Capacity (veh/h)	-	-	-	-	+
HCM Lane V/C Ratio	-	-	-	-	+
HCM Control Delay (s)	0	-	-	-	0
HCM Lane LOS	A				A
HCM 95th %tile Q(veh)	-	-	-	-	+

Notes

~ : Volume Exceeds Capacity; $: Delay Exceeds 300 Seconds; Error : Computation Not Defined

Two Way Analysis cannot be performed on an All Way Stop Intersection.

Intersection	
Intersection Delay, s/veh	1.4

Movement	EBL	EBT	EBR	WBL	WBT	WBR	NBL	NBT	NBR	SBL	SBT	SBR
Vol, veh/h	29	1637	27	58	1409	6	0	0	45	0	0	17
Conflicting Peds, #/hr	0	0	0	0	0	0	0	0	0	0	0	0
Sign Control	Free	Free	Free	Free	Free	Free	Stop	Stop	Stop	Stop	Stop	Stop
RT Channelized	-	-	None	-	-	None	-	-	None	-	-	None
Storage Length	160	-	160	175	-	-	-	-	0	-	-	0
Veh in Median Storage, #	-	0	-	-	0	-	-	0	-	-	0	-
Grade, %	-	0	-	-	0	-	-	0	-	-	0	-
Peak Hour Factor	92	92	92	92	92	92	92	92	92	92	92	92
Heavy Vehicles, %	2	2	2	2	2	2	2	2	2	2	2	2
Mvmt Flow	32	1779	29	63	1532	7	0	0	49	0	0	18

Major/Minor	Major1			Major2			Minor1			Minor2		
Conflicting Flow All	1538	0	0	1779	0	0	2581	3506	890	2436	3503	769
Stage 1	-	-	-	-	-	-	1842	1842	-	1661	1661	-
Stage 2	-	-	-	-	-	-	739	1664	-	775	1842	-
Follow-up Headway	3.12	-	-	3.12	-	-	3.82	4.02	3.92	3.82	4.02	3.92
Pot Capacity-1 Maneuver	213	-	-	162	-	-	27	6	245	34	6	295
Stage 1	-	-	-	-	-	-	50	124	-	68	153	-
Stage 2	-	-	-	-	-	-	341	152	-	324	124	-
Time blocked-Platoon, %		-	-		-	-						
Mov Capacity-1 Maneuver	213	-	-	162	-	-	16	3	245	17	3	295
Mov Capacity-2 Maneuver	-	-	-	-	-	-	16	3	-	17	3	-
Stage 1	-	-	-	-	-	-	42	105	-	58	94	-
Stage 2	-	-	-	-	-	-	195	93	-	220	105	-

Approach	EB	WB	NB	SB
HCM Control Delay, s	0.4	1.6	23.3	18
HCM LOS			C	C

Minor Lane / Major Mvmt	NBLn1	EBL	EBT	EBR	WBL	WBT	WBR	SBLn1
Capacity (veh/h)	245	213	-	-	162	-	-	295
HCM Lane V/C Ratio	0.2	0.148	-	-	0.389	-	-	0.063
HCM Control Delay (s)	23.3	24.815	-	-	40.717	-	-	18
HCM Lane LOS	C	C			E			C
HCM 95th %tile Q(veh)	0.727	0.51	-	-	1.682	-	-	0.199

Notes

~ : Volume Exceeds Capacity; $: Delay Exceeds 300 Seconds; Error : Computation Not Defined

Intersection	
Intersection Delay, s/veh	10
Intersection LOS	A

Movement	EBL	EBT	EBR	WBL	WBT	WBR	NBL	NBT	NBR	SBL	SBT	SBR
Vol, veh/h	8	7	3	48	15	183	2	113	78	97	113	11
Peak Hour Factor	0.92	0.92	0.92	0.92	0.92	0.92	0.92	0.92	0.92	0.92	0.92	0.92
Heavy Vehicles, %	2	2	2	2	2	2	2	2	2	2	2	2
Mvmt Flow	9	8	3	52	16	199	2	123	85	105	123	12
Number of Lanes	0	1	0	0	1	0	0	1	0	0	1	0

Approach	EB	WB	NB	SB
Opposing Approach	WB	EB	SB	NB
Opposing Lanes	1	1	1	1
Conflicting Approach Left	SB	NB	EB	WB
Conflicting Lanes Left	1	1	1	1
Conflicting Approach Right	NB	SB	WB	EB
Conflicting Lanes Right	1	1	1	1
HCM Control Delay	8.6	10.1	9.5	10.4
HCM LOS	A	B	A	B

Lane	NBLn1	EBLn1	WBLn1	SBLn1
Vol Left, %	1%	44%	20%	44%
Vol Thru, %	59%	39%	6%	51%
Vol Right, %	40%	17%	74%	5%
Sign Control	Stop	Stop	Stop	Stop
Traffic Vol by Lane	193	18	246	221
LT Vol	113	7	15	113
Through Vol	78	3	183	11
RT Vol	2	8	48	97
Lane Flow Rate	210	20	267	240
Geometry Grp	1	1	1	1
Degree of Util (X)	0.272	0.029	0.342	0.328
Departure Headway (Hd)	4.672	5.348	4.611	4.919
Convergence, Y/N	Yes	Yes	Yes	Yes
Cap	762	662	775	725
Service Time	2.741	3.441	2.671	2.986
HCM Lane V/C Ratio	0.276	0.03	0.345	0.331
HCM Control Delay	9.5	8.6	10.1	10.4
HCM Lane LOS	A	A	B	B
HCM 95th-tile Q	1.1	0.1	1.5	1.4

Notes

~ : Volume Exceeds Capacity; $: Delay Exceeds 300 Seconds; Error : Computation Not Defined

Synchro^{TM} Output - 2017 Background Plus Site Traffic

HCM 2010 Signalized Intersection Summary
4278: Midway Rd & Lindbergh Dr

7/20/2015

Movement	EBL	EBT	EBR	WBL	WBT	WBR	NBL	NBT	NBR	SBL	SBT	SBR
Lane Configurations												
Volume (veh/h)	18	10	7	19	18	163	41	1127	50	217	2451	59
Number	3	8	18	7	4	14	1	6	16	5	2	12
Initial Q (Qb), veh	0	0	0	0	0	0	0	0	0	0	0	0
Ped-Bike Adj(A_pbT)	1.00		1.00	1.00		1.00	1.00		1.00	1.00		1.00
Parking Bus Adj	1.00	1.00	1.00	1.00	1.00	1.00	1.00	1.00	1.00	1.00	1.00	1.00
Adj Sat Flow veh/h/ln	186.3	186.3	190.0	186.3	193.7	186.3	186.3	186.3	190.0	186.3	186.3	190.0
Lanes	1	1	0	1	1	1	1	3	0	1	3	0
Cap, veh/h	289	153	120	320	308	252	149	3353	160	486	3652	87
Arrive On Green	0.04	0.16	0.15	0.04	0.16	0.16	0.09	1.00	1.00	0.08	0.67	0.66
Sat Flow, veh/h	1774	968	761	1774	1937	1583	1774	5291	252	1774	5435	130
Grp Volume(v), veh/h	26	0	25	29	24	199	63	826	404	286	2092	1046
Grp Sat Flow(s),veh/h/ln	1774	0	1729	1774	1937	1583	1774	1863	1818	1774	1863	1840
Q Serve(g_s), s	1.6	0.0	1.7	1.8	1.4	16.6	1.6	0.0	0.0	6.1	57.5	59.2
Cycle Q Clear(g_c), s	1.6	0.0	1.7	1.8	1.4	16.6	1.6	0.0	0.0	6.1	57.5	59.2
Prop In Lane	1.00		0.44	1.00		1.00	1.00		0.14	1.00		0.07
Lane Grp Cap(c), veh/h	289	0	273	320	308	252	149	2361	1152	486	2503	1236
V/C Ratio(X)	0.09	0.00	0.09	0.09	0.08	0.79	0.42	0.35	0.35	0.59	0.84	0.85
Avail Cap(c_a), veh/h	353	0	391	383	439	359	263	2361	1152	624	2503	1236
HCM Platoon Ratio	1.00	1.00	1.00	1.00	1.00	1.00	2.00	2.00	2.00	1.00	1.00	1.00
Upstream Filter(I)	1.00	0.00	1.00	1.00	1.00	1.00	1.00	1.00	1.00	1.00	1.00	1.00
Uniform Delay (d), s/veh	45.1	0.0	49.6	44.9	49.0	55.4	28.9	0.0	0.0	4.9	16.8	17.1
Incr Delay (d2), s/veh	0.1	0.0	0.1	0.1	0.1	7.6	1.9	0.4	0.8	1.1	3.5	7.2
Initial Q Delay(d3),s/veh	0.0	0.0	0.0	0.0	0.0	0.0	0.0	0.0	0.0	0.0	0.0	0.0
%ile Back of Q (50%), veh/ln	0.8	0.0	0.8	0.8	0.7	7.3	2.1	0.1	0.3	2.2	25.0	26.6
Lane Grp Delay (d), s/veh	45.2	0.0	49.7	45.0	49.1	62.9	30.8	0.4	0.8	6.0	20.3	24.4
Lane Grp LOS	D		D	D	D	E	C	A	A	A	C	C
Approach Vol, veh/h		51			252			1293			3424	
Approach Delay, s/veh		47.4			59.6			2.0			20.3	
Approach LOS		D			E			A			C	

Timer												
Assigned Phs	3	8		7	4		1	6		5	2	
Phs Duration (G+Y+Rc), s	8.0	24.6		8.2	24.8		9.1	89.8		14.4	95.0	
Change Period (Y+Rc), s	5.5	5.5		5.5	5.5		5.5	5.5		5.5	5.5	
Max Green Setting (Gmax), s	7.5	28.5		7.5	28.5		12.5	82.5		19.5	89.5	
Max Q Clear Time (g_c+I1), s	3.6	3.7		3.8	18.6		3.6	2.0		8.1	61.2	
Green Ext Time (p_c), s	0.0	1.0		0.0	0.7		0.1	65.1		0.8	26.1	

Intersection Summary												
HCM 2010 Ctrl Delay			17.9									
HCM 2010 LOS			B									

Notes

HCM 2010 Signalized Intersection Summary
4287: Beltway Dr & Beltline Rd

7/20/2015

Movement	EBU	EBT	EBR	WBL	WBT	NBL	NBR
Lane Configurations							
Volume (veh/h)	2	1811	19	108	1553	8	73
Number		6	16	5	2	7	14
Initial Q (Qb), veh		0	0	0	0	0	0
Ped-Bike Adj(A_pbT)			1.00	1.00		1.00	1.00
Parking Bus Adj		1.00	1.00	1.00	1.00	1.00	1.00
Adj Sat Flow veh/h/ln		186.3	190.0	186.3	186.3	186.3	186.3
Lanes		3	0	1	3	1	2
Cap, veh/h		4401	59	197	4981	111	198
Arrive On Green		0.80	0.79	0.07	0.89	0.06	0.06
Sat Flow, veh/h		5502	74	1774	5588	1774	3167
Grp Volume(v), veh/h		1264	628	138	1601	13	86
Grp Sat Flow(s),veh/h/ln		1863	1850	1774	1863	1774	1583
Q Serve(g_s), s		13.4	13.4	4.2	5.7	0.9	3.4
Cycle Q Clear(g_c), s		13.4	13.4	4.2	5.7	0.9	3.4
Prop In Lane			0.04	1.00		1.00	1.00
Lane Grp Cap(c), veh/h		2980	1480	197	4981	111	198
V/C Ratio(X)		0.42	0.42	0.70	0.32	0.12	0.43
Avail Cap(c_a), veh/h		2980	1480	280	4981	437	779
HCM Platoon Ratio		1.00	1.00	1.00	1.00	1.00	1.00
Upstream Filter(I)		1.00	1.00	1.00	1.00	1.00	1.00
Uniform Delay (d), s/veh		3.9	4.0	53.6	1.1	57.6	58.7
Incr Delay (d2), s/veh		0.4	0.9	4.5	0.2	0.5	1.5
Initial Q Delay(d3),s/veh		0.0	0.0	0.0	0.0	0.0	0.0
%ile Back of Q (50%), veh/ln		4.9	5.1	4.8	1.3	0.4	0.0
Lane Grp Delay (d), s/veh		4.4	4.8	58.1	1.2	58.0	60.2
Lane Grp LOS		A	A	E	A	E	E
Approach Vol, veh/h		1892			1739	99	
Approach Delay, s/veh		4.5			5.8	59.9	
Approach LOS		A			A	E	

Timer							
Assigned Phs		6		5	2		
Phs Duration (G+Y+Rc), s		107.0		11.9	118.9		
Change Period (Y+Rc), s		5.5		5.5	5.5		
Max Green Setting (Gmax), s		101.5		12.5	106.5		
Max Q Clear Time (g_c+I1), s		15.4		6.2	7.7		
Green Ext Time (p_c), s		46.1		0.2	49.0		

Intersection Summary							
HCM 2010 Ctrl Delay			6.6				
HCM 2010 LOS			A				

Notes

HCM 2010 Signalized Intersection Summary
4288: Midway Rd & Beltline Rd

7/20/2015

Movement	EBL	EBT	EBR	WBL	WBT	WBR	NBL	NBT	NBR	SBL	SBT	SBR
Lane Configurations												
Volume (veh/h)	158	1054	333	314	841	340	145	639	251	493	1761	149
Number	1	6	16	5	2	12	7	4	14	3	8	18
Initial Q (Qb), veh	0	0	0	0	0	0	0	0	0	0	0	0
Ped-Bike Adj(A_pbT)	1.00		1.00	1.00		1.00	1.00		1.00	1.00		1.00
Parking Bus Adj	1.00	1.00	1.00	1.00	1.00	1.00	1.00	1.00	1.00	1.00	1.00	1.00
Adj Sat Flow veh/h/ln	186.3	186.3	186.3	186.3	186.3	190.0	186.3	186.3	186.3	186.3	186.3	186.3
Lanes	2	3	1	2	3	0	2	3	1	2	3	1
Cap, veh/h	258	1502	426	559	1335	557	258	1886	534	538	2340	663
Arrive On Green	0.15	0.54	0.54	0.16	0.36	0.34	0.15	0.68	0.00	0.31	0.84	0.00
Sat Flow, veh/h	3442	5588	1583	3442	3749	1564	3442	5588	1583	3442	5588	1583
Grp Volume(v), veh/h	268	1109	422	320	908	388	167	702	0	524	2072	0
Grp Sat Flow(s),veh/h/ln	1721	1863	1583	1721	1863	1587	1721	1863	1583	1721	1863	1583
Q Serve(g_s), s	12.0	24.4	42.2	13.7	33.2	33.6	7.3	8.7	0.0	24.1	37.3	0.0
Cycle Q Clear(g_c), s	12.0	24.4	42.2	13.7	33.2	33.6	7.3	8.7	0.0	24.1	37.3	0.0
Prop In Lane	1.00		1.00	1.00		0.99	1.00		1.00	1.00		1.00
Lane Grp Cap(c), veh/h	258	1502	426	559	1327	565	258	1886	534	538	2340	663
V/C Ratio(X)	1.04	0.74	0.99	0.57	0.68	0.69	0.65	0.37	0.00	0.97	0.89	0.00
Avail Cap(c_a), veh/h	258	1502	426	559	1327	565	258	1886	534	538	2340	663
HCM Platoon Ratio	2.00	2.00	2.00	1.00	1.00	1.00	2.00	2.00	2.00	2.00	2.00	2.00
Upstream Filter(I)	1.00	1.00	1.00	1.00	1.00	1.00	1.00	1.00	0.00	1.00	1.00	0.00
Uniform Delay (d), s/veh	68.0	32.7	36.8	61.9	43.8	44.8	66.0	18.6	0.0	54.7	10.6	0.0
Incr Delay (d2), s/veh	66.3	3.3	41.6	4.2	2.9	6.6	11.9	0.6	0.0	33.0	5.4	0.0
Initial Q Delay(d3),s/veh	0.0	0.0	0.0	0.0	0.0	0.0	0.0	0.0	0.0	0.0	0.0	0.0
%ile Back of Q (50%), veh/ln	7.3	9.9	18.8	6.4	16.2	14.5	3.5	3.4	0.0	12.1	6.9	0.0
Lane Grp Delay (d), s/veh	134.3	36.0	78.5	66.1	46.7	51.4	77.9	19.2	0.0	87.7	16.0	0.0
Lane Grp LOS	F	D	E	E	D	D	E	B		F	B	
Approach Vol, veh/h		1799			1616			869			2596	
Approach Delay, s/veh		60.6			51.7			30.5			30.4	
Approach LOS		E			D			C			C	

Timer												
Assigned Phs	1	6		5	2		7	4		3	8	
Phs Duration (G+Y+Rc), s	15.0	46.0		29.0	60.0		15.0	57.0		28.0	70.0	
Change Period (Y+Rc), s	6.0	6.0		6.0	6.0		6.0	6.0		6.0	6.0	
Max Green Setting (Gmax), s	9.0	40.0		23.0	54.0		9.0	51.0		22.0	64.0	
Max Q Clear Time (g_c+I1), s	14.0	44.2		15.7	35.6		9.3	10.7		26.1	39.3	
Green Ext Time (p_c), s	0.0	0.0		0.8	6.1		0.0	3.5		0.0	16.2	

Intersection Summary												
HCM 2010 Ctrl Delay			43.3									
HCM 2010 LOS			D									

Notes

HCM 2010 Signalized Intersection Summary
4289: Midway Rd & Beltway Dr

7/20/2015

Movement	EBL	EBT	EBR	WBL	WBT	WBR	NBL	NBT	NBR	SBL	SBT	SBR
Lane Configurations												
Volume (veh/h)	56	38	121	34	9	49	57	952	30	43	2269	39
Number	3	8	18	7	4	14	1	6	16	5	2	12
Initial Q (Qb), veh	0	0	0	0	0	0	0	0	0	0	0	0
Ped-Bike Adj(A_pbT)	1.00		1.00	1.00		1.00	1.00		1.00	1.00		1.00
Parking Bus Adj	1.00	1.00	1.00	1.00	1.00	1.00	1.00	1.00	1.00	1.00	1.00	1.00
Adj Sat Flow veh/h/ln	186.3	193.7	186.3	186.3	193.7	190.0	186.3	186.3	186.3	186.3	193.7	186.3
Lanes	1	1	1	1	1	0	1	3	1	1	3	1
Cap, veh/h	283	264	216	284	27	160	209	3727	1056	507	3874	1055
Arrive On Green	0.08	0.14	0.14	0.05	0.11	0.10	0.09	1.00	1.00	0.09	1.00	1.00
Sat Flow, veh/h	1774	1937	1583	1774	243	1440	1774	5588	1583	1774	5812	1583
Grp Volume(v), veh/h	100	55	151	52	0	83	58	981	39	55	2701	48
Grp Sat Flow(s),veh/h/ln	1774	1937	1583	1774	0	1683	1774	1863	1583	1774	1937	1583
Q Serve(g_s), s	5.8	3.2	11.5	3.2	0.0	5.9	1.2	0.0	0.0	1.1	0.0	0.0
Cycle Q Clear(g_c), s	5.8	3.2	11.5	3.2	0.0	5.9	1.2	0.0	0.0	1.1	0.0	0.0
Prop In Lane	1.00		1.00	1.00		0.86	1.00		1.00	1.00		1.00
Lane Grp Cap(c), veh/h	283	264	216	284	0	187	209	3727	1056	507	3874	1055
V/C Ratio(X)	0.35	0.21	0.70	0.18	0.00	0.44	0.28	0.26	0.04	0.11	0.70	0.05
Avail Cap(c_a), veh/h	310	646	528	356	0	561	266	3727	1056	565	3874	1055
HCM Platoon Ratio	1.00	1.00	1.00	1.00	1.00	1.00	2.00	2.00	2.00	2.00	2.00	2.00
Upstream Filter(I)	1.00	1.00	1.00	1.00	0.00	1.00	1.00	1.00	1.00	1.00	1.00	1.00
Uniform Delay (d), s/veh	39.9	48.4	52.0	45.2	0.0	53.0	5.0	0.0	0.0	5.1	0.0	0.0
Incr Delay (d2), s/veh	0.7	0.4	4.1	0.3	0.0	1.7	0.7	0.2	0.1	0.1	1.1	0.1
Initial Q Delay(d3),s/veh	0.0	0.0	0.0	0.0	0.0	0.0	0.0	0.0	0.0	0.0	0.0	0.0
%ile Back of Q (50%), veh/ln	2.7	1.6	4.9	1.5	0.0	2.7	0.5	0.1	0.0	0.4	0.4	0.0
Lane Grp Delay (d), s/veh	40.6	48.8	56.0	45.5	0.0	54.7	5.8	0.2	0.1	5.2	1.1	0.1
Lane Grp LOS	D	D	E	D		D	A	A	A	A	A	A
Approach Vol, veh/h		306			135			1078			2804	
Approach Delay, s/veh		49.7			51.2			0.5			1.1	
Approach LOS		D			D			A			A	

Timer												
Assigned Phs	3	8		7	4		1	6		5	2	
Phs Duration (G+Y+Rc), s	13.1	20.2		9.9	17.0		9.0	87.1		8.9	87.0	
Change Period (Y+Rc), s	5.5	5.5		5.5	5.5		5.5	5.5		5.5	5.5	
Max Green Setting (Gmax), s	9.5	39.5		9.5	39.5		7.5	81.5		7.5	81.5	
Max Q Clear Time (g_c+I1), s	7.8	13.5		5.2	7.9		3.2	2.0		3.1	2.0	
Green Ext Time (p_c), s	0.0	1.2		0.0	1.3		0.0	56.3		0.0	56.3	

Intersection Summary												
HCM 2010 Ctrl Delay			6.0									
HCM 2010 LOS			A									

Notes

HCM 2010 Signalized Intersection Summary
4290: Midway Rd & Proton Dr

7/20/2015

Movement	EBL	EBT	EBR	WBL	WBT	WBR	NBL	NBT	NBR	SBL	SBT	SBR
Lane Configurations												
Volume (veh/h)	73	25	162	3	7	29	35	1012	11	214	2045	77
Number	3	8	18	7	4	14	1	6	16	5	2	12
Initial Q (Qb), veh	0	0	0	0	0	0	0	0	0	0	0	0
Ped-Bike Adj(A_pbT)	1.00		1.00	1.00		1.00	1.00		1.00	1.00		1.00
Parking Bus Adj	1.00	1.00	1.00	1.00	1.00	1.00	1.00	1.00	1.00	1.00	1.00	1.00
Adj Sat Flow veh/h/ln	186.3	193.7	190.0	190.0	186.3	186.3	186.3	186.3	190.0	186.3	186.3	190.0
Lanes	1	1	0	0	1	1	1	3	0	1	3	0
Cap, veh/h	252	82	248	55	111	147	201	3597	54	477	3729	145
Arrive On Green	0.08	0.19	0.19	0.09	0.09	0.09	0.04	0.65	0.64	0.17	1.00	1.00
Sat Flow, veh/h	1774	424	1286	212	1195	1583	1774	5492	82	1774	5345	207
Grp Volume(v), veh/h	92	0	266	14	0	32	36	771	383	285	1775	881
Grp Sat Flow(s),veh/h/ln	1774	0	1710	1407	0	1583	1774	1863	1848	1774	1863	1826
Q Serve(g_s), s	5.9	0.0	19.6	0.0	0.0	2.5	0.8	11.9	11.9	5.8	0.0	0.0
Cycle Q Clear(g_c), s	5.9	0.0	19.6	6.4	0.0	2.5	0.8	11.9	11.9	5.8	0.0	0.0
Prop In Lane	1.00		0.75	0.29		1.00	1.00		0.04	1.00		0.11
Lane Grp Cap(c), veh/h	252	0	330	166	0	147	201	2440	1210	477	2599	1274
V/C Ratio(X)	0.37	0.00	0.81	0.08	0.00	0.22	0.18	0.32	0.32	0.60	0.68	0.69
Avail Cap(c_a), veh/h	316	0	623	376	0	360	276	2440	1210	624	2599	1274
HCM Platoon Ratio	1.00	1.00	1.00	1.00	1.00	1.00	1.00	1.00	1.00	2.00	2.00	2.00
Upstream Filter(I)	1.00	0.00	1.00	1.00	0.00	1.00	1.00	1.00	1.00	1.00	1.00	1.00
Uniform Delay (d), s/veh	46.4	0.0	50.9	54.7	0.0	55.4	6.2	9.9	9.9	5.8	0.0	0.0
Incr Delay (d2), s/veh	0.9	0.0	4.7	0.2	0.0	0.7	0.4	0.3	0.7	1.2	1.5	3.1
Initial Q Delay(d3),s/veh	0.0	0.0	0.0	0.0	0.0	0.0	0.0	0.0	0.0	0.0	0.0	0.0
%ile Back of Q (50%), veh/ln	2.7	0.0	9.1	0.4	0.0	0.0	0.3	5.0	5.1	1.8	0.5	1.1
Lane Grp Delay (d), s/veh	47.3	0.0	55.5	54.9	0.0	56.1	6.6	10.2	10.6	7.0	1.5	3.1
Lane Grp LOS	D		E	D		E	A	B	B	A	A	A
Approach Vol, veh/h		358			46			1190			2941	
Approach Delay, s/veh		53.4			55.7			10.3			2.5	
Approach LOS		D			E			B			A	

Timer												
Assigned Phs	3	8			4		1	6		5	2	
Phs Duration (G+Y+Rc), s	13.2	28.4			15.2		8.4	89.4		14.1	95.0	
Change Period (Y+Rc), s	5.5	5.5			5.5		5.5	5.5		5.5	5.5	
Max Green Setting (Gmax), s	12.5	45.5			27.5		8.5	78.5		19.5	89.5	
Max Q Clear Time (g_c+I1), s	7.9	21.6			8.4		2.8	13.9		7.8	2.0	
Green Ext Time (p_c), s	0.1	1.3			1.3		0.0	45.1		0.8	54.6	

Intersection Summary	
HCM 2010 Ctrl Delay	9.1
HCM 2010 LOS	A

Notes

HCM 2010 Signalized Intersection Summary
4295: Runyon Rd & Beltline Rd

7/20/2015

Movement	EBL	EBT	EBR	WBL	WBT	WBR	NBL	NBT	NBR	SBL	SBT	SBR
Lane Configurations												
Volume (veh/h)	8	1412	15	35	1097	0	47	0	35	9	1	2
Number	1	6	16	5	2	12	7	4	14	3	8	18
Initial Q (Qb), veh	0	0	0	0	0	0	0	0	0	0	0	0
Ped-Bike Adj(A_pbT)	1.00		1.00	1.00		1.00	1.00		1.00	1.00		1.00
Parking Bus Adj	1.00	1.00	1.00	1.00	1.00	1.00	1.00	1.00	1.00	1.00	1.00	1.00
Adj Sat Flow veh/h/ln	186.3	186.3	186.3	186.3	186.3	190.0	186.3	186.3	190.0	186.3	186.3	190.0
Lanes	1	3	1	1	3	0	2	1	0	1	1	0
Cap, veh/h	443	4105	1163	400	4184	0	465	0	133	170	66	49
Arrive On Green	0.07	1.00	1.00	0.10	1.00	0.00	0.05	0.00	0.07	0.03	0.07	0.05
Sat Flow, veh/h	1774	5588	1583	1774	5588	0	3442	0	1583	1774	990	742
Grp Volume(v), veh/h	18	1486	27	66	1261	0	70	0	74	16	0	7
Grp Sat Flow(s),veh/h/ln	1774	1863	1583	1774	1863	0	1721	0	1583	1774	0	1732
Q Serve(g_s), s	0.3	0.0	0.0	0.9	0.0	0.0	2.2	0.0	5.5	1.0	0.0	0.5
Cycle Q Clear(g_c), s	0.3	0.0	0.0	0.9	0.0	0.0	2.2	0.0	5.5	1.0	0.0	0.5
Prop In Lane	1.00		1.00	1.00		0.00	1.00		1.00	1.00		0.43
Lane Grp Cap(c), veh/h	443	4105	1163	400	4184	0	465	0	133	170	0	115
V/C Ratio(X)	0.04	0.36	0.02	0.17	0.30	0.00	0.15	0.00	0.56	0.09	0.00	0.06
Avail Cap(c_a), veh/h	525	4105	1163	456	4184	0	568	0	452	298	0	537
HCM Platoon Ratio	2.00	2.00	2.00	2.00	2.00	2.00	1.00	1.00	1.00	1.00	1.00	1.00
Upstream Filter(I)	0.88	0.88	0.88	1.00	1.00	0.00	1.00	0.00	1.00	1.00	0.00	1.00
Uniform Delay (d), s/veh	3.2	0.0	0.0	2.3	0.0	0.0	45.8	0.0	54.7	50.1	0.0	53.9
Incr Delay (d2), s/veh	0.0	0.2	0.0	0.2	0.2	0.0	0.1	0.0	3.6	0.2	0.0	0.2
Initial Q Delay(d3),s/veh	0.0	0.0	0.0	0.0	0.0	0.0	0.0	0.0	0.0	0.0	0.0	0.0
%ile Back of Q (50%), veh/ln	0.1	0.1	0.0	0.3	0.1	0.0	1.0	0.0	2.4	0.5	0.0	0.2
Lane Grp Delay (d), s/veh	3.2	0.2	0.0	2.5	0.2	0.0	45.9	0.0	58.3	50.3	0.0	54.2
Lane Grp LOS	A	A	A	A	A		D		E	D		D
Approach Vol, veh/h		1531			1327			144			23	
Approach Delay, s/veh		0.3			0.3			52.3			51.5	
Approach LOS		A			A			D			D	

Timer												
Assigned Phs	1	6		5	2		7	4		3	8	
Phs Duration (G+Y+Rc), s	7.3	93.0		9.1	94.7		9.3	13.3		7.2	11.1	
Change Period (Y+Rc), s	5.5	5.5		5.5	5.5		5.5	5.5		5.5	5.5	
Max Green Setting (Gmax), s	7.5	87.5		7.5	87.5		7.5	32.5		10.5	35.5	
Max Q Clear Time (g_c+I1), s	2.3	2.0		2.9	2.0		4.2	7.5		3.0	2.5	
Green Ext Time (p_c), s	0.0	29.7		0.1	29.7		0.1	0.3		0.0	0.3	

Intersection Summary	
HCM 2010 Ctrl Delay	3.1
HCM 2010 LOS	A

Notes

Lane Group	EBL	EBT	EBR	WBL	WBT	WBR	NBL	NBT	NBR	SBL	SBT	SBR
Lane Configurations												
Volume (vph)	146	1334	44	82	1002	48	25	52	48	27	69	123
Ideal Flow (vphpl)	1900	1900	1900	1900	1900	1900	1900	1900	1900	1900	1900	1900
Storage Length (ft)	150		0	200		0	100		140	100		120
Storage Lanes	1		0	1		0	1		1	1		0
Taper Length (ft)	25			25			25			25		
Lane Util. Factor	1.00	0.91	0.91	1.00	0.91	0.91	1.00	1.00	1.00	1.00	1.00	1.00
Frt		0.993			0.993				0.850			0.850
Flt Protected	0.950			0.950			0.950			0.950		
Satd. Flow (prot)	1770	5050	0	1770	5050	0	1770	1863	1583	1770	1863	1583
Flt Permitted	0.158			0.149			0.542			0.697		
Satd. Flow (perm)	294	5050	0	278	5050	0	1010	1863	1583	1298	1863	1583
Right Turn on Red			Yes			Yes			Yes			Yes
Satd. Flow (RTOR)		6			7				170			211
Link Speed (mph)		40			40			30			30	
Link Distance (ft)		907			950			997			322	
Travel Time (s)		15.5			16.2			22.7			7.3	
Peak Hour Factor	0.59	0.94	0.68	0.90	0.89	0.86	0.89	0.94	0.90	0.73	0.91	0.68
Adj. Flow (vph)	247	1419	65	91	1126	56	28	55	53	37	76	181
Shared Lane Traffic (%)												
Lane Group Flow (vph)	247	1484	0	91	1182	0	28	55	53	37	76	181
Enter Blocked Intersection	No	No	No	No	No	No	No	No	No	No	No	No
Lane Alignment	Left	Left	Right	Left	Left	Right	Left	Left	Right	Left	Left	Right
Median Width(ft)		12			12			12			12	
Link Offset(ft)		0			0			0			0	
Crosswalk Width(ft)		16			16			16			16	
Two way Left Turn Lane												
Headway Factor	1.00	1.00	1.00	1.00	1.00	1.00	1.00	1.00	1.00	1.00	1.00	1.00
Turning Speed (mph)	15		9	15		9	15		9	15		9
Number of Detectors	1	1		1	1		1	1	1	1	1	1
Detector Template												
Leading Detector (ft)	50	50		50	50		50	50	50	50	50	50
Trailing Detector (ft)	0	0		0	0		0	0	0	0	0	0
Detector 1 Position(ft)	0	0		0	0		0	0	0	0	0	0
Detector 1 Size(ft)	50	50		50	50		50	50	50	50	50	50
Detector 1 Type	Cl+Ex	Cl+Ex		Cl+Ex	Cl+Ex		Cl+Ex	Cl+Ex	Cl+Ex	Cl+Ex	Cl+Ex	Cl+Ex
Detector 1 Channel												
Detector 1 Extend (s)	0.0	0.0		0.0	0.0		0.0	0.0	0.0	0.0	0.0	0.0
Detector 1 Queue (s)	0.0	0.0		0.0	0.0		0.0	0.0	0.0	0.0	0.0	0.0
Detector 1 Delay (s)	0.0	0.0		0.0	0.0		0.0	0.0	0.0	0.0	0.0	0.0
Turn Type	pm+pt	NA		pm+pt	NA		custom	NA	Perm	pm+pt	NA	custom
Protected Phases	1	6 14		13	2 10		15	4 12		11	8 16	
Permitted Phases	6 14			2 10			4		4 12	8 16		8
Detector Phase	1	6 14		13	2 10		15	4 12	4 12	11	8 16	8
Switch Phase												
Minimum Initial (s)	4.0			4.0			4.0			4.0		4.0
Minimum Split (s)	13.0			13.0			13.0			13.0		16.0
Total Split (s)	20.0			18.0			13.0			13.0		20.0
Total Split (%)	12.5%			11.3%			8.1%			8.1%		12.5%

Lane Group	ø2	ø4	ø6	ø10	ø12	ø14	ø16
Lane Configurations							
Volume (vph)							
Ideal Flow (vphpl)							
Storage Length (ft)							
Storage Lanes							
Taper Length (ft)							
Lane Util. Factor							
Frt							
Flt Protected							
Satd. Flow (prot)							
Flt Permitted							
Satd. Flow (perm)							
Right Turn on Red							
Satd. Flow (RTOR)							
Link Speed (mph)							
Link Distance (ft)							
Travel Time (s)							
Peak Hour Factor							
Adj. Flow (vph)							
Shared Lane Traffic (%)							
Lane Group Flow (vph)							
Enter Blocked Intersection							
Lane Alignment							
Median Width(ft)							
Link Offset(ft)							
Crosswalk Width(ft)							
Two way Left Turn Lane							
Headway Factor							
Turning Speed (mph)							
Number of Detectors							
Detector Template							
Leading Detector (ft)							
Trailing Detector (ft)							
Detector 1 Position(ft)							
Detector 1 Size(ft)							
Detector 1 Type							
Detector 1 Channel							
Detector 1 Extend (s)							
Detector 1 Queue (s)							
Detector 1 Delay (s)							
Turn Type							
Protected Phases	2	4	6	10	12	14	16
Permitted Phases							
Detector Phase							
Switch Phase							
Minimum Initial (s)	4.0	4.0	4.0	4.0	4.0	4.0	4.0
Minimum Split (s)	29.5	16.0	24.5	22.0	22.0	22.0	22.0
Total Split (s)	35.0	20.0	55.0	53.0	19.0	35.0	19.0
Total Split (%)	22%	13%	34%	33%	12%	22%	12%

Lane Group	EBL	EBT	EBR	WBL	WBT	WBR	NBL	NBT	NBR	SBL	SBT	SBR
Maximum Green (s)	14.5			12.5			7.5			7.5		14.5
Yellow Time (s)	3.5			3.5			3.5			3.5		3.5
All-Red Time (s)	2.0			2.0			2.0			2.0		2.0
Lost Time Adjust (s)	-2.5			-2.5			-3.0			-2.5		-2.5
Total Lost Time (s)	3.0			3.0			2.5			3.0		3.0
Lead/Lag	Lead			Lead			Lead			Lead		
Lead-Lag Optimize?	Yes			Yes			Yes			Yes		
Vehicle Extension (s)	3.0			3.0			3.0			3.0		3.0
Recall Mode	None			None			None			None		None
Walk Time (s)												5.0
Flash Dont Walk (s)												2.0
Pedestrian Calls (#/hr)												0
Act Effct Green (s)	95.6	95.6		89.4	89.4		20.7	29.8	29.8	38.1	32.3	10.8
Actuated g/C Ratio	0.60	0.60		0.56	0.56		0.13	0.19	0.19	0.24	0.20	0.07
v/c Ratio	0.77	0.49		0.37	0.42		0.16	0.16	0.12	0.11	0.20	0.60
Control Delay	38.0	10.0		20.2	12.1		33.0	29.4	0.6	23.7	29.1	12.7
Queue Delay	0.0	0.0		0.0	0.0		0.0	0.0	0.0	0.0	0.0	0.0
Total Delay	38.0	10.0		20.2	12.1		33.0	29.4	0.6	23.7	29.1	12.7
LOS	D	B		C	B		C	C	A	C	C	B
Approach Delay		14.0			12.7			18.9			18.3	
Approach LOS		B			B			B			B	

Intersection Summary	
Area Type:	Other
Cycle Length: 160	
Actuated Cycle Length: 160	
Offset: 75 (47%), Referenced to phase 2:WBTL and 6:EBTL, Start of 1st Green	
Natural Cycle: 130	
Control Type: Actuated-Coordinated	
Maximum v/c Ratio: 0.77	
Intersection Signal Delay: 14.1	Intersection LOS: B
Intersection Capacity Utilization 49.5%	ICU Level of Service A
Analysis Period (min) 15	

Splits and Phases: 4296: Surveyor Blvd & Beltline Rd

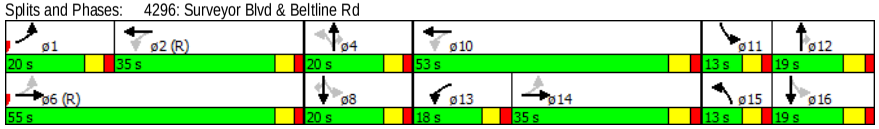

Lane Group	ø2	ø4	ø6	ø10	ø12	ø14	ø16
Maximum Green (s)	29.5	14.5	49.5	47.0	13.0	29.0	13.0
Yellow Time (s)	3.5	3.5	3.5	4.0	4.0	4.0	4.0
All-Red Time (s)	2.0	2.0	2.0	2.0	2.0	2.0	2.0
Lost Time Adjust (s)							
Total Lost Time (s)							
Lead/Lag	Lag				Lag	Lag	Lag
Lead-Lag Optimize?	Yes						
Vehicle Extension (s)	3.0	3.0	3.0	3.0	3.0	3.0	3.0
Recall Mode	C-Max	Min	C-Max	Max	Min	None	Max
Walk Time (s)	5.0	5.0	5.0	5.0	5.0	5.0	5.0
Flash Dont Walk (s)	19.0	24.0	14.0	11.0	11.0	11.0	11.0
Pedestrian Calls (#/hr)	0	0	0	0	0	0	0
Act Effct Green (s)							
Actuated g/C Ratio							
v/c Ratio							
Control Delay							
Queue Delay							
Total Delay							
LOS							
Approach Delay							
Approach LOS							

Intersection Summary

HCM 2010 TWSC
2: Northeast Drive & Beltline Rd

7/20/2015

Intersection	
Intersection Delay, s/veh	0.9

Movement	EBT	EBR	WBL	WBT	NBL	NBR
Vol, veh/h	1631	1	0	0	0	61
Conflicting Peds, #/hr	0	0	0	0	0	0
Sign Control	Free	Free	Free	Free	Stop	Stop
RT Channelized	-	None	-	None	-	None
Storage Length	-	140	-	-	-	0
Veh in Median Storage, #	0	-	-	0	0	-
Grade, %	0	-	-	0	0	-
Peak Hour Factor	92	92	92	92	92	92
Heavy Vehicles, %	2	2	2	2	2	2
Mvmt Flow	1773	1	0	0	0	66

Major/Minor	Major1		Major2		Minor1	
Conflicting Flow All	0	0	1773	0	1773	886
Stage 1	-	-	-	-	1773	-
Stage 2	-	-	-	-	0	-
Follow-up Headway	-	-	3.12	-	3.82	3.92
Pot Capacity-1 Maneuver	-	-	163	-	124	247
Stage 1	-	-	-	-	79	-
Stage 2	-	-	-	-	-	-
Time blocked-Platoon, %	-	-		-		
Mov Capacity-1 Maneuver	-	-	163	-	124	247
Mov Capacity-2 Maneuver	-	-	-	-	124	-
Stage 1	-	-	-	-	79	-
Stage 2	-	-	-	-	-	-

Approach	EB	WB	NB
HCM Control Delay, s	0	0	24.8
HCM LOS			C

Minor Lane / Major Mvmt	NBLn1	EBT	EBR	WBL	WBT
Capacity (veh/h)	247	-	-	163	-
HCM Lane V/C Ratio	0.268	-	-	-	-
HCM Control Delay (s)	24.8	-	-	0	-
HCM Lane LOS	C			A	
HCM 95th %tile Q(veh)	1.052	-	-	0	-

Notes

~ : Volume Exceeds Capacity; $: Delay Exceeds 300 Seconds; Error : Computation Not Defined

HCM 2010 TWSC
4: Midway Rd & East Drive

7/20/2015

Intersection	
Intersection Delay, s/veh	2.5

Movement	EBL	EBR	NBL	NBT	SBT	SBR
Vol, veh/h	5	29	24	1044	2433	7
Conflicting Peds, #/hr	0	0	0	0	0	0
Sign Control	Stop	Stop	Free	Free	Free	Free
RT Channelized	-	None	-	None	-	None
Storage Length	0	-	125	-	-	-
Veh in Median Storage, #	0	-	-	0	0	-
Grade, %	0	-	-	0	0	-
Peak Hour Factor	92	92	92	92	92	92
Heavy Vehicles, %	2	2	2	2	2	2
Mvmt Flow	5	32	26	1135	2645	8

Major/Minor	Minor2		Major1		Major2	
Conflicting Flow All	3211	1326	2652	0	-	0
Stage 1	2705	-	-	-	-	-
Stage 2	506	-	-	-	-	-
Follow-up Headway	3.82	3.92	3.12	-	-	-
Pot Capacity-1 Maneuver	20	125	58	-	-	-
Stage 1	20	-	-	-	-	-
Stage 2	521	-	-	-	-	-
Time blocked-Platoon, %				-	-	-
Mov Capacity-1 Maneuver	11	125	58	-	-	-
Mov Capacity-2 Maneuver	11	-	-	-	-	-
Stage 1	20	-	-	-	-	-
Stage 2	287	-	-	-	-	-

Approach	EB	NB	SB
HCM Control Delay, s	183.8	2.5	0
HCM LOS	F		

Minor Lane / Major Mvmt	NBL	NBT	EBLn1	SBU	SBT	SBR
Capacity (veh/h)	58	-	50	-	-	-
HCM Lane V/C Ratio	0.45	-	0.739	-	-	-
HCM Control Delay (s)	110.269	-	183.8	-	-	-
HCM Lane LOS	F		F			
HCM 95th %tile Q(veh)	1.715	-	2.996	-	-	-

Notes

~ : Volume Exceeds Capacity; $: Delay Exceeds 300 Seconds; Error : Computation Not Defined

Intersection	
Intersection Delay, s/veh	0.8

Movement	EBL	EBT	EBR	WBL	WBT	WBR	NBL	NBT	NBR	SBL	SBT	SBR
Vol, veh/h	0	0	1	4	0	9	6	1025	35	89	2389	0
Conflicting Peds, #/hr	0	0	0	0	0	0	0	0	0	0	0	0
Sign Control	Stop	Stop	Stop	Stop	Stop	Stop	Free	Free	Free	Free	Free	Free
RT Channelized	-	-	None	-	-	None	-	-	None	-	-	None
Storage Length	-	-	-	-	-	0	130	-	-	125	-	-
Veh in Median Storage, #	-	0	-	-	0	-	-	0	-	-	0	-
Grade, %	-	0	-	-	0	-	-	0	-	-	0	-
Peak Hour Factor	92	92	92	92	92	92	92	92	92	92	92	92
Heavy Vehicles, %	2	2	2	2	2	2	2	2	2	2	2	2
Mvmt Flow	0	0	1	4	0	10	7	1114	38	97	2597	0

Major/Minor	Minor2			Minor1			Major1			Major2		
Conflicting Flow All	3249	3955	1298	2378	3936	576	2597	0	0	1152	0	0
Stage 1	2790	2790	-	1146	1146	-	-	-	-	-	-	-
Stage 2	459	1165	-	1232	2790	-	-	-	-	-	-	-
Follow-up Headway	3.82	4.02	3.92	3.82	4.02	3.92	3.12	-	-	3.12	-	-
Pot Capacity-1 Maneuver	10	3	131	37	3	394	62	-	-	330	-	-
Stage 1	10	40	-	157	272	-	-	-	-	-	-	-
Stage 2	504	267	-	168	40	-	-	-	-	-	-	-
Time blocked-Platoon, %								-	-		-	-
Mov Capacity-1 Maneuver	7	2	131	26	2	394	62	-	-	330	-	-
Mov Capacity-2 Maneuver	7	2	-	26	2	-	-	-	-	-	-	-
Stage 1	9	28	-	139	241	-	-	-	-	-	-	-
Stage 2	436	237	-	118	28	-	-	-	-	-	-	-

Approach	EB	WB	NB	SB
HCM Control Delay, s	32.7	63.6	0.4	0.7
HCM LOS	D	F		

Minor Lane / Major Mvmt	NBL	NBT	NBR	EBLn1	WBLn1	WBLn2	SBL	SBT	SBR
Capacity (veh/h)	62	-	-	131	43	394	330	-	-
HCM Lane V/C Ratio	0.105	-	-	0.008	0.177	0.017	0.293	-	-
HCM Control Delay (s)	69.778	-	-	32.7	105.9	14.3	20.371	-	-
HCM Lane LOS	F			D	F	B	C		
HCM 95th %tile Q(veh)	0.336	-	-	0.025	0.571	0.05	1.195	-	-

Notes

~ : Volume Exceeds Capacity; $: Delay Exceeds 300 Seconds; Error : Computation Not Defined

Intersection	
Intersection Delay, s/veh	6.8

Movement	EBL	EBT	WBT	WBR	SBL	SBR
Vol, veh/h	2	0	0	19	58	7
Conflicting Peds, #/hr	0	0	0	0	0	0
Sign Control	Free	Free	Free	Free	Stop	Stop
RT Channelized	-	None	-	None	-	None
Storage Length	-	-	-	-	0	-
Veh in Median Storage, #	-	0	0	-	0	-
Grade, %	-	0	0	-	0	-
Peak Hour Factor	92	92	92	92	92	92
Heavy Vehicles, %	2	2	2	2	2	2
Mvmt Flow	2	0	0	21	63	8

Major/Minor	Major1		Major2		Minor2	
Conflicting Flow All	21	0	-	0	14	10
Stage 1	-	-	-	-	10	-
Stage 2	-	-	-	-	4	-
Follow-up Headway	2.218	-	-	-	3.518	3.318
Pot Capacity-1 Maneuver	1595	-	-	-	1005	1071
Stage 1	-	-	-	-	1013	-
Stage 2	-	-	-	-	1019	-
Time blocked-Platoon, %		-	-	-		
Mov Capacity-1 Maneuver	1595	-	-	-	1004	1071
Mov Capacity-2 Maneuver	-	-	-	-	1004	-
Stage 1	-	-	-	-	1013	-
Stage 2	-	-	-	-	1018	-

Approach	EB	WB	SB
HCM Control Delay, s	7.3	0	8.8
HCM LOS			A

Minor Lane / Major Mvmt	EBL	EBT	WBT	WBR	SBLn1
Capacity (veh/h)	1595	-	-	-	1011
HCM Lane V/C Ratio	0.001	-	-	-	0.07
HCM Control Delay (s)	7.26	0	-	-	8.8
HCM Lane LOS	A	A			A
HCM 95th %tile Q(veh)	0.004	-	-	-	0.225

Notes

~ : Volume Exceeds Capacity; $: Delay Exceeds 300 Seconds; Error : Computation Not Defined

Two Way Analysis cannot be performed on an All Way Stop Intersection.

Intersection	
Intersection Delay, s/veh	0.9

Movement	EBL	EBT	EBR	WBL	WBT	WBR	NBL	NBT	NBR	SBL	SBT	SBR
Vol, veh/h	15	1567	4	20	1059	3	0	0	65	0	0	2
Conflicting Peds, #/hr	0	0	0	0	0	0	0	0	0	0	0	0
Sign Control	Free	Free	Free	Free	Free	Free	Stop	Stop	Stop	Stop	Stop	Stop
RT Channelized	-	-	None	-	-	None	-	-	None	-	-	None
Storage Length	160	-	160	175	-	-	-	-	0	-	-	0
Veh in Median Storage, #	-	0	-	-	0	-	-	0	-	-	0	-
Grade, %	-	0	-	-	0	-	-	0	-	-	0	-
Peak Hour Factor	92	92	92	92	92	92	92	92	92	92	92	92
Heavy Vehicles, %	2	2	2	2	2	2	2	2	2	2	2	2
Mvmt Flow	16	1703	4	22	1151	3	0	0	71	0	0	2

Major/Minor	Major1			Major2			Minor1			Minor2		
Conflicting Flow All	1154	0	0	1703	0	0	2240	2934	852	1910	2932	577
Stage 1	-	-	-	-	-	-	1736	1736	-	1196	1196	-
Stage 2	-	-	-	-	-	-	504	1198	-	714	1736	-
Follow-up Headway	3.12	-	-	3.12	-	-	3.82	4.02	3.92	3.82	4.02	3.92
Pot Capacity-1 Maneuver	330	-	-	177	-	-	45	15	260	72	15	394
Stage 1	-	-	-	-	-	-	60	140	-	145	258	-
Stage 2	-	-	-	-	-	-	474	257	-	353	140	-
Time blocked-Platoon, %		-	-		-	-						
Mov Capacity-1 Maneuver	330	-	-	177	-	-	39	12	260	46	12	394
Mov Capacity-2 Maneuver	-	-	-	-	-	-	39	12	-	46	12	-
Stage 1	-	-	-	-	-	-	57	133	-	138	226	-
Stage 2	-	-	-	-	-	-	413	225	-	245	133	-

Approach	EB	WB	NB	SB
HCM Control Delay, s	0.2	0.5	23.9	14.2
HCM LOS			C	B

Minor Lane / Major Mvmt	NBLn1	EBL	EBT	EBR	WBL	WBT	WBR	SBLn1
Capacity (veh/h)	260	330	-	-	177	-	-	394
HCM Lane V/C Ratio	0.272	0.049	-	-	0.123	-	-	0.006
HCM Control Delay (s)	23.9	16.475	-	-	28.167	-	-	14.2
HCM Lane LOS	C	C			D			B
HCM 95th %tile Q(veh)	1.071	0.155	-	-	0.411	-	-	0.017

Notes

~ : Volume Exceeds Capacity; $: Delay Exceeds 300 Seconds; Error : Computation Not Defined

Intersection	
Intersection Delay, s/veh	8.3
Intersection LOS	A

Movement	EBL	EBT	EBR	WBL	WBT	WBR	NBL	NBT	NBR	SBL	SBT	SBR
Vol, veh/h	10	17	1	22	11	41	0	72	48	83	80	8
Peak Hour Factor	0.92	0.92	0.92	0.92	0.92	0.92	0.92	0.92	0.92	0.92	0.92	0.92
Heavy Vehicles, %	2	2	2	2	2	2	2	2	2	2	2	2
Mvmt Flow	11	18	1	24	12	45	0	78	52	90	87	9
Number of Lanes	0	1	0	0	1	0	0	1	0	0	1	0

Approach	EB	WB	NB	SB
Opposing Approach	WB	EB	SB	NB
Opposing Lanes	1	1	1	1
Conflicting Approach Left	SB	NB	EB	WB
Conflicting Lanes Left	1	1	1	1
Conflicting Approach Right	NB	SB	WB	EB
Conflicting Lanes Right	1	1	1	1
HCM Control Delay	8	7.9	7.9	8.7
HCM LOS	A	A	A	A

Lane	NBLn1	EBLn1	WBLn1	SBLn1
Vol Left, %	0%	36%	30%	49%
Vol Thru, %	60%	61%	15%	47%
Vol Right, %	40%	4%	55%	5%
Sign Control	Stop	Stop	Stop	Stop
Traffic Vol by Lane	120	28	74	171
LT Vol	72	17	11	80
Through Vol	48	1	41	8
RT Vol	0	10	22	83
Lane Flow Rate	130	30	80	186
Geometry Grp	1	1	1	1
Degree of Util (X)	0.15	0.04	0.098	0.222
Departure Headway (Hd)	4.15	4.78	4.398	4.406
Convergence, Y/N	Yes	Yes	Yes	Yes
Cap	867	752	818	820
Service Time	2.16	2.791	2.407	2.406
HCM Lane V/C Ratio	0.15	0.04	0.098	0.227
HCM Control Delay	7.9	8	7.9	8.7
HCM Lane LOS	A	A	A	A
HCM 95th-tile Q	0.5	0.1	0.3	0.8

Notes

~ : Volume Exceeds Capacity; $: Delay Exceeds 300 Seconds; Error : Computation Not Defined

HCM 2010 Signalized Intersection Summary
4278: Midway Rd & Lindbergh Dr

7/20/2015

Movement	EBL	EBT	EBR	WBL	WBT	WBR	NBL	NBT	NBR	SBL	SBT	SBR
Lane Configurations												
Volume (veh/h)	59	32	44	55	17	189	28	2007	84	220	1869	36
Number	3	8	18	7	4	14	1	6	16	5	2	12
Initial Q (Qb), veh	0	0	0	0	0	0	0	0	0	0	0	0
Ped-Bike Adj(A_pbT)	1.00		1.00	1.00		1.00	1.00		1.00	1.00		1.00
Parking Bus Adj	1.00	1.00	1.00	1.00	1.00	1.00	1.00	1.00	1.00	1.00	1.00	1.00
Adj Sat Flow veh/h/ln	186.3	186.3	190.0	186.3	193.7	186.3	186.3	186.3	190.0	186.3	186.3	190.0
Lanes	1	1	0	1	1	1	1	3	0	1	3	0
Cap, veh/h	356	118	179	319	341	278	172	3016	135	340	3473	67
Arrive On Green	0.07	0.18	0.17	0.07	0.18	0.18	0.08	1.00	1.00	0.11	0.64	0.63
Sat Flow, veh/h	1774	667	1016	1774	1937	1583	1774	5309	238	1774	5465	105
Grp Volume(v), veh/h	87	0	111	85	23	230	43	1465	720	289	1591	790
Grp Sat Flow(s),veh/h/ln	1774	0	1683	1774	1937	1583	1774	1863	1821	1774	1863	1844
Q Serve(g_s), s	5.8	0.0	8.6	5.6	1.5	20.7	1.4	0.0	0.0	10.7	40.2	40.5
Cycle Q Clear(g_c), s	5.8	0.0	8.6	5.6	1.5	20.7	1.4	0.0	0.0	10.7	40.2	40.5
Prop In Lane	1.00		0.60	1.00		1.00	1.00		0.13	1.00		0.06
Lane Grp Cap(c), veh/h	356	0	297	319	341	278	172	2117	1034	340	2368	1172
V/C Ratio(X)	0.24	0.00	0.37	0.27	0.07	0.83	0.25	0.69	0.70	0.85	0.67	0.67
Avail Cap(c_a), veh/h	379	0	330	368	406	332	234	2117	1034	402	2368	1172
HCM Platoon Ratio	1.00	1.00	1.00	1.00	1.00	1.00	2.00	2.00	2.00	1.00	1.00	1.00
Upstream Filter(I)	1.00	0.00	1.00	1.00	1.00	1.00	1.00	1.00	1.00	1.00	1.00	1.00
Uniform Delay (d), s/veh	44.4	0.0	54.1	44.7	50.8	58.8	15.4	0.0	0.0	27.5	17.1	17.2
Incr Delay (d2), s/veh	0.4	0.0	0.8	0.4	0.1	13.6	0.8	1.9	3.9	14.0	1.5	3.1
Initial Q Delay(d3),s/veh	0.0	0.0	0.0	0.0	0.0	0.0	0.0	0.0	0.0	0.0	0.0	0.0
%ile Back of Q (50%), veh/ln	2.7	0.0	3.9	2.6	0.7	9.6	0.6	0.6	1.1	8.3	17.7	18.2
Lane Grp Delay (d), s/veh	44.7	0.0	54.9	45.2	50.9	72.3	16.1	1.9	3.9	41.5	18.7	20.3
Lane Grp LOS	D		D	D	D	E	B	A	A	D	B	C
Approach Vol, veh/h		198			338			2228			2670	
Approach Delay, s/veh		50.4			64.0			2.8			21.6	
Approach LOS		D			E			A			C	

Timer												
Assigned Phs	3	8		7	4		1	6		5	2	
Phs Duration (G+Y+Rc), s	13.1	29.1		13.0	29.0		8.8	87.0		18.8	97.0	
Change Period (Y+Rc), s	5.5	5.5		5.5	5.5		5.5	5.5		5.5	5.5	
Max Green Setting (Gmax), s	9.5	26.5		11.5	28.5		8.5	81.5		18.5	91.5	
Max Q Clear Time (g_c+I1), s	7.8	10.6		7.6	22.7		3.4	2.0		12.7	42.5	
Green Ext Time (p_c), s	0.0	1.4		0.1	0.8		0.0	64.6		0.5	42.9	

Intersection Summary	
HCM 2010 Ctrl Delay	17.6
HCM 2010 LOS	B

Notes

HCM 2010 Signalized Intersection Summary
4287: Beltway Dr & Beltline Rd

7/20/2015

Movement	EBU	EBT	EBR	WBL	WBT	NBL	NBR
Lane Configurations							
Volume (veh/h)	16	1783	27	87	1894	27	202
Number		6	16	5	2	7	14
Initial Q (Qb), veh		0	0	0	0	0	0
Ped-Bike Adj(A_pbT)			1.00	1.00		1.00	1.00
Parking Bus Adj		1.00	1.00	1.00	1.00	1.00	1.00
Adj Sat Flow veh/h/ln		186.3	190.0	186.3	186.3	186.3	186.3
Lanes		3	0	1	3	1	2
Cap, veh/h		4178	80	168	4704	202	361
Arrive On Green		0.76	0.75	0.06	0.84	0.11	0.11
Sat Flow, veh/h		5466	104	1774	5588	1774	3167
Grp Volume(v), veh/h		1252	621	112	1953	43	238
Grp Sat Flow(s),veh/h/ln		1863	1844	1774	1863	1774	1583
Q Serve(g_s), s		16.2	16.3	2.9	11.6	3.0	9.8
Cycle Q Clear(g_c), s		16.2	16.3	2.9	11.6	3.0	9.8
Prop In Lane			0.06	1.00		1.00	1.00
Lane Grp Cap(c), veh/h		2848	1410	168	4704	202	361
V/C Ratio(X)		0.44	0.44	0.67	0.42	0.21	0.66
Avail Cap(c_a), veh/h		2848	1410	266	4704	417	745
HCM Platoon Ratio		1.00	1.00	1.00	1.00	1.00	1.00
Upstream Filter(I)		1.00	1.00	1.00	1.00	1.00	1.00
Uniform Delay (d), s/veh		5.7	5.7	51.7	2.6	54.7	57.7
Incr Delay (d2), s/veh		0.5	1.0	4.5	0.3	0.5	2.1
Initial Q Delay(d3),s/veh		0.0	0.0	0.0	0.0	0.0	0.0
%ile Back of Q (50%), veh/ln		6.5	6.6	4.1	3.6	1.4	0.1
Lane Grp Delay (d), s/veh		6.2	6.7	56.2	2.9	55.2	59.8
Lane Grp LOS		A	A	E	A	E	E
Approach Vol, veh/h		1873			2065	281	
Approach Delay, s/veh		6.4			5.8	59.1	
Approach LOS		A			A	E	

Timer							
Assigned Phs		6		5	2		
Phs Duration (G+Y+Rc), s		107.0		10.5	117.5		
Change Period (Y+Rc), s		5.5		5.5	5.5		
Max Green Setting (Gmax), s		101.5		12.5	106.5		
Max Q Clear Time (g_c+I1), s		18.3		4.9	13.6		
Green Ext Time (p_c), s		53.9		0.2	57.6		

Intersection Summary	
HCM 2010 Ctrl Delay	9.6
HCM 2010 LOS	A

Notes

HCM 2010 Signalized Intersection Summary
4288: Midway Rd & Beltline Rd

7/20/2015

Movement	EBL	EBT	EBR	WBL	WBT	WBR	NBL	NBT	NBR	SBL	SBT	SBR
Lane Configurations												
Volume (veh/h)	184	1216	310	330	1094	398	300	1537	347	367	1142	173
Number	1	6	16	5	2	12	7	4	14	3	8	18
Initial Q (Qb), veh	0	0	0	0	0	0	0	0	0	0	0	0
Ped-Bike Adj(A_pbT)	1.00		1.00	1.00		1.00	1.00		1.00	1.00		1.00
Parking Bus Adj	1.00	1.00	1.00	1.00	1.00	1.00	1.00	1.00	1.00	1.00	1.00	1.00
Adj Sat Flow veh/h/ln	186.3	186.3	186.3	186.3	186.3	190.0	186.3	186.3	186.3	186.3	186.3	186.3
Lanes	2	3	1	2	3	0	2	3	1	2	3	1
Cap, veh/h	409	1921	544	409	1333	500	581	1921	544	409	1642	465
Arrive On Green	0.16	0.46	0.46	0.12	0.34	0.33	0.22	0.46	0.00	0.24	0.59	0.00
Sat Flow, veh/h	3442	5588	1583	3442	3877	1455	3442	5588	1583	3442	5588	1583
Grp Volume(v), veh/h	312	1280	392	337	1142	494	345	1689	0	390	1344	0
Grp Sat Flow(s),veh/h/ln	1721	1863	1583	1721	1863	1606	1721	1863	1583	1721	1863	1583
Q Serve(g_s), s	13.9	28.6	32.1	15.3	46.4	46.7	14.4	43.9	0.0	17.9	30.6	0.0
Cycle Q Clear(g_c), s	13.9	28.6	32.1	15.3	46.4	46.7	14.4	43.9	0.0	17.9	30.6	0.0
Prop In Lane	1.00		1.00	1.00		0.91	1.00		1.00	1.00		1.00
Lane Grp Cap(c), veh/h	409	1921	544	409	1281	552	581	1921	544	409	1642	465
V/C Ratio(X)	0.76	0.67	0.72	0.82	0.89	0.89	0.59	0.88	0.00	0.95	0.82	0.00
Avail Cap(c_a), veh/h	409	1921	544	409	1281	552	581	1921	544	409	1642	465
HCM Platoon Ratio	1.33	1.33	1.33	1.00	1.00	1.00	1.33	1.33	1.33	2.00	2.00	2.00
Upstream Filter(I)	1.00	1.00	1.00	1.00	1.00	1.00	1.00	1.00	0.00	1.00	1.00	0.00
Uniform Delay (d), s/veh	65.2	36.3	37.2	68.9	49.7	50.6	57.1	40.4	0.0	60.6	29.6	0.0
Incr Delay (d2), s/veh	12.7	1.8	8.0	17.0	9.7	19.5	4.4	6.1	0.0	34.4	4.7	0.0
Initial Q Delay(d3),s/veh	0.0	0.0	0.0	0.0	0.0	0.0	0.0	0.0	0.0	0.0	0.0	0.0
%ile Back of Q (50%), veh/ln	6.7	13.0	13.3	7.8	23.6	22.0	6.5	20.5	0.0	9.2	12.2	0.0
Lane Grp Delay (d), s/veh	77.9	38.1	45.2	85.9	59.4	70.1	61.6	46.5	0.0	95.0	34.3	0.0
Lane Grp LOS	E	D	D	F	E	E	E	D		F	C	
Approach Vol, veh/h		1984			1973			2034			1734	
Approach Delay, s/veh		45.8			66.6			49.1			47.9	
Approach LOS		D			E			D			D	

Timer												
Assigned Phs	1	6		5	2		7	4		3	8	
Phs Duration (G+Y+Rc), s	22.0	58.0		22.0	58.0		30.0	58.0		22.0	50.0	
Change Period (Y+Rc), s	6.0	6.0		6.0	6.0		6.0	6.0		6.0	6.0	
Max Green Setting (Gmax), s	16.0	52.0		16.0	52.0		24.0	52.0		16.0	44.0	
Max Q Clear Time (g_c+I1), s	15.9	34.1		17.3	48.7		16.4	45.9		19.9	32.6	
Green Ext Time (p_c), s	0.1	9.6		0.0	2.3		0.9	4.1		0.0	6.5	

Intersection Summary												
HCM 2010 Ctrl Delay			52.5									
HCM 2010 LOS			D									

Notes

HCM 2010 Signalized Intersection Summary
4289: Midway Rd & Beltway Dr

7/20/2015

Movement	EBL	EBT	EBR	WBL	WBT	WBR	NBL	NBT	NBR	SBL	SBT	SBR
Lane Configurations												
Volume (veh/h)	48	35	98	63	48	60	148	2137	96	51	1701	87
Number	3	8	18	7	4	14	1	6	16	5	2	12
Initial Q (Qb), veh	0	0	0	0	0	0	0	0	0	0	0	0
Ped-Bike Adj(A_pbT)	1.00		1.00	1.00		1.00	1.00		1.00	1.00		1.00
Parking Bus Adj	1.00	1.00	1.00	1.00	1.00	1.00	1.00	1.00	1.00	1.00	1.00	1.00
Adj Sat Flow veh/h/ln	186.3	193.7	186.3	186.3	193.7	190.0	186.3	186.3	186.3	186.3	193.7	186.3
Lanes	1	1	1	1	1	0	1	3	1	1	3	1
Cap, veh/h	246	243	199	320	100	130	290	3643	1032	209	3700	1008
Arrive On Green	0.07	0.13	0.13	0.08	0.13	0.12	0.06	0.65	0.65	0.10	1.00	1.00
Sat Flow, veh/h	1774	1937	1583	1774	766	995	1774	5588	1583	1774	5812	1583
Grp Volume(v), veh/h	86	51	122	95	0	154	151	2203	126	65	2025	107
Grp Sat Flow(s),veh/h/ln	1774	1937	1583	1774	0	1762	1774	1863	1583	1774	1937	1583
Q Serve(g_s), s	5.1	3.0	9.2	5.6	0.0	10.5	3.2	28.5	3.8	1.5	0.0	0.0
Cycle Q Clear(g_c), s	5.1	3.0	9.2	5.6	0.0	10.5	3.2	28.5	3.8	1.5	0.0	0.0
Prop In Lane	1.00		1.00	1.00		0.56	1.00		1.00	1.00		1.00
Lane Grp Cap(c), veh/h	246	243	199	320	0	229	290	3643	1032	209	3700	1008
V/C Ratio(X)	0.35	0.21	0.61	0.30	0.00	0.67	0.52	0.60	0.12	0.31	0.55	0.11
Avail Cap(c_a), veh/h	298	647	529	364	0	588	403	3643	1032	278	3700	1008
HCM Platoon Ratio	1.00	1.00	1.00	1.00	1.00	1.00	1.00	1.00	1.00	2.00	2.00	2.00
Upstream Filter(I)	1.00	1.00	1.00	1.00	0.00	1.00	1.00	1.00	1.00	1.00	1.00	1.00
Uniform Delay (d), s/veh	42.8	49.4	52.1	41.6	0.0	52.6	5.4	12.6	8.3	10.6	0.0	0.0
Incr Delay (d2), s/veh	0.8	0.4	3.1	0.5	0.0	3.4	1.4	0.8	0.2	0.8	0.6	0.2
Initial Q Delay(d3),s/veh	0.0	0.0	0.0	0.0	0.0	0.0	0.0	0.0	0.0	0.0	0.0	0.0
%ile Back of Q (50%), veh/ln	2.4	1.5	3.9	2.6	0.0	5.0	1.2	11.9	1.4	0.6	0.2	0.1
Lane Grp Delay (d), s/veh	43.6	49.8	55.2	42.1	0.0	55.9	6.9	13.3	8.5	11.4	0.6	0.2
Lane Grp LOS	D	D	E	D		E	A	B	A	B	A	A
Approach Vol, veh/h		259			249			2480			2197	
Approach Delay, s/veh		50.3			50.7			12.7			0.9	
Approach LOS		D			D			B			A	

Timer												
Assigned Phs	3	8		7	4		1	6		5	2	
Phs Duration (G+Y+Rc), s	12.3	18.8		12.9	19.4		11.0	85.0		9.1	83.1	
Change Period (Y+Rc), s	5.5	5.5		5.5	5.5		5.5	5.5		5.5	5.5	
Max Green Setting (Gmax), s	10.5	39.5		10.5	39.5		13.5	79.5		8.5	74.5	
Max Q Clear Time (g_c+I1), s	7.1	11.2		7.6	12.5		5.2	30.5		3.5	2.0	
Green Ext Time (p_c), s	0.1	1.4		0.1	1.4		0.3	43.1		0.1	60.3	

Intersection Summary												
HCM 2010 Ctrl Delay			11.4									
HCM 2010 LOS			B									

Notes

HCM 2010 Signalized Intersection Summary
4290: Midway Rd & Proton Dr

7/20/2015

Movement	EBL	EBT	EBR	WBL	WBT	WBR	NBL	NBT	NBR	SBL	SBT	SBR
Lane Configurations												
Volume (veh/h)	89	5	75	6	23	96	119	2064	8	43	1749	67
Number	3	8	18	7	4	14	1	6	16	5	2	12
Initial Q (Qb), veh	0	0	0	0	0	0	0	0	0	0	0	0
Ped-Bike Adj(A_pbT)	1.00		1.00	1.00		1.00	1.00		1.00	1.00		1.00
Parking Bus Adj	1.00	1.00	1.00	1.00	1.00	1.00	1.00	1.00	1.00	1.00	1.00	1.00
Adj Sat Flow veh/h/ln	186.3	193.7	190.0	190.0	186.3	186.3	186.3	186.3	190.0	186.3	186.3	190.0
Lanes	1	1	0	0	1	1	1	3	0	1	3	0
Cap, veh/h	310	44	312	51	164	163	242	3760	21	201	3565	141
Arrive On Green	0.09	0.21	0.21	0.10	0.10	0.10	0.05	0.68	0.67	0.06	0.89	0.87
Sat Flow, veh/h	1774	206	1472	189	1589	1583	1774	5552	31	1774	5339	212
Grp Volume(v), veh/h	113	0	106	42	0	104	123	1556	776	57	1522	751
Grp Sat Flow(s),veh/h/ln	1774	0	1678	1777	0	1583	1774	1863	1857	1774	1863	1825
Q Serve(g_s), s	7.3	0.0	7.2	0.0	0.0	8.6	2.7	31.4	31.5	1.3	13.6	14.0
Cycle Q Clear(g_c), s	7.3	0.0	7.2	2.8	0.0	8.6	2.7	31.4	31.5	1.3	13.6	14.0
Prop In Lane	1.00		0.88	0.19		1.00	1.00		0.02	1.00		0.12
Lane Grp Cap(c), veh/h	310	0	356	215	0	163	242	2523	1258	201	2487	1219
V/C Ratio(X)	0.36	0.00	0.30	0.20	0.00	0.64	0.51	0.62	0.62	0.28	0.61	0.62
Avail Cap(c_a), veh/h	351	0	593	417	0	350	341	2523	1258	266	2487	1219
HCM Platoon Ratio	1.00	1.00	1.00	1.00	1.00	1.00	1.00	1.00	1.00	1.33	1.33	1.33
Upstream Filter(I)	1.00	0.00	1.00	1.00	0.00	1.00	1.00	1.00	1.00	1.00	1.00	1.00
Uniform Delay (d), s/veh	46.0	0.0	45.0	55.9	0.0	58.5	8.8	12.1	12.2	10.9	3.3	3.4
Incr Delay (d2), s/veh	0.7	0.0	0.5	0.4	0.0	4.1	1.7	1.1	2.3	0.8	1.1	2.3
Initial Q Delay(d3),s/veh	0.0	0.0	0.0	0.0	0.0	0.0	0.0	0.0	0.0	0.0	0.0	0.0
%ile Back of Q (50%), veh/ln	3.4	0.0	3.2	1.4	0.0	3.7	1.1	13.4	13.7	0.6	3.4	3.9
Lane Grp Delay (d), s/veh	46.7	0.0	45.5	56.4	0.0	62.6	10.4	13.3	14.4	11.7	4.4	5.7
Lane Grp LOS	D		D	E		E	B	B	B	B	A	A
Approach Vol, veh/h		219			146			2455			2330	
Approach Delay, s/veh		46.1			60.8			13.5			5.0	
Approach LOS		D			E			B			A	
Timer												
Assigned Phs	3	8			4		1	6		5	2	
Phs Duration (G+Y+Rc), s	14.8	31.8			17.0		10.3	95.0		9.0	93.7	
Change Period (Y+Rc), s	5.5	5.5			5.5		5.5	5.5		5.5	5.5	
Max Green Setting (Gmax), s	12.5	45.5			27.5		12.5	89.5		8.5	85.5	
Max Q Clear Time (g_c+I1), s	9.3	9.2			10.6		4.7	33.5		3.3	16.0	
Green Ext Time (p_c), s	0.1	1.1			0.9		0.2	48.3		0.0	58.0	
Intersection Summary												
HCM 2010 Ctrl Delay			12.4									
HCM 2010 LOS			B									
Notes												

HCM 2010 Signalized Intersection Summary
4295: Runyon Rd & Beltline Rd

7/20/2015

Movement	EBL	EBT	EBR	WBL	WBT	WBR	NBL	NBT	NBR	SBL	SBT	SBR
Lane Configurations												
Volume (veh/h)	16	1713	39	100	1364	11	94	1	51	18	1	23
Number	1	6	16	5	2	12	7	4	14	3	8	18
Initial Q (Qb), veh	0	0	0	0	0	0	0	0	0	0	0	0
Ped-Bike Adj(A_pbT)	1.00		1.00	1.00		1.00	1.00		1.00	1.00		1.00
Parking Bus Adj	1.00	1.00	1.00	1.00	1.00	1.00	1.00	1.00	1.00	1.00	1.00	1.00
Adj Sat Flow veh/h/ln	186.3	186.3	186.3	186.3	186.3	190.0	186.3	186.3	190.0	186.3	186.3	190.0
Lanes	1	3	1	1	3	0	2	1	0	1	1	0
Cap, veh/h	353	3888	1102	324	3954	40	506	6	165	180	14	115
Arrive On Green	0.06	0.93	0.93	0.12	1.00	1.00	0.07	0.11	0.10	0.04	0.08	0.07
Sat Flow, veh/h	1774	5588	1583	1774	5522	56	3442	56	1535	1774	179	1431
Grp Volume(v), veh/h	36	1803	71	189	1058	526	140	0	113	33	0	36
Grp Sat Flow(s),veh/h/ln	1774	1863	1583	1774	1863	1853	1721	0	1592	1774	0	1610
Q Serve(g_s), s	0.7	5.5	0.5	3.4	0.0	0.0	4.4	0.0	8.9	2.2	0.0	2.7
Cycle Q Clear(g_c), s	0.7	5.5	0.5	3.4	0.0	0.0	4.4	0.0	8.9	2.2	0.0	2.7
Prop In Lane	1.00		1.00	1.00		0.03	1.00		0.96	1.00		0.89
Lane Grp Cap(c), veh/h	353	3888	1102	324	2668	1327	506	0	171	180	0	129
V/C Ratio(X)	0.10	0.46	0.06	0.58	0.40	0.40	0.28	0.00	0.66	0.18	0.00	0.28
Avail Cap(c_a), veh/h	416	3888	1102	351	2668	1327	534	0	443	270	0	473
HCM Platoon Ratio	1.33	1.33	1.33	2.00	2.00	2.00	1.00	1.00	1.00	1.00	1.00	1.00
Upstream Filter(I)	0.85	0.85	0.85	1.00	1.00	1.00	1.00	0.00	1.00	1.00	0.00	1.00
Uniform Delay (d), s/veh	4.5	1.7	1.5	4.2	0.0	0.0	44.3	0.0	56.2	50.9	0.0	56.6
Incr Delay (d2), s/veh	0.1	0.3	0.1	2.1	0.4	0.9	0.3	0.0	4.3	0.5	0.0	1.2
Initial Q Delay(d3),s/veh	0.0	0.0	0.0	0.0	0.0	0.0	0.0	0.0	0.0	0.0	0.0	0.0
%ile Back of Q (50%), veh/ln	0.2	1.5	0.2	1.1	0.2	0.3	2.0	0.0	3.9	1.0	0.0	1.2
Lane Grp Delay (d), s/veh	4.6	2.0	1.6	6.3	0.4	0.9	44.6	0.0	60.4	51.4	0.0	57.8
Lane Grp LOS	A	A	A	A	A	A	D		E	D		E
Approach Vol, veh/h		1910			1773			253			69	
Approach Delay, s/veh		2.0			1.2			51.7			54.7	
Approach LOS		A			A			D			D	
Timer												
Assigned Phs	1	6		5	2		7	4		3	8	
Phs Duration (G+Y+Rc), s	8.4	93.0		11.0	95.6		11.9	16.9		8.4	13.4	
Change Period (Y+Rc), s	5.5	5.5		5.5	5.5		5.5	5.5		5.5	5.5	
Max Green Setting (Gmax), s	7.5	87.5		7.5	87.5		7.5	33.5		9.5	35.5	
Max Q Clear Time (g_c+I1), s	2.7	7.5		5.4	2.0		6.4	10.9		4.2	4.7	
Green Ext Time (p_c), s	0.0	43.6		0.1	44.9		0.1	0.6		0.0	0.6	
Intersection Summary												
HCM 2010 Ctrl Delay			5.7									
HCM 2010 LOS			A									
Notes												

Lane Group	EBL	EBT	EBR	WBL	WBT	WBR	NBL	NBT	NBR	SBL	SBT	SBR
Lane Configurations												
Volume (vph)	113	1455	52	58	1398	45	79	127	101	63	132	158
Ideal Flow (vphpl)	1900	1900	1900	1900	1900	1900	1900	1900	1900	1900	1900	1900
Storage Length (ft)	150		0	200		0	100		140	100		120
Storage Lanes	1		0	1		0	1		1	1		0
Taper Length (ft)	25			25			25			25		
Lane Util. Factor	1.00	0.91	0.91	1.00	0.91	0.91	1.00	1.00	1.00	1.00	1.00	1.00
Frt		0.993			0.995				0.850			0.850
Flt Protected	0.950			0.950			0.950			0.950		
Satd. Flow (prot)	1770	5050	0	1770	5060	0	1770	1863	1583	1770	1863	1583
Flt Permitted	0.080			0.118			0.299			0.499		
Satd. Flow (perm)	149	5050	0	220	5060	0	557	1863	1583	930	1863	1583
Right Turn on Red			Yes			Yes			Yes			Yes
Satd. Flow (RTOR)		7			5				170			232
Link Speed (mph)		40			40			30			30	
Link Distance (ft)		907			950			997			322	
Travel Time (s)		15.5			16.2			22.7			7.3	
Peak Hour Factor	0.59	0.94	0.68	0.90	0.89	0.86	0.89	0.94	0.90	0.73	0.91	0.68
Adj. Flow (vph)	192	1548	76	64	1571	52	89	135	112	86	145	232
Shared Lane Traffic (%)												
Lane Group Flow (vph)	192	1624	0	64	1623	0	89	135	112	86	145	232
Enter Blocked Intersection	No	No	No	No	No	No	No	No	No	No	No	No
Lane Alignment	Left	Left	Right	Left	Left	Right	Left	Left	Right	Left	Left	Right
Median Width(ft)		12			12			12			12	
Link Offset(ft)		0			0			0			0	
Crosswalk Width(ft)		16			16			16			16	
Two way Left Turn Lane												
Headway Factor	1.00	1.00	1.00	1.00	1.00	1.00	1.00	1.00	1.00	1.00	1.00	1.00
Turning Speed (mph)	15		9	15		9	15		9	15		9
Number of Detectors	1	1		1	1		1	1	1	1	1	1
Detector Template												
Leading Detector (ft)	50	50		50	50		50	50	50	50	50	50
Trailing Detector (ft)	0	0		0	0		0	0	0	0	0	0
Detector 1 Position(ft)	0	0		0	0		0	0	0	0	0	0
Detector 1 Size(ft)	50	50		50	50		50	50	50	50	50	50
Detector 1 Type	Cl+Ex	Cl+Ex		Cl+Ex	Cl+Ex		Cl+Ex	Cl+Ex	Cl+Ex	Cl+Ex	Cl+Ex	Cl+Ex
Detector 1 Channel												
Detector 1 Extend (s)	0.0	0.0		0.0	0.0		0.0	0.0	0.0	0.0	0.0	0.0
Detector 1 Queue (s)	0.0	0.0		0.0	0.0		0.0	0.0	0.0	0.0	0.0	0.0
Detector 1 Delay (s)	0.0	0.0		0.0	0.0		0.0	0.0	0.0	0.0	0.0	0.0
Turn Type	pm+pt	NA		pm+pt	NA		custom	NA	Perm	pm+pt	NA	custom
Protected Phases	1	6 14		13	2 10		15	4 12		11	8 16	
Permitted Phases	6 14			2 10			4		4 12	8 16		8
Detector Phase	1	6 14		13	2 10		15	4 12	4 12	11	8 16	8
Switch Phase												
Minimum Initial (s)	4.0			4.0			4.0			4.0		4.0
Minimum Split (s)	13.0			13.0			13.0			13.0		16.0
Total Split (s)	16.0			16.0			13.0			13.0		20.0
Total Split (%)	10.0%			10.0%			8.1%			8.1%		12.5%

Lane Group	ø2	ø4	ø6	ø10	ø12	ø14	ø16
Lane Configurations							
Volume (vph)							
Ideal Flow (vphpl)							
Storage Length (ft)							
Storage Lanes							
Taper Length (ft)							
Lane Util. Factor							
Frt							
Flt Protected							
Satd. Flow (prot)							
Flt Permitted							
Satd. Flow (perm)							
Right Turn on Red							
Satd. Flow (RTOR)							
Link Speed (mph)							
Link Distance (ft)							
Travel Time (s)							
Peak Hour Factor							
Adj. Flow (vph)							
Shared Lane Traffic (%)							
Lane Group Flow (vph)							
Enter Blocked Intersection							
Lane Alignment							
Median Width(ft)							
Link Offset(ft)							
Crosswalk Width(ft)							
Two way Left Turn Lane							
Headway Factor							
Turning Speed (mph)							
Number of Detectors							
Detector Template							
Leading Detector (ft)							
Trailing Detector (ft)							
Detector 1 Position(ft)							
Detector 1 Size(ft)							
Detector 1 Type							
Detector 1 Channel							
Detector 1 Extend (s)							
Detector 1 Queue (s)							
Detector 1 Delay (s)							
Turn Type							
Protected Phases	2	4	6	10	12	14	16
Permitted Phases							
Detector Phase							
Switch Phase							
Minimum Initial (s)	4.0	4.0	4.0	4.0	4.0	4.0	4.0
Minimum Split (s)	29.5	16.0	24.5	22.0	22.0	22.0	22.0
Total Split (s)	35.0	20.0	51.0	56.0	20.0	40.0	20.0
Total Split (%)	22%	13%	32%	35%	13%	25%	13%

Lane Group	EBL	EBT	EBR	WBL	WBT	WBR	NBL	NBT	NBR	SBL	SBT	SBR
Maximum Green (s)	10.5			10.5			7.5			7.5		14.5
Yellow Time (s)	3.5			3.5			3.5			3.5		3.5
All-Red Time (s)	2.0			2.0			2.0			2.0		2.0
Lost Time Adjust (s)	-2.5			-2.5			-3.0			-2.5		-2.5
Total Lost Time (s)	3.0			3.0			2.5			3.0		3.0
Lead/Lag	Lead			Lead			Lead			Lead		
Lead-Lag Optimize?	Yes			Yes			Yes			Yes		
Vehicle Extension (s)	3.0			3.0			3.0			3.0		3.0
Recall Mode	None			None			None			None		None
Walk Time (s)												5.0
Flash Dont Walk (s)												2.0
Pedestrian Calls (#/hr)												0
Act Effct Green (s)	95.1	95.1		89.1	89.1		23.8	30.1	30.1	39.9	30.1	12.9
Actuated g/C Ratio	0.59	0.59		0.56	0.56		0.15	0.19	0.19	0.25	0.19	0.08
v/c Ratio	0.87	0.54		0.30	0.58		0.55	0.39	0.26	0.30	0.41	0.68
Control Delay	70.0	11.0		15.5	11.9		51.9	32.3	1.7	25.8	32.9	18.3
Queue Delay	0.0	0.0		0.0	0.0		0.0	0.0	0.0	0.0	0.0	0.0
Total Delay	70.0	11.0		15.5	11.9		51.9	32.3	1.7	25.8	32.9	18.3
LOS	E	B		B	B		D	C	A	C	C	B
Approach Delay		17.2			12.0			27.3			24.3	
Approach LOS		B			B			C			C	

Intersection Summary	
Area Type:	Other
Cycle Length: 160	
Actuated Cycle Length: 160	
Offset: 117 (73%), Referenced to phase 2:WBTL and 6:EBTL, Start of 1st Green	
Natural Cycle: 130	
Control Type: Actuated-Coordinated	
Maximum v/c Ratio: 0.87	
Intersection Signal Delay: 16.7	Intersection LOS: B
Intersection Capacity Utilization 58.9%	ICU Level of Service B
Analysis Period (min) 15	

Splits and Phases: 4296: Surveyor Blvd & Beltline Rd

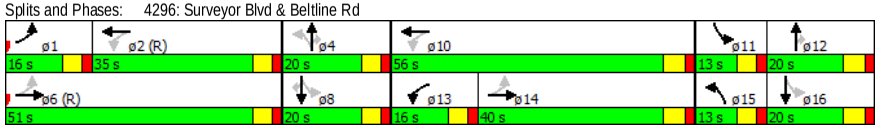

Lane Group	ø2	ø4	ø6	ø10	ø12	ø14	ø16
Maximum Green (s)	29.5	14.5	45.5	50.0	14.0	34.0	14.0
Yellow Time (s)	3.5	3.5	3.5	4.0	4.0	4.0	4.0
All-Red Time (s)	2.0	2.0	2.0	2.0	2.0	2.0	2.0
Lost Time Adjust (s)							
Total Lost Time (s)							
Lead/Lag	Lag				Lag	Lag	Lag
Lead-Lag Optimize?	Yes						
Vehicle Extension (s)	3.0	3.0	3.0	3.0	3.0	3.0	3.0
Recall Mode	C-Max	Min	C-Max	Max	Min	None	Max
Walk Time (s)	5.0	5.0	5.0	5.0	5.0	5.0	5.0
Flash Dont Walk (s)	19.0	24.0	14.0	11.0	11.0	11.0	11.0
Pedestrian Calls (#/hr)	0	0	0	0	0	0	0
Act Effct Green (s)							
Actuated g/C Ratio							
v/c Ratio							
Control Delay							
Queue Delay							
Total Delay							
LOS							
Approach Delay							
Approach LOS							

Intersection Summary

HCM 2010 TWSC
2: Northeast Drive & Beltline Rd

7/20/2015

Intersection	
Intersection Delay, s/veh	0.8

Movement	EBT	EBR	WBL	WBT	NBL	NBR
Vol, veh/h	1720	15	0	0	0	54
Conflicting Peds, #/hr	0	0	0	0	0	0
Sign Control	Free	Free	Free	Free	Stop	Stop
RT Channelized	-	None	-	None	-	None
Storage Length	-	140	-	-	-	0
Veh in Median Storage, #	0	-	-	0	0	-
Grade, %	0	-	-	0	0	-
Peak Hour Factor	92	92	92	92	92	92
Heavy Vehicles, %	2	2	2	2	2	2
Mvmt Flow	1870	16	0	0	0	59

Major/Minor	Major1		Major2		Minor1	
Conflicting Flow All	0	0	1870	0	1870	935
Stage 1	-	-	-	-	1870	-
Stage 2	-	-	-	-	0	-
Follow-up Headway	-	-	3.12	-	3.82	3.92
Pot Capacity-1 Maneuver	-	-	146	-	110	229
Stage 1	-	-	-	-	69	-
Stage 2	-	-	-	-	-	-
Time blocked-Platoon, %	-	-		-		
Mov Capacity-1 Maneuver	-	-	146	-	110	229
Mov Capacity-2 Maneuver	-	-	-	-	110	-
Stage 1	-	-	-	-	69	-
Stage 2	-	-	-	-	-	-

Approach	EB	WB	NB
HCM Control Delay, s	0	0	26.1
HCM LOS			D

Minor Lane / Major Mvmt	NBLn1	EBT	EBR	WBL	WBT
Capacity (veh/h)	229	-	-	146	-
HCM Lane V/C Ratio	0.256	-	-	-	-
HCM Control Delay (s)	26.1	-	-	0	-
HCM Lane LOS	D			A	
HCM 95th %tile Q(veh)	0.988	-	-	0	-

Notes

~ : Volume Exceeds Capacity; $: Delay Exceeds 300 Seconds; Error : Computation Not Defined

HCM 2010 TWSC
4: Midway Rd & East Drive

7/20/2015

Intersection	
Intersection Delay, s/veh	0.4

Movement	EBL	EBR	NBL	NBT	SBT	SBR
Vol, veh/h	1	15	24	2205	1873	7
Conflicting Peds, #/hr	0	0	0	0	0	0
Sign Control	Stop	Stop	Free	Free	Free	Free
RT Channelized	-	None	-	None	-	None
Storage Length	0	-	125	-	-	-
Veh in Median Storage, #	0	-	-	0	0	-
Grade, %	0	-	-	0	0	-
Peak Hour Factor	92	92	92	92	92	92
Heavy Vehicles, %	2	2	2	2	2	2
Mvmt Flow	1	16	26	2397	2036	8

Major/Minor	Minor2		Major1		Major2	
Conflicting Flow All	3081	1022	2043	0	-	0
Stage 1	2070	-	-	-	-	-
Stage 2	1011	-	-	-	-	-
Follow-up Headway	3.82	3.92	3.12	-	-	-
Pot Capacity-1 Maneuver	24	201	119	-	-	-
Stage 1	51	-	-	-	-	-
Stage 2	282	-	-	-	-	-
Time blocked-Platoon, %				-	-	-
Mov Capacity-1 Maneuver	19	201	119	-	-	-
Mov Capacity-2 Maneuver	19	-	-	-	-	-
Stage 1	51	-	-	-	-	-
Stage 2	220	-	-	-	-	-

Approach	EB	NB	SB
HCM Control Delay, s	38.1	0.5	0
HCM LOS	E		

Minor Lane / Major Mvmt	NBL	NBT	EBLn1	SBU	SBT	SBR
Capacity (veh/h)	119	-	126	-	-	-
HCM Lane V/C Ratio	0.219	-	0.138	-	-	-
HCM Control Delay (s)	43.55	-	38.1	-	-	-
HCM Lane LOS	E		E			
HCM 95th %tile Q(veh)	0.789	-	0.464	-	-	-

Notes

~ : Volume Exceeds Capacity; $: Delay Exceeds 300 Seconds; Error : Computation Not Defined

Intersection	
Intersection Delay, s/veh	42.1

Movement	EBL	EBT	EBR	WBL	WBT	WBR	NBL	NBT	NBR	SBL	SBT	SBR
Vol, veh/h	1	0	4	12	0	104	18	2527	29	30	1790	8
Conflicting Peds, #/hr	0	0	0	0	0	0	0	0	0	0	0	0
Sign Control	Stop	Stop	Stop	Stop	Stop	Stop	Free	Free	Free	Free	Free	Free
RT Channelized	-	-	None	-	-	None	-	-	None	-	-	None
Storage Length	-	-	-	-	-	0	130	-	-	125	-	-
Veh in Median Storage, #	-	0	-	-	0	-	-	0	-	-	0	-
Grade, %	-	0	-	-	0	-	-	0	-	-	0	-
Peak Hour Factor	92	92	92	92	92	92	92	92	92	92	92	92
Heavy Vehicles, %	2	2	2	2	2	2	2	2	2	2	2	2
Mvmt Flow	1	0	4	13	0	113	20	2747	32	33	1946	9

Major/Minor	Minor2			Minor1			Major1			Major2		
Conflicting Flow All	3153	4832	977	3645	4822	1389	1954	0	0	2778	0	0
Stage 1	2015	2015	-	2802	2802	-	-	-	-	-	-	-
Stage 2	1138	2817	-	843	2020	-	-	-	-	-	-	-
Follow-up Headway	3.82	4.02	3.92	3.82	4.02	3.92	3.12	-	-	3.12	-	-
Pot Capacity-1 Maneuver	12	1	215	# 5	1	# 113	132	-	-	50	-	-
Stage 1	38	101	-	# 10	39	-	-	-	-	-	-	-
Stage 2	193	39	-	294	101	-	-	-	-	-	-	-
Time blocked-Platoon, %								-	-		-	-
Mov Capacity-1 Maneuver	-	0	215	# 2	0	# 113	132	-	-	50	-	-
Mov Capacity-2 Maneuver	-	0	-	# 2	0	-	-	-	-	-	-	-
Stage 1	32	34	-	# 8	33	-	-	-	-	-	-	-
Stage 2	-	33	-	98	34	-	-	-	-	-	-	-

Approach	EB	WB	NB	SB
HCM Control Delay, s	+	$ 1594	0.3	2.7
HCM LOS	-	F		

Minor Lane / Major Mvmt	NBL	NBT	NBR	EBLn1	WBLn1	WBLn2	SBL	SBT	SBR
Capacity (veh/h)	132	-	-	+	7	113	50	-	-
HCM Lane V/C Ratio	0.148	-	-	+	7.246	0.667	0.652	-	-
HCM Control Delay (s)	36.961	-	-	+	$ 3835.8	85.1	163.831	-	-
HCM Lane LOS	E			+	F	F	F		
HCM 95th %tile Q(veh)	0.504	-	-	+	7.88	3.461	2.575	-	-

Notes

~ : Volume Exceeds Capacity; $: Delay Exceeds 300 Seconds; Error : Computation Not Defined

Intersection	
Intersection Delay, s/veh	3.3

Movement	EBL	EBT	WBT	WBR	SBL	SBR
Vol, veh/h	7	0	0	75	36	4
Conflicting Peds, #/hr	0	0	0	0	0	0
Sign Control	Free	Free	Free	Free	Stop	Stop
RT Channelized	-	None	-	None	-	None
Storage Length	-	-	-	-	0	-
Veh in Median Storage, #	-	0	0	-	0	-
Grade, %	-	0	0	-	0	-
Peak Hour Factor	92	92	92	92	92	92
Heavy Vehicles, %	2	2	2	2	2	2
Mvmt Flow	8	0	0	82	39	4

Major/Minor	Major1		Major2		Minor2	
Conflicting Flow All	82	0	-	0	56	41
Stage 1	-	-	-	-	41	-
Stage 2	-	-	-	-	15	-
Follow-up Headway	2.218	-	-	-	3.518	3.318
Pot Capacity-1 Maneuver	1515	-	-	-	952	1030
Stage 1	-	-	-	-	981	-
Stage 2	-	-	-	-	1008	-
Time blocked-Platoon, %		-	-	-		
Mov Capacity-1 Maneuver	1515	-	-	-	947	1030
Mov Capacity-2 Maneuver	-	-	-	-	947	-
Stage 1	-	-	-	-	981	-
Stage 2	-	-	-	-	1003	-

Approach	EB	WB	SB
HCM Control Delay, s	7.4	0	8.9
HCM LOS			A

Minor Lane / Major Mvmt	EBL	EBT	WBT	WBR	SBLn1
Capacity (veh/h)	1515	-	-	-	955
HCM Lane V/C Ratio	0.005	-	-	-	0.046
HCM Control Delay (s)	7.388	0	-	-	8.9
HCM Lane LOS	A	A			A
HCM 95th %tile Q(veh)	0.015	-	-	-	0.143

Notes

~ : Volume Exceeds Capacity; $: Delay Exceeds 300 Seconds; Error : Computation Not Defined

Two Way Analysis cannot be performed on an All Way Stop Intersection.

Intersection	
Intersection Delay, s/veh	5.6

Movement	EBL	EBT	EBR	WBL	WBT	WBR	NBL	NBT	NBR	SBL	SBT	SBR
Vol, veh/h	29	1651	42	138	1466	6	0	0	86	0	0	17
Conflicting Peds, #/hr	0	0	0	0	0	0	0	0	0	0	0	0
Sign Control	Free	Free	Free	Free	Free	Free	Stop	Stop	Stop	Stop	Stop	Stop
RT Channelized	-	-	None	-	-	None	-	-	None	-	-	None
Storage Length	160	-	160	175	-	-	-	-	0	-	-	0
Veh in Median Storage, #	-	0	-	-	0	-	-	0	-	-	0	-
Grade, %	-	0	-	-	0	-	-	0	-	-	0	-
Peak Hour Factor	92	92	92	92	92	92	92	92	92	92	92	92
Heavy Vehicles, %	2	2	2	2	2	2	2	2	2	2	2	2
Mvmt Flow	32	1795	46	150	1593	7	0	0	93	0	0	18

Major/Minor	Major1			Major2			Minor1			Minor2		
Conflicting Flow All	1600	0	0	1795	0	0	2795	3758	897	2678	3755	800
Stage 1	-	-	-	-	-	-	1858	1858	-	1897	1897	-
Stage 2	-	-	-	-	-	-	937	1900	-	781	1858	-
Follow-up Headway	3.12	-	-	3.12	-	-	3.82	4.02	3.92	3.82	4.02	3.92
Pot Capacity-1 Maneuver	199	-	-	159	-	-	20	4	243	24	4	281
Stage 1	-	-	-	-	-	-	49	122	-	46	116	-
Stage 2	-	-	-	-	-	-	257	116	-	321	122	-
Time blocked-Platoon, %		-	-		-	-						
Mov Capacity-1 Maneuver	199	-	-	159	-	-	3	0	243	2	0	281
Mov Capacity-2 Maneuver	-	-	-	-	-	-	3	0	-	2	0	-
Stage 1	-	-	-	-	-	-	41	102	-	39	7	-
Stage 2	-	-	-	-	-	-	14	7	-	166	102	-

Approach	EB	WB	NB	SB
HCM Control Delay, s	0.4	9.8	28.8	18.7
HCM LOS			D	C

Minor Lane / Major Mvmt	NBLn1	EBL	EBT	EBR	WBL	WBT	WBR	SBLn1
Capacity (veh/h)	243	199	-	-	159	-	-	281
HCM Lane V/C Ratio	0.385	0.158	-	-	0.943	-	-	0.066
HCM Control Delay (s)	28.8	26.465	-	-	113.77	-	-	18.7
HCM Lane LOS	D	D			F			C
HCM 95th %tile Q(veh)	1.718	0.55	-	-	6.959	-	-	0.21

Notes

~ : Volume Exceeds Capacity; $: Delay Exceeds 300 Seconds; Error : Computation Not Defined

Intersection	
Intersection Delay, s/veh	10.1
Intersection LOS	B

Movement	EBL	EBT	EBR	WBL	WBT	WBR	NBL	NBT	NBR	SBL	SBT	SBR
Vol, veh/h	13	14	3	48	19	183	2	113	78	97	113	14
Peak Hour Factor	0.92	0.92	0.92	0.92	0.92	0.92	0.92	0.92	0.92	0.92	0.92	0.92
Heavy Vehicles, %	2	2	2	2	2	2	2	2	2	2	2	2
Mvmt Flow	14	15	3	52	21	199	2	123	85	105	123	15
Number of Lanes	0	1	0	0	1	0	0	1	0	0	1	0

Approach	EB	WB	NB	SB
Opposing Approach	WB	EB	SB	NB
Opposing Lanes	1	1	1	1
Conflicting Approach Left	SB	NB	EB	WB
Conflicting Lanes Left	1	1	1	1
Conflicting Approach Right	NB	SB	WB	EB
Conflicting Lanes Right	1	1	1	1
HCM Control Delay	8.8	10.3	9.6	10.6
HCM LOS	A	B	A	B

Lane	NBLn1	EBLn1	WBLn1	SBLn1
Vol Left, %	1%	43%	19%	43%
Vol Thru, %	59%	47%	8%	50%
Vol Right, %	40%	10%	73%	6%
Sign Control	Stop	Stop	Stop	Stop
Traffic Vol by Lane	193	30	250	224
LT Vol	113	14	19	113
Through Vol	78	3	183	14
RT Vol	2	13	48	97
Lane Flow Rate	210	33	272	243
Geometry Grp	1	1	1	1
Degree of Util (X)	0.276	0.05	0.351	0.336
Departure Headway (Hd)	4.728	5.514	4.652	4.961
Convergence, Y/N	Yes	Yes	Yes	Yes
Cap	751	653	766	718
Service Time	2.809	3.514	2.724	3.041
HCM Lane V/C Ratio	0.28	0.051	0.355	0.338
HCM Control Delay	9.6	8.8	10.3	10.6
HCM Lane LOS	A	A	B	B
HCM 95th-tile Q	1.1	0.2	1.6	1.5

Notes

~ : Volume Exceeds Capacity; $: Delay Exceeds 300 Seconds; Error : Computation Not Defined

Synchro^{TM} Output – 2035 Background Traffic

HCM 2010 Signalized Intersection Summary
4278: Midway Rd & Lindbergh Dr

7/20/2015

Movement	EBL	EBT	EBR	WBL	WBT	WBR	NBL	NBT	NBR	SBL	SBT	SBR
Lane Configurations												
Volume (veh/h)	20	11	8	21	20	178	45	1195	55	237	2671	65
Number	3	8	18	7	4	14	1	6	16	5	2	12
Initial Q (Qb), veh	0	0	0	0	0	0	0	0	0	0	0	0
Ped-Bike Adj(A_pbT)	1.00		1.00	1.00		1.00	1.00		1.00	1.00		1.00
Parking Bus Adj	1.00	1.00	1.00	1.00	1.00	1.00	1.00	1.00	1.00	1.00	1.00	1.00
Adj Sat Flow veh/h/ln	186.3	186.3	190.0	186.3	193.7	186.3	186.3	186.3	190.0	186.3	186.3	190.0
Lanes	1	1	0	1	1	1	1	3	0	1	3	0
Cap, veh/h	296	161	129	334	328	268	137	3263	162	468	3598	87
Arrive On Green	0.04	0.17	0.16	0.04	0.17	0.17	0.09	1.00	1.00	0.09	0.66	0.65
Sat Flow, veh/h	1774	960	768	1774	1937	1583	1774	5279	263	1774	5434	131
Grp Volume(v), veh/h	29	0	27	32	27	217	69	879	428	312	2280	1140
Grp Sat Flow(s),veh/h/ln	1774	0	1727	1774	1937	1583	1774	1863	1816	1774	1863	1840
Q Serve(g_s), s	1.8	0.0	1.8	2.0	1.6	18.3	1.9	0.0	0.0	7.0	74.1	76.5
Cycle Q Clear(g_c), s	1.8	0.0	1.8	2.0	1.6	18.3	1.9	0.0	0.0	7.0	74.1	76.5
Prop In Lane	1.00		0.44	1.00		1.00	1.00		0.14	1.00		0.07
Lane Grp Cap(c), veh/h	296	0	290	334	328	268	137	2303	1123	468	2467	1218
V/C Ratio(X)	0.10	0.00	0.09	0.10	0.08	0.81	0.50	0.38	0.38	0.67	0.92	0.94
Avail Cap(c_a), veh/h	358	0	385	393	432	353	249	2303	1123	592	2467	1218
HCM Platoon Ratio	1.00	1.00	1.00	1.00	1.00	1.00	2.00	2.00	2.00	1.00	1.00	1.00
Upstream Filter(I)	1.00	0.00	1.00	1.00	1.00	1.00	1.00	1.00	1.00	1.00	1.00	1.00
Uniform Delay (d), s/veh	44.6	0.0	49.1	44.4	48.6	55.5	32.5	0.0	0.0	5.6	20.4	20.9
Incr Delay (d2), s/veh	0.1	0.0	0.1	0.1	0.1	10.1	2.8	0.5	1.0	2.0	7.3	14.4
Initial Q Delay(d3),s/veh	0.0	0.0	0.0	0.0	0.0	0.0	0.0	0.0	0.0	0.0	0.0	0.0
%ile Back of Q (50%), veh/ln	0.8	0.0	0.8	0.9	0.8	8.3	2.4	0.2	0.3	2.6	33.2	36.2
Lane Grp Delay (d), s/veh	44.7	0.0	49.3	44.5	48.7	65.6	35.3	0.5	1.0	7.5	27.8	35.3
Lane Grp LOS	D		D	D	D	E	D	A	A	A	C	D
Approach Vol, veh/h		56			276			1376			3732	
Approach Delay, s/veh		46.9			61.5			2.4			28.4	
Approach LOS		D			E			A			C	

Timer												
Assigned Phs	3	8		7	4		1	6		5	2	
Phs Duration (G+Y+Rc), s	8.2	26.4		8.4	26.5		9.2	88.9		15.3	95.0	
Change Period (Y+Rc), s	5.5	5.5		5.5	5.5		5.5	5.5		5.5	5.5	
Max Green Setting (Gmax), s	7.5	28.5		7.5	28.5		12.5	82.5		19.5	89.5	
Max Q Clear Time (g_c+I1), s	3.8	3.8		4.0	20.3		3.9	2.0		9.0	78.5	
Green Ext Time (p_c), s	0.0	1.2		0.0	0.7		0.1	70.7		0.9	10.7	

Intersection Summary												
HCM 2010 Ctrl Delay			23.7									
HCM 2010 LOS			C									

Notes

HCM 2010 Signalized Intersection Summary
4287: Beltway Dr & Beltline Rd

7/20/2015

Movement	EBU	EBT	EBR	WBL	WBT	NBL	NBR
Lane Configurations							
Volume (veh/h)	2	1905	21	118	1678	9	80
Number		6	16	5	2	7	14
Initial Q (Qb), veh		0	0	0	0	0	0
Ped-Bike Adj(A_pbT)			1.00	1.00		1.00	1.00
Parking Bus Adj		1.00	1.00	1.00	1.00	1.00	1.00
Adj Sat Flow veh/h/ln		186.3	190.0	186.3	186.3	186.3	186.3
Lanes		3	0	1	3	1	2
Cap, veh/h		4348	60	209	4969	116	206
Arrive On Green		0.79	0.78	0.08	0.89	0.07	0.07
Sat Flow, veh/h		5499	76	1774	5588	1774	3167
Grp Volume(v), veh/h		1330	661	151	1730	14	94
Grp Sat Flow(s),veh/h/ln		1863	1849	1774	1863	1774	1583
Q Serve(g_s), s		15.3	15.3	5.3	6.5	1.0	3.8
Cycle Q Clear(g_c), s		15.3	15.3	5.3	6.5	1.0	3.8
Prop In Lane			0.04	1.00		1.00	1.00
Lane Grp Cap(c), veh/h		2946	1462	209	4969	116	206
V/C Ratio(X)		0.45	0.45	0.72	0.35	0.12	0.46
Avail Cap(c_a), veh/h		2946	1462	277	4969	432	770
HCM Platoon Ratio		1.00	1.00	1.00	1.00	1.00	1.00
Upstream Filter(I)		1.00	1.00	1.00	1.00	1.00	1.00
Uniform Delay (d), s/veh		4.5	4.5	54.3	1.2	57.9	59.2
Incr Delay (d2), s/veh		0.5	1.0	6.2	0.2	0.5	1.6
Initial Q Delay(d3),s/veh		0.0	0.0	0.0	0.0	0.0	0.0
%ile Back of Q (50%), veh/ln		5.6	5.7	4.9	1.4	0.5	0.0
Lane Grp Delay (d), s/veh		5.0	5.5	60.5	1.4	58.4	60.8
Lane Grp LOS		A	A	E	A	E	E
Approach Vol, veh/h		1991			1881	108	
Approach Delay, s/veh		5.2			6.1	60.5	
Approach LOS		A			A	E	

Timer							
Assigned Phs		6		5	2		
Phs Duration (G+Y+Rc), s		107.0		13.0	120.0		
Change Period (Y+Rc), s		5.5		5.5	5.5		
Max Green Setting (Gmax), s		101.5		12.5	106.5		
Max Q Clear Time (g_c+I1), s		17.3		7.3	8.5		
Green Ext Time (p_c), s		51.5		0.2	55.9		

Intersection Summary							
HCM 2010 Ctrl Delay			7.1				
HCM 2010 LOS			A				

Notes

HCM 2010 Signalized Intersection Summary
4288: Midway Rd & Beltline Rd

7/20/2015

Movement	EBL	EBT	EBR	WBL	WBT	WBR	NBL	NBT	NBR	SBL	SBT	SBR
Lane Configurations												
Volume (veh/h)	148	1090	301	340	902	372	144	686	261	539	1923	156
Number	1	6	16	5	2	12	7	4	14	3	8	18
Initial Q (Qb), veh	0	0	0	0	0	0	0	0	0	0	0	0
Ped-Bike Adj(A_pbT)	1.00		1.00	1.00		1.00	1.00		1.00	1.00		1.00
Parking Bus Adj	1.00	1.00	1.00	1.00	1.00	1.00	1.00	1.00	1.00	1.00	1.00	1.00
Adj Sat Flow veh/h/ln	186.3	186.3	186.3	186.3	186.3	190.0	186.3	186.3	186.3	186.3	186.3	186.3
Lanes	2	3	1	2	3	0	2	3	1	2	3	1
Cap, veh/h	258	1502	426	559	1327	564	258	1886	534	538	2340	663
Arrive On Green	0.15	0.54	0.54	0.16	0.36	0.34	0.15	0.68	0.00	0.31	0.84	0.00
Sat Flow, veh/h	3442	5588	1583	3442	3725	1583	3442	5588	1583	3442	5588	1583
Grp Volume(v), veh/h	251	1147	381	347	980	418	166	754	0	573	2262	0
Grp Sat Flow(s),veh/h/ln	1721	1863	1583	1721	1863	1583	1721	1863	1583	1721	1863	1583
Q Serve(g_s), s	11.6	25.8	34.3	15.0	36.8	37.2	7.3	9.6	0.0	25.0	55.3	0.0
Cycle Q Clear(g_c), s	11.6	25.8	34.3	15.0	36.8	37.2	7.3	9.6	0.0	25.0	55.3	0.0
Prop In Lane	1.00		1.00	1.00		1.00	1.00		1.00	1.00		1.00
Lane Grp Cap(c), veh/h	258	1502	426	559	1327	564	258	1886	534	538	2340	663
V/C Ratio(X)	0.97	0.76	0.90	0.62	0.74	0.74	0.64	0.40	0.00	1.07	0.97	0.00
Avail Cap(c_a), veh/h	258	1502	426	559	1327	564	258	1886	534	538	2340	663
HCM Platoon Ratio	2.00	2.00	2.00	1.00	1.00	1.00	2.00	2.00	2.00	2.00	2.00	2.00
Upstream Filter(I)	1.00	1.00	1.00	1.00	1.00	1.00	1.00	1.00	0.00	1.00	1.00	0.00
Uniform Delay (d), s/veh	67.8	33.0	35.0	62.4	45.0	46.0	66.0	18.8	0.0	55.0	12.0	0.0
Incr Delay (d2), s/veh	49.4	3.7	24.0	5.1	3.7	8.5	11.7	0.6	0.0	57.4	12.3	0.0
Initial Q Delay(d3),s/veh	0.0	0.0	0.0	0.0	0.0	0.0	0.0	0.0	0.0	0.0	0.0	0.0
%ile Back of Q (50%), veh/ln	6.6	10.5	14.1	7.1	18.0	16.3	3.5	3.6	0.0	14.1	11.5	0.0
Lane Grp Delay (d), s/veh	117.2	36.8	59.0	67.5	48.7	54.5	77.7	19.4	0.0	112.4	24.3	0.0
Lane Grp LOS	F	D	E	E	D	D	E	B		F	C	
Approach Vol, veh/h		1779			1745			920			2835	
Approach Delay, s/veh		52.9			53.8			29.9			42.1	
Approach LOS		D			D			C			D	

Timer												
Assigned Phs	1	6		5	2		7	4		3	8	
Phs Duration (G+Y+Rc), s	15.0	46.0		29.0	60.0		15.0	57.0		28.0	70.0	
Change Period (Y+Rc), s	6.0	6.0		6.0	6.0		6.0	6.0		6.0	6.0	
Max Green Setting (Gmax), s	9.0	40.0		23.0	54.0		9.0	51.0		22.0	64.0	
Max Q Clear Time (g_c+I1), s	13.6	36.3		17.0	39.2		9.3	11.6		27.0	57.3	
Green Ext Time (p_c), s	0.0	2.7		0.8	6.0		0.0	3.8		0.0	5.9	

Intersection Summary												
HCM 2010 Ctrl Delay			46.0									
HCM 2010 LOS			D									

Notes

HCM 2010 Signalized Intersection Summary
4289: Midway Rd & Beltway Dr

7/20/2015

Movement	EBL	EBT	EBR	WBL	WBT	WBR	NBL	NBT	NBR	SBL	SBT	SBR
Lane Configurations												
Volume (veh/h)	36	42	94	37	10	54	48	1027	33	47	2419	36
Number	3	8	18	7	4	14	1	6	16	5	2	12
Initial Q (Qb), veh	0	0	0	0	0	0	0	0	0	0	0	0
Ped-Bike Adj(A_pbT)	1.00		1.00	1.00		1.00	1.00		1.00	1.00		1.00
Parking Bus Adj	1.00	1.00	1.00	1.00	1.00	1.00	1.00	1.00	1.00	1.00	1.00	1.00
Adj Sat Flow veh/h/ln	186.3	193.7	186.3	186.3	193.7	190.0	186.3	186.3	186.3	186.3	193.7	186.3
Lanes	1	1	1	1	1	0	1	3	1	1	3	1
Cap, veh/h	247	226	185	266	29	160	199	3801	1077	491	3964	1080
Arrive On Green	0.06	0.12	0.12	0.06	0.11	0.10	0.09	1.00	1.00	0.10	1.00	1.00
Sat Flow, veh/h	1774	1937	1583	1774	256	1429	1774	5588	1583	1774	5812	1583
Grp Volume(v), veh/h	64	61	118	56	0	92	49	1059	43	60	2880	44
Grp Sat Flow(s),veh/h/ln	1774	1937	1583	1774	0	1685	1774	1863	1583	1774	1937	1583
Q Serve(g_s), s	3.8	3.5	8.8	3.3	0.0	6.4	0.9	0.0	0.0	1.1	0.0	0.0
Cycle Q Clear(g_c), s	3.8	3.5	8.8	3.3	0.0	6.4	0.9	0.0	0.0	1.1	0.0	0.0
Prop In Lane	1.00		1.00	1.00		0.85	1.00		1.00	1.00		1.00
Lane Grp Cap(c), veh/h	247	226	185	266	0	189	199	3801	1077	491	3964	1080
V/C Ratio(X)	0.26	0.27	0.64	0.21	0.00	0.49	0.25	0.28	0.04	0.12	0.73	0.04
Avail Cap(c_a), veh/h	309	659	538	336	0	573	260	3801	1077	548	3964	1080
HCM Platoon Ratio	1.00	1.00	1.00	1.00	1.00	1.00	2.00	2.00	2.00	2.00	2.00	2.00
Upstream Filter(I)	1.00	1.00	1.00	1.00	0.00	1.00	1.00	1.00	1.00	1.00	1.00	1.00
Uniform Delay (d), s/veh	43.4	49.7	52.1	44.0	0.0	52.1	4.5	0.0	0.0	4.4	0.0	0.0
Incr Delay (d2), s/veh	0.5	0.6	3.6	0.4	0.0	1.9	0.6	0.2	0.1	0.1	1.2	0.1
Initial Q Delay(d3),s/veh	0.0	0.0	0.0	0.0	0.0	0.0	0.0	0.0	0.0	0.0	0.0	0.0
%ile Back of Q (50%), veh/ln	1.8	1.8	3.8	1.6	0.0	2.9	0.3	0.1	0.0	0.4	0.4	0.0
Lane Grp Delay (d), s/veh	43.9	50.4	55.7	44.4	0.0	54.1	5.1	0.2	0.1	4.5	1.2	0.1
Lane Grp LOS	D	D	E	D		D	A	A	A	A	A	A
Approach Vol, veh/h		243			148			1151			2984	
Approach Delay, s/veh		51.3			50.4			0.4			1.2	
Approach LOS		D			D			A			A	

Timer												
Assigned Phs	3	8		7	4		1	6		5	2	
Phs Duration (G+Y+Rc), s	10.7	17.4		10.1	16.8		8.8	87.0		9.0	87.2	
Change Period (Y+Rc), s	5.5	5.5		5.5	5.5		5.5	5.5		5.5	5.5	
Max Green Setting (Gmax), s	9.5	39.5		9.5	39.5		7.5	81.5		7.5	81.5	
Max Q Clear Time (g_c+I1), s	5.8	10.8		5.3	8.4		2.9	2.0		3.1	2.0	
Green Ext Time (p_c), s	0.0	1.1		0.0	1.2		0.0	61.9		0.0	61.9	

Intersection Summary												
HCM 2010 Ctrl Delay			5.3									
HCM 2010 LOS			A									

Notes

HCM 2010 Signalized Intersection Summary
4290: Midway Rd & Proton Dr

7/20/2015

Movement	EBL	EBT	EBR	WBL	WBT	WBR	NBL	NBT	NBR	SBL	SBT	SBR
Lane Configurations												
Volume (veh/h)	80	27	177	3	8	32	38	1080	12	234	2135	84
Number	3	8	18	7	4	14	1	6	16	5	2	12
Initial Q (Qb), veh	0	0	0	0	0	0	0	0	0	0	0	0
Ped-Bike Adj(A_pbT)	1.00		1.00	1.00		1.00	1.00		1.00	1.00		1.00
Parking Bus Adj	1.00	1.00	1.00	1.00	1.00	1.00	1.00	1.00	1.00	1.00	1.00	1.00
Adj Sat Flow veh/h/ln	186.3	193.7	190.0	190.0	186.3	186.3	186.3	186.3	190.0	186.3	186.3	190.0
Lanes	1	1	0	0	1	1	1	3	0	1	3	0
Cap, veh/h	257	86	266	51	124	163	190	3487	55	455	3655	148
Arrive On Green	0.08	0.21	0.21	0.10	0.10	0.10	0.04	0.64	0.62	0.18	1.00	1.00
Sat Flow, veh/h	1774	419	1291	170	1207	1583	1774	5487	86	1774	5335	215
Grp Volume(v), veh/h	101	0	290	16	0	35	39	824	408	312	1854	924
Grp Sat Flow(s),veh/h/ln	1774	0	1709	1377	0	1583	1774	1863	1848	1774	1863	1825
Q Serve(g_s), s	6.5	0.0	21.8	0.0	0.0	2.7	1.0	13.9	13.9	6.9	0.0	0.0
Cycle Q Clear(g_c), s	6.5	0.0	21.8	7.9	0.0	2.7	1.0	13.9	13.9	6.9	0.0	0.0
Prop In Lane	1.00		0.76	0.25		1.00	1.00		0.05	1.00		0.12
Lane Grp Cap(c), veh/h	257	0	353	175	0	163	190	2368	1174	455	2552	1250
V/C Ratio(X)	0.39	0.00	0.82	0.09	0.00	0.21	0.21	0.35	0.35	0.69	0.73	0.74
Avail Cap(c_a), veh/h	311	0	611	366	0	354	262	2368	1174	584	2552	1250
HCM Platoon Ratio	1.00	1.00	1.00	1.00	1.00	1.00	1.00	1.00	1.00	2.00	2.00	2.00
Upstream Filter(I)	1.00	0.00	1.00	1.00	0.00	1.00	1.00	1.00	1.00	1.00	1.00	1.00
Uniform Delay (d), s/veh	46.1	0.0	50.9	54.5	0.0	55.2	7.2	11.4	11.5	7.8	0.0	0.0
Incr Delay (d2), s/veh	1.0	0.0	4.8	0.2	0.0	0.7	0.5	0.4	0.8	2.3	1.8	3.9
Initial Q Delay(d3),s/veh	0.0	0.0	0.0	0.0	0.0	0.0	0.0	0.0	0.0	0.0	0.0	0.0
%ile Back of Q (50%), veh/ln	3.1	0.0	10.1	0.5	0.0	1.1	0.4	6.0	6.1	3.2	0.7	1.4
Lane Grp Delay (d), s/veh	47.1	0.0	55.7	54.7	0.0	55.9	7.7	11.9	12.3	10.1	1.8	3.9
Lane Grp LOS	D		E	D		E	A	B	B	B	A	A
Approach Vol, veh/h		391			51			1271			3090	
Approach Delay, s/veh		53.5			55.5			11.9			3.3	
Approach LOS		D			E			B			A	

Timer												
Assigned Phs	3	8			4		1	6		5	2	
Phs Duration (G+Y+Rc), s	13.9	30.7			16.8		8.6	88.3		15.2	95.0	
Change Period (Y+Rc), s	5.5	5.5			5.5		5.5	5.5		5.5	5.5	
Max Green Setting (Gmax), s	12.5	45.5			27.5		8.5	78.5		19.5	89.5	
Max Q Clear Time (g_c+I1), s	8.5	23.8			9.9		3.0	15.9		8.9	2.0	
Green Ext Time (p_c), s	0.1	1.4			1.4		0.0	47.3		0.9	59.8	

Intersection Summary	
HCM 2010 Ctrl Delay	10.2
HCM 2010 LOS	B

Notes

HCM 2010 Signalized Intersection Summary
4295: Runyon Rd & Beltline Rd

7/20/2015

Movement	EBL	EBT	EBR	WBL	WBT	WBR	NBL	NBT	NBR	SBL	SBT	SBR
Lane Configurations												
Volume (veh/h)	9	1539	13	23	1200	0	21	0	23	10	1	2
Number	1	6	16	5	2	12	7	4	14	3	8	18
Initial Q (Qb), veh	0	0	0	0	0	0	0	0	0	0	0	0
Ped-Bike Adj(A_pbT)	1.00		1.00	1.00		1.00	1.00		1.00	1.00		1.00
Parking Bus Adj	1.00	1.00	1.00	1.00	1.00	1.00	1.00	1.00	1.00	1.00	1.00	1.00
Adj Sat Flow veh/h/ln	186.3	186.3	186.3	186.3	186.3	190.0	186.3	186.3	190.0	186.3	186.3	190.0
Lanes	1	3	1	1	3	0	2	1	0	1	1	0
Cap, veh/h	420	4198	1189	370	4250	0	419	0	105	175	59	44
Arrive On Green	0.07	1.00	1.00	0.09	1.00	0.00	0.04	0.00	0.05	0.04	0.06	0.05
Sat Flow, veh/h	1774	5588	1583	1774	5588	0	3442	0	1583	1774	990	742
Grp Volume(v), veh/h	20	1620	24	43	1379	0	31	0	49	18	0	7
Grp Sat Flow(s),veh/h/ln	1774	1863	1583	1774	1863	0	1721	0	1583	1774	0	1732
Q Serve(g_s), s	0.3	0.0	0.0	0.6	0.0	0.0	1.0	0.0	3.6	1.1	0.0	0.5
Cycle Q Clear(g_c), s	0.3	0.0	0.0	0.6	0.0	0.0	1.0	0.0	3.6	1.1	0.0	0.5
Prop In Lane	1.00		1.00	1.00		0.00	1.00		1.00	1.00		0.43
Lane Grp Cap(c), veh/h	420	4198	1189	370	4250	0	419	0	105	175	0	104
V/C Ratio(X)	0.05	0.39	0.02	0.12	0.32	0.00	0.07	0.00	0.47	0.10	0.00	0.07
Avail Cap(c_a), veh/h	502	4198	1189	436	4250	0	560	0	463	303	0	549
HCM Platoon Ratio	2.00	2.00	2.00	2.00	2.00	2.00	1.00	1.00	1.00	1.00	1.00	1.00
Upstream Filter(I)	0.84	0.84	0.84	1.00	1.00	0.00	1.00	0.00	1.00	1.00	0.00	1.00
Uniform Delay (d), s/veh	2.6	0.0	0.0	2.2	0.0	0.0	48.0	0.0	54.6	49.5	0.0	53.5
Incr Delay (d2), s/veh	0.0	0.2	0.0	0.1	0.2	0.0	0.1	0.0	3.2	0.3	0.0	0.3
Initial Q Delay(d3),s/veh	0.0	0.0	0.0	0.0	0.0	0.0	0.0	0.0	0.0	0.0	0.0	0.0
%ile Back of Q (50%), veh/ln	0.1	0.1	0.0	0.2	0.1	0.0	0.4	0.0	1.6	0.5	0.0	0.2
Lane Grp Delay (d), s/veh	2.6	0.2	0.0	2.3	0.2	0.0	48.1	0.0	57.8	49.8	0.0	53.7
Lane Grp LOS	A	A	A	A	A		D		E	D		D
Approach Vol, veh/h		1664			1422			80			25	
Approach Delay, s/veh		0.3			0.3			54.0			50.9	
Approach LOS		A			A			D			D	

Timer												
Assigned Phs	1	6		5	2		7	4		3	8	
Phs Duration (G+Y+Rc), s	7.4	93.0		8.5	94.1		8.1	11.0		7.3	10.2	
Change Period (Y+Rc), s	5.5	5.5		5.5	5.5		5.5	5.5		5.5	5.5	
Max Green Setting (Gmax), s	7.5	87.5		7.5	87.5		7.5	32.5		10.5	35.5	
Max Q Clear Time (g_c+I1), s	2.3	2.0		2.6	2.0		3.0	5.6		3.1	2.5	
Green Ext Time (p_c), s	0.0	35.9		0.0	35.9		0.0	0.2		0.0	0.2	

Intersection Summary	
HCM 2010 Ctrl Delay	2.0
HCM 2010 LOS	A

Notes

Lane Group	EBL	EBT	EBR	WBL	WBT	WBR	NBL	NBT	NBR	SBL	SBT	SBR
Lane Configurations												
Volume (vph)	160	1453	48	84	1071	53	27	57	51	30	75	135
Ideal Flow (vphpl)	1900	1900	1900	1900	1900	1900	1900	1900	1900	1900	1900	1900
Storage Length (ft)	150		0	200		0	100		140	100		120
Storage Lanes	1		0	1		0	1		1	1		0
Taper Length (ft)	25			25			25			25		
Lane Util. Factor	1.00	0.91	0.91	1.00	0.91	0.91	1.00	1.00	1.00	1.00	1.00	1.00
Frt		0.993			0.993				0.850			0.850
Flt Protected	0.950			0.950			0.950			0.950		
Satd. Flow (prot)	1770	5050	0	1770	5050	0	1770	1863	1583	1770	1863	1583
Flt Permitted	0.135			0.123			0.521			0.683		
Satd. Flow (perm)	251	5050	0	229	5050	0	970	1863	1583	1272	1863	1583
Right Turn on Red			Yes			Yes			Yes			Yes
Satd. Flow (RTOR)		6			7				170			211
Link Speed (mph)		40			40			30			30	
Link Distance (ft)		907			950			997			322	
Travel Time (s)		15.5			16.2			22.7			7.3	
Peak Hour Factor	0.59	0.94	0.68	0.90	0.89	0.86	0.89	0.94	0.90	0.73	0.91	0.68
Adj. Flow (vph)	271	1546	71	93	1203	62	30	61	57	41	82	199
Shared Lane Traffic (%)												
Lane Group Flow (vph)	271	1617	0	93	1265	0	30	61	57	41	82	199
Enter Blocked Intersection	No	No	No	No	No	No	No	No	No	No	No	No
Lane Alignment	Left	Left	Right	Left	Left	Right	Left	Left	Right	Left	Left	Right
Median Width(ft)		12			12			12			12	
Link Offset(ft)		0			0			0			0	
Crosswalk Width(ft)		16			16			16			16	
Two way Left Turn Lane												
Headway Factor	1.00	1.00	1.00	1.00	1.00	1.00	1.00	1.00	1.00	1.00	1.00	1.00
Turning Speed (mph)	15		9	15		9	15		9	15		9
Number of Detectors	1	1		1	1		1	1	1	1	1	1
Detector Template												
Leading Detector (ft)	50	50		50	50		50	50	50	50	50	50
Trailing Detector (ft)	0	0		0	0		0	0	0	0	0	0
Detector 1 Position(ft)	0	0		0	0		0	0	0	0	0	0
Detector 1 Size(ft)	50	50		50	50		50	50	50	50	50	50
Detector 1 Type	Cl+Ex	Cl+Ex		Cl+Ex	Cl+Ex		Cl+Ex	Cl+Ex	Cl+Ex	Cl+Ex	Cl+Ex	Cl+Ex
Detector 1 Channel												
Detector 1 Extend (s)	0.0	0.0		0.0	0.0		0.0	0.0	0.0	0.0	0.0	0.0
Detector 1 Queue (s)	0.0	0.0		0.0	0.0		0.0	0.0	0.0	0.0	0.0	0.0
Detector 1 Delay (s)	0.0	0.0		0.0	0.0		0.0	0.0	0.0	0.0	0.0	0.0
Turn Type	pm+pt	NA		pm+pt	NA		custom	NA	Perm	pm+pt	NA	custom
Protected Phases	1	6 14		13	2 10		15	4 12		11	8 16	
Permitted Phases	6 14			2 10			4		4 12	8 16		8
Detector Phase	1	6 14		13	2 10		15	4 12	4 12	11	8 16	8
Switch Phase												
Minimum Initial (s)	4.0			4.0			4.0			4.0		4.0
Minimum Split (s)	13.0			13.0			13.0			13.0		16.0
Total Split (s)	20.0			18.0			13.0			13.0		20.0
Total Split (%)	12.5%			11.3%			8.1%			8.1%		12.5%

Lane Group	ø2	ø4	ø6	ø10	ø12	ø14	ø16
Lane Configurations							
Volume (vph)							
Ideal Flow (vphpl)							
Storage Length (ft)							
Storage Lanes							
Taper Length (ft)							
Lane Util. Factor							
Frt							
Flt Protected							
Satd. Flow (prot)							
Flt Permitted							
Satd. Flow (perm)							
Right Turn on Red							
Satd. Flow (RTOR)							
Link Speed (mph)							
Link Distance (ft)							
Travel Time (s)							
Peak Hour Factor							
Adj. Flow (vph)							
Shared Lane Traffic (%)							
Lane Group Flow (vph)							
Enter Blocked Intersection							
Lane Alignment							
Median Width(ft)							
Link Offset(ft)							
Crosswalk Width(ft)							
Two way Left Turn Lane							
Headway Factor							
Turning Speed (mph)							
Number of Detectors							
Detector Template							
Leading Detector (ft)							
Trailing Detector (ft)							
Detector 1 Position(ft)							
Detector 1 Size(ft)							
Detector 1 Type							
Detector 1 Channel							
Detector 1 Extend (s)							
Detector 1 Queue (s)							
Detector 1 Delay (s)							
Turn Type							
Protected Phases	2	4	6	10	12	14	16
Permitted Phases							
Detector Phase							
Switch Phase							
Minimum Initial (s)	4.0	4.0	4.0	4.0	4.0	4.0	4.0
Minimum Split (s)	29.5	16.0	24.5	22.0	22.0	22.0	22.0
Total Split (s)	35.0	20.0	55.0	53.0	19.0	35.0	19.0
Total Split (%)	22%	13%	34%	33%	12%	22%	12%

Lane Group	EBL	EBT	EBR	WBL	WBT	WBR	NBL	NBT	NBR	SBL	SBT	SBR
Maximum Green (s)	14.5			12.5			7.5			7.5		14.5
Yellow Time (s)	3.5			3.5			3.5			3.5		3.5
All-Red Time (s)	2.0			2.0			2.0			2.0		2.0
Lost Time Adjust (s)	-2.5			-2.5			-3.0			-2.5		-2.5
Total Lost Time (s)	3.0			3.0			2.5			3.0		3.0
Lead/Lag	Lead			Lead			Lead			Lead		
Lead-Lag Optimize?	Yes			Yes			Yes			Yes		
Vehicle Extension (s)	3.0			3.0			3.0			3.0		3.0
Recall Mode	None			None			None			None		None
Walk Time (s)												5.0
Flash Dont Walk (s)												2.0
Pedestrian Calls (#/hr)												0
Act Effct Green (s)	94.2	94.2		87.6	87.6		21.4	30.3	30.3	38.8	32.9	11.4
Actuated g/C Ratio	0.59	0.59		0.55	0.55		0.13	0.19	0.19	0.24	0.21	0.07
v/c Ratio	0.88	0.54		0.41	0.46		0.17	0.17	0.13	0.12	0.21	0.65
Control Delay	57.2	11.0		21.9	10.9		32.8	29.2	0.6	23.4	28.8	16.7
Queue Delay	0.0	0.0		0.0	0.0		0.0	0.0	0.0	0.0	0.0	0.0
Total Delay	57.2	11.0		21.9	10.9		32.8	29.2	0.6	23.4	28.8	16.7
LOS	E	B		C	B		C	C	A	C	C	B
Approach Delay		17.7			11.6			18.9			20.6	
Approach LOS		B			B			B			C	

Intersection Summary	
Area Type:	Other
Cycle Length: 160	
Actuated Cycle Length: 160	
Offset: 75 (47%), Referenced to phase 2:WBTL and 6:EBTL, Start of 1st Green	
Natural Cycle: 130	
Control Type: Actuated-Coordinated	
Maximum v/c Ratio: 0.88	
Intersection Signal Delay: 15.8	Intersection LOS: B
Intersection Capacity Utilization 52.1%	ICU Level of Service A
Analysis Period (min) 15	

Splits and Phases: 4296: Surveyor Blvd & Beltline Rd

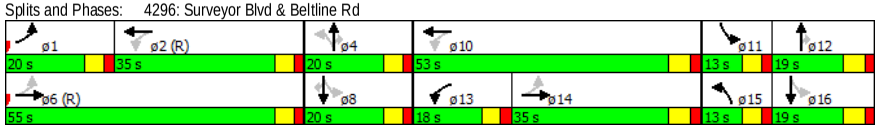

Lane Group	ø2	ø4	ø6	ø10	ø12	ø14	ø16
Maximum Green (s)	29.5	14.5	49.5	47.0	13.0	29.0	13.0
Yellow Time (s)	3.5	3.5	3.5	4.0	4.0	4.0	4.0
All-Red Time (s)	2.0	2.0	2.0	2.0	2.0	2.0	2.0
Lost Time Adjust (s)							
Total Lost Time (s)							
Lead/Lag	Lag				Lag	Lag	Lag
Lead-Lag Optimize?	Yes						
Vehicle Extension (s)	3.0	3.0	3.0	3.0	3.0	3.0	3.0
Recall Mode	C-Max	Min	C-Max	Max	Min	None	Max
Walk Time (s)	5.0	5.0	5.0	5.0	5.0	5.0	5.0
Flash Dont Walk (s)	19.0	24.0	14.0	11.0	11.0	11.0	11.0
Pedestrian Calls (#/hr)	0	0	0	0	0	0	0
Act Effct Green (s)							
Actuated g/C Ratio							
v/c Ratio							
Control Delay							
Queue Delay							
Total Delay							
LOS							
Approach Delay							
Approach LOS							

Intersection Summary

Intersection	
Intersection Delay, s/veh	0

Movement	EBT	EBR	WBL	WBT	NBL	NBR
Vol, veh/h	1698	0	0	0	0	0
Conflicting Peds, #/hr	0	0	0	0	0	0
Sign Control	Free	Free	Free	Free	Stop	Stop
RT Channelized	-	None	-	None	-	None
Storage Length	-	140	-	-	-	0
Veh in Median Storage, #	0	-	-	0	0	-
Grade, %	0	-	-	0	0	-
Peak Hour Factor	92	92	92	92	92	92
Heavy Vehicles, %	2	2	2	2	2	2
Mvmt Flow	1846	0	0	0	0	0

Major/Minor	Major1		Major2		Minor1	
Conflicting Flow All	0	0	1846	0	1846	923
Stage 1	-	-	-	-	1846	-
Stage 2	-	-	-	-	0	-
Follow-up Headway	-	-	3.12	-	3.82	3.92
Pot Capacity-1 Maneuver	-	-	150	-	113	233
Stage 1	-	-	-	-	71	-
Stage 2	-	-	-	-	-	-
Time blocked-Platoon, %	-	-		-		
Mov Capacity-1 Maneuver	-	-	150	-	113	233
Mov Capacity-2 Maneuver	-	-	-	-	113	-
Stage 1	-	-	-	-	71	-
Stage 2	-	-	-	-	-	-

Approach	EB	WB	NB
HCM Control Delay, s	0	0	0
HCM LOS			A

Minor Lane / Major Mvmt	NBLn1	EBT	EBR	WBL	WBT
Capacity (veh/h)	0	-	-	150	-
HCM Lane V/C Ratio	+	-	-	-	-
HCM Control Delay (s)	0	-	-	0	-
HCM Lane LOS	A			A	
HCM 95th %tile Q(veh)	+	-	-	0	-

Notes

~ : Volume Exceeds Capacity; $: Delay Exceeds 300 Seconds; Error : Computation Not Defined

Intersection	
Intersection Delay, s/veh	1.5

Movement	EBL	EBR	NBL	NBT	SBT	SBR
Vol, veh/h	0	32	26	1103	2590	8
Conflicting Peds, #/hr	0	0	0	0	0	0
Sign Control	Stop	Stop	Free	Free	Free	Free
RT Channelized	-	None	-	None	-	None
Storage Length	-	0	125	-	-	-
Veh in Median Storage, #	0	-	-	0	0	-
Grade, %	0	-	-	0	0	-
Peak Hour Factor	92	92	92	92	92	92
Heavy Vehicles, %	2	2	2	2	2	2
Mvmt Flow	0	35	28	1199	2815	9

Major/Minor	Minor2		Major1		Major2	
Conflicting Flow All	3416	1412	2824	0	-	0
Stage 1	2880	-	-	-	-	-
Stage 2	536	-	-	-	-	-
Follow-up Headway	3.82	3.92	3.12	-	-	-
Pot Capacity-1 Maneuver	15	109	47	-	-	-
Stage 1	15	-	-	-	-	-
Stage 2	503	-	-	-	-	-
Time blocked-Platoon, %				-	-	-
Mov Capacity-1 Maneuver	6	109	47	-	-	-
Mov Capacity-2 Maneuver	6	-	-	-	-	-
Stage 1	15	-	-	-	-	-
Stage 2	203	-	-	-	-	-

Approach	EB	NB	SB
HCM Control Delay, s	52.8	3.7	0
HCM LOS	F		

Minor Lane / Major Mvmt	NBL	NBT	EBLn1	SBU	SBT	SBR
Capacity (veh/h)	47	-	109	-	-	-
HCM Lane V/C Ratio	0.601	-	0.319	-	-	-
HCM Control Delay (s)	161.514	-	52.8	-	-	-
HCM Lane LOS	F		F			
HCM 95th %tile Q(veh)	2.289	-	1.24	-	-	-

Notes

~ : Volume Exceeds Capacity; $: Delay Exceeds 300 Seconds; Error : Computation Not Defined

Intersection	
Intersection Delay, s/veh	1.1

Movement	EBL	EBT	EBR	WBL	WBT	WBR	NBL	NBT	NBR	SBL	SBT	SBR
Vol, veh/h	0	0	1	4	0	10	7	1094	38	97	2512	0
Conflicting Peds, #/hr	0	0	0	0	0	0	0	0	0	0	0	0
Sign Control	Stop	Stop	Stop	Stop	Stop	Stop	Free	Free	Free	Free	Free	Free
RT Channelized	-	-	None	-	-	None	-	-	None	-	-	None
Storage Length	-	-	-	-	-	0	130	-	-	125	-	-
Veh in Median Storage, #	-	0	-	-	0	-	-	0	-	-	0	-
Grade, %	-	0	-	-	0	-	-	0	-	-	0	-
Peak Hour Factor	92	92	92	92	92	92	92	92	92	92	92	92
Heavy Vehicles, %	2	2	2	2	2	2	2	2	2	2	2	2
Mvmt Flow	0	0	1	4	0	11	8	1189	41	105	2730	0

Major/Minor	Minor2			Minor1			Major1			Major2		
Conflicting Flow All	3432	4187	1365	2528	4166	615	2730	0	0	1230	0	0
Stage 1	2941	2941	-	1225	1225	-	-	-	-	-	-	-
Stage 2	491	1246	-	1303	2941	-	-	-	-	-	-	-
Follow-up Headway	3.82	4.02	3.92	3.82	4.02	3.92	3.12	-	-	3.12	-	-
Pot Capacity-1 Maneuver	8	2	118	29	2	372	53	-	-	303	-	-
Stage 1	8	33	-	139	249	-	-	-	-	-	-	-
Stage 2	482	244	-	152	33	-	-	-	-	-	-	-
Time blocked-Platoon, %								-	-		-	-
Mov Capacity-1 Maneuver	5	1	118	19	1	372	53	-	-	303	-	-
Mov Capacity-2 Maneuver	5	1	-	19	1	-	-	-	-	-	-	-
Stage 1	7	22	-	118	211	-	-	-	-	-	-	-
Stage 2	397	207	-	98	22	-	-	-	-	-	-	-

Approach	EB	WB	NB	SB
HCM Control Delay, s	35.8	83.5	0.5	0.9
HCM LOS	E	F		

Minor Lane / Major Mvmt	NBL	NBT	NBR	EBLn1	WBLn1	WBLn2	SBL	SBT	SBR
Capacity (veh/h)	53	-	-	118	33	372	303	-	-
HCM Lane V/C Ratio	0.144	-	-	0.009	0.242	0.019	0.348	-	-
HCM Control Delay (s)	83.992	-	-	35.8	145.9	14.9	23.09	-	-
HCM Lane LOS	F			E	F	B	C		
HCM 95th %tile Q(veh)	0.465	-	-	0.028	0.767	0.06	1.509	-	-

Notes

~ : Volume Exceeds Capacity; $: Delay Exceeds 300 Seconds; Error : Computation Not Defined

Intersection	
Intersection Delay, s/veh	-

Movement	EBL	EBT	WBT	WBR	SBL	SBR
Vol, veh/h	0	0	0	0	0	0
Conflicting Peds, #/hr	0	0	0	0	0	0
Sign Control	Free	Free	Free	Free	Stop	Stop
RT Channelized	-	None	-	None	-	None
Storage Length	-	-	-	-	0	-
Veh in Median Storage, #	-	0	0	-	0	-
Grade, %	-	0	0	-	0	-
Peak Hour Factor	92	92	92	92	92	92
Heavy Vehicles, %	2	2	2	2	2	2
Mvmt Flow	0	0	0	0	0	0

Major/Minor	Major1		Major2		Minor2	
Conflicting Flow All	0	0	-	0	0	0
Stage 1	-	-	-	-	0	-
Stage 2	-	-	-	-	0	-
Follow-up Headway	2.218	-	-	-	3.518	3.318
Pot Capacity-1 Maneuver	-	-	-	-	-	-
Stage 1	-	-	-	-	-	-
Stage 2	-	-	-	-	-	-
Time blocked-Platoon, %		-	-	-		
Mov Capacity-1 Maneuver	-	-	-	-	-	-
Mov Capacity-2 Maneuver	-	-	-	-	-	-
Stage 1	-	-	-	-	-	-
Stage 2	-	-	-	-	-	-

Approach	EB	WB	SB
HCM Control Delay, s	0	0	0
HCM LOS			A

Minor Lane / Major Mvmt	EBL	EBT	WBT	WBR	SBLn1
Capacity (veh/h)	-	-	-	-	+
HCM Lane V/C Ratio	-	-	-	-	+
HCM Control Delay (s)	0	-	-	-	0
HCM Lane LOS	A				A
HCM 95th %tile Q(veh)	-	-	-	-	+

Notes

~ : Volume Exceeds Capacity; $: Delay Exceeds 300 Seconds; Error : Computation Not Defined

Two Way Analysis cannot be performed on an All Way Stop Intersection.

Intersection	
Intersection Delay, s/veh	0.1

Movement	EBL	EBT	EBR	WBL	WBT	WBR	NBL	NBT	NBR	SBL	SBT	SBR
Vol, veh/h	16	1698	0	0	1143	3	0	0	0	0	0	2
Conflicting Peds, #/hr	0	0	0	0	0	0	0	0	0	0	0	0
Sign Control	Free	Free	Free	Free	Free	Free	Stop	Stop	Stop	Stop	Stop	Stop
RT Channelized	-	-	None	-	-	None	-	-	None	-	-	None
Storage Length	160	-	160	175	-	-	-	-	0	-	-	0
Veh in Median Storage, #	-	0	-	-	0	-	-	0	-	-	0	-
Grade, %	-	0	-	-	0	-	-	0	-	-	0	-
Peak Hour Factor	92	92	92	92	92	92	92	92	92	92	92	92
Heavy Vehicles, %	2	2	2	2	2	2	2	2	2	2	2	2
Mvmt Flow	17	1846	0	0	1242	3	0	0	0	0	0	2

Major/Minor	Major1			Major2			Minor1			Minor2		
Conflicting Flow All	1246	0	0	1846	0	0	2377	3126	923	2017	3124	623
Stage 1	-	-	-	-	-	-	1880	1880	-	1244	1244	-
Stage 2	-	-	-	-	-	-	497	1246	-	773	1880	-
Follow-up Headway	3.12	-	-	3.12	-	-	3.82	4.02	3.92	3.82	4.02	3.92
Pot Capacity-1 Maneuver	297	-	-	150	-	-	37	11	233	62	11	368
Stage 1	-	-	-	-	-	-	47	119	-	134	244	-
Stage 2	-	-	-	-	-	-	478	244	-	325	119	-
Time blocked-Platoon, %		-	-		-	-						
Mov Capacity-1 Maneuver	297	-	-	150	-	-	35	10	233	59	10	368
Mov Capacity-2 Maneuver	-	-	-	-	-	-	35	10	-	59	10	-
Stage 1	-	-	-	-	-	-	44	112	-	126	244	-
Stage 2	-	-	-	-	-	-	475	244	-	306	112	-

Approach	EB	WB	NB	SB
HCM Control Delay, s	0.2	0	0	14.8
HCM LOS			A	B

Minor Lane / Major Mvmt	NBLn1	EBL	EBT	EBR	WBL	WBT	WBR	SBLn1
Capacity (veh/h)	0	297	-	-	150	-	-	368
HCM Lane V/C Ratio	+	0.059	-	-	-	-	-	0.006
HCM Control Delay (s)	0	17.874	-	-	0	-	-	14.8
HCM Lane LOS	A	C			A			B
HCM 95th %tile Q(veh)	+	0.186	-	-	0	-	-	0.018

Notes

~ : Volume Exceeds Capacity; $: Delay Exceeds 300 Seconds; Error : Computation Not Defined

Intersection	
Intersection Delay, s/veh	8.3
Intersection LOS	A

Movement	EBL	EBT	EBR	WBL	WBT	WBR	NBL	NBT	NBR	SBL	SBT	SBR
Vol, veh/h	10	16	1	24	4	45	0	79	53	91	88	3
Peak Hour Factor	0.92	0.92	0.92	0.92	0.92	0.92	0.92	0.92	0.92	0.92	0.92	0.92
Heavy Vehicles, %	2	2	2	2	2	2	2	2	2	2	2	2
Mvmt Flow	11	17	1	26	4	49	0	86	58	99	96	3
Number of Lanes	0	1	0	0	1	0	0	1	0	0	1	0

Approach	EB	WB	NB	SB
Opposing Approach	WB	EB	SB	NB
Opposing Lanes	1	1	1	1
Conflicting Approach Left	SB	NB	EB	WB
Conflicting Lanes Left	1	1	1	1
Conflicting Approach Right	NB	SB	WB	EB
Conflicting Lanes Right	1	1	1	1
HCM Control Delay	8	7.9	8	8.8
HCM LOS	A	A	A	A

Lane	NBLn1	EBLn1	WBLn1	SBLn1
Vol Left, %	0%	37%	33%	50%
Vol Thru, %	60%	59%	5%	48%
Vol Right, %	40%	4%	62%	2%
Sign Control	Stop	Stop	Stop	Stop
Traffic Vol by Lane	132	27	73	182
LT Vol	79	16	4	88
Through Vol	53	1	45	3
RT Vol	0	10	24	91
Lane Flow Rate	143	29	79	198
Geometry Grp	1	1	1	1
Degree of Util (X)	0.166	0.039	0.097	0.238
Departure Headway (Hd)	4.159	4.839	4.423	4.437
Convergence, Y/N	Yes	Yes	Yes	Yes
Cap	865	742	813	815
Service Time	2.169	2.853	2.433	2.437
HCM Lane V/C Ratio	0.165	0.039	0.097	0.243
HCM Control Delay	8	8	7.9	8.8
HCM Lane LOS	A	A	A	A
HCM 95th-tile Q	0.6	0.1	0.3	0.9

Notes

~ : Volume Exceeds Capacity; $: Delay Exceeds 300 Seconds; Error : Computation Not Defined

HCM 2010 Signalized Intersection Summary
4278: Midway Rd & Lindbergh Dr

7/20/2015

Movement	EBL	EBT	EBR	WBL	WBT	WBR	NBL	NBT	NBR	SBL	SBT	SBR
Lane Configurations												
Volume (veh/h)	65	35	48	60	19	207	31	2171	92	241	2004	39
Number	3	8	18	7	4	14	1	6	16	5	2	12
Initial Q (Qb), veh	0	0	0	0	0	0	0	0	0	0	0	0
Ped-Bike Adj(A_pbT)	1.00		1.00	1.00		1.00	1.00		1.00	1.00		1.00
Parking Bus Adj	1.00	1.00	1.00	1.00	1.00	1.00	1.00	1.00	1.00	1.00	1.00	1.00
Adj Sat Flow veh/h/ln	186.3	186.3	190.0	186.3	193.7	186.3	186.3	186.3	190.0	186.3	186.3	190.0
Lanes	1	1	0	1	1	1	1	3	0	1	3	0
Cap, veh/h	363	125	190	324	359	293	153	2845	129	359	3439	67
Arrive On Green	0.07	0.19	0.18	0.07	0.19	0.19	0.08	1.00	1.00	0.13	0.63	0.62
Sat Flow, veh/h	1774	668	1016	1774	1937	1583	1774	5306	240	1774	5463	106
Grp Volume(v), veh/h	96	0	121	92	25	252	48	1583	781	317	1705	849
Grp Sat Flow(s),veh/h/ln	1774	0	1684	1774	1937	1583	1774	1863	1820	1774	1863	1844
Q Serve(g_s), s	6.7	0.0	9.9	6.4	1.7	24.2	1.8	0.0	0.0	16.0	49.0	49.5
Cycle Q Clear(g_c), s	6.7	0.0	9.9	6.4	1.7	24.2	1.8	0.0	0.0	16.0	49.0	49.5
Prop In Lane	1.00		0.60	1.00		1.00	1.00		0.13	1.00		0.06
Lane Grp Cap(c), veh/h	363	0	314	324	359	293	153	1998	976	359	2345	1161
V/C Ratio(X)	0.26	0.00	0.39	0.28	0.07	0.86	0.31	0.79	0.80	0.88	0.73	0.73
Avail Cap(c_a), veh/h	373	0	314	361	383	313	209	1998	976	364	2345	1161
HCM Platoon Ratio	1.00	1.00	1.00	1.00	1.00	1.00	2.00	2.00	2.00	1.00	1.00	1.00
Upstream Filter(I)	1.00	0.00	1.00	1.00	1.00	1.00	1.00	1.00	1.00	1.00	1.00	1.00
Uniform Delay (d), s/veh	45.7	0.0	56.2	46.3	52.7	61.8	19.9	0.0	0.0	38.1	19.8	20.0
Incr Delay (d2), s/veh	0.4	0.0	0.8	0.5	0.1	19.9	1.2	3.3	6.8	21.3	2.0	4.1
Initial Q Delay(d3),s/veh	0.0	0.0	0.0	0.0	0.0	0.0	0.0	0.0	0.0	0.0	0.0	0.0
%ile Back of Q (50%), veh/ln	3.1	0.0	4.5	3.0	0.9	11.6	0.8	0.9	1.9	15.1	22.4	23.0
Lane Grp Delay (d), s/veh	46.1	0.0	57.0	46.8	52.8	81.7	21.1	3.3	6.8	59.4	21.8	24.0
Lane Grp LOS	D		E	D	D	F	C	A	A	E	C	C
Approach Vol, veh/h		217			369			2412			2871	
Approach Delay, s/veh		52.2			71.0			4.8			26.6	
Approach LOS		D			E			A			C	

Timer												
Assigned Phs	3	8		7	4		1	6		5	2	
Phs Duration (G+Y+Rc), s	14.0	32.2		13.8	32.0		9.0	87.0		23.6	101.6	
Change Period (Y+Rc), s	5.5	5.5		5.5	5.5		5.5	5.5		5.5	5.5	
Max Green Setting (Gmax), s	9.5	26.5		11.5	28.5		8.5	81.5		18.5	91.5	
Max Q Clear Time (g_c+I1), s	8.7	11.9		8.4	26.2		3.8	2.0		18.0	51.5	
Green Ext Time (p_c), s	0.0	1.5		0.1	0.3		0.0	69.4		0.1	37.2	

Intersection Summary												
HCM 2010 Ctrl Delay			21.4									
HCM 2010 LOS			C									

Notes

HCM 2010 Signalized Intersection Summary
4287: Beltway Dr & Beltline Rd

7/20/2015

Movement	EBU	EBT	EBR	WBL	WBT	NBL	NBR
Lane Configurations							
Volume (veh/h)	18	1902	30	95	1990	30	221
Number		6	16	5	2	7	14
Initial Q (Qb), veh		0	0	0	0	0	0
Ped-Bike Adj(A_pbT)			1.00	1.00		1.00	1.00
Parking Bus Adj		1.00	1.00	1.00	1.00	1.00	1.00
Adj Sat Flow veh/h/ln		186.3	190.0	186.3	186.3	186.3	186.3
Lanes		3	0	1	3	1	2
Cap, veh/h		4110	82	177	4670	214	383
Arrive On Green		0.75	0.74	0.06	0.84	0.12	0.12
Sat Flow, veh/h		5461	108	1774	5588	1774	3167
Grp Volume(v), veh/h		1337	663	122	2052	48	260
Grp Sat Flow(s),veh/h/ln		1863	1844	1774	1863	1774	1583
Q Serve(g_s), s		19.1	19.2	3.9	13.2	3.4	10.9
Cycle Q Clear(g_c), s		19.1	19.2	3.9	13.2	3.4	10.9
Prop In Lane			0.06	1.00		1.00	1.00
Lane Grp Cap(c), veh/h		2804	1388	177	4670	214	383
V/C Ratio(X)		0.48	0.48	0.69	0.44	0.22	0.68
Avail Cap(c_a), veh/h		2804	1388	261	4670	411	733
HCM Platoon Ratio		1.00	1.00	1.00	1.00	1.00	1.00
Upstream Filter(I)		1.00	1.00	1.00	1.00	1.00	1.00
Uniform Delay (d), s/veh		6.6	6.6	52.9	2.9	54.9	58.2
Incr Delay (d2), s/veh		0.6	1.2	4.7	0.3	0.5	2.1
Initial Q Delay(d3),s/veh		0.0	0.0	0.0	0.0	0.0	0.0
%ile Back of Q (50%), veh/ln		7.7	7.8	4.6	4.3	1.6	0.1
Lane Grp Delay (d), s/veh		7.2	7.8	57.6	3.2	55.4	60.3
Lane Grp LOS		A	A	E	A	E	E
Approach Vol, veh/h		2000			2174	308	
Approach Delay, s/veh		7.4			6.3	59.5	
Approach LOS		A			A	E	

Timer							
Assigned Phs		6		5	2		
Phs Duration (G+Y+Rc), s		107.0		11.5	118.5		
Change Period (Y+Rc), s		5.5		5.5	5.5		
Max Green Setting (Gmax), s		101.5		12.5	106.5		
Max Q Clear Time (g_c+I1), s		21.2		5.9	15.2		
Green Ext Time (p_c), s		57.6		0.2	62.9		

Intersection Summary							
HCM 2010 Ctrl Delay			10.4				
HCM 2010 LOS			B				

Notes

HCM 2010 Signalized Intersection Summary
4288: Midway Rd & Beltline Rd

7/20/2015

Movement	EBL	EBT	EBR	WBL	WBT	WBR	NBL	NBT	NBR	SBL	SBT	SBR
Lane Configurations												
Volume (veh/h)	185	1291	300	348	1129	435	273	1674	372	401	1236	162
Number	1	6	16	5	2	12	7	4	14	3	8	18
Initial Q (Qb), veh	0	0	0	0	0	0	0	0	0	0	0	0
Ped-Bike Adj(A_pbT)	1.00		1.00	1.00		1.00	1.00		1.00	1.00		1.00
Parking Bus Adj	1.00	1.00	1.00	1.00	1.00	1.00	1.00	1.00	1.00	1.00	1.00	1.00
Adj Sat Flow veh/h/ln	186.3	186.3	186.3	186.3	186.3	190.0	186.3	186.3	186.3	186.3	186.3	186.3
Lanes	2	3	1	2	3	0	2	3	1	2	3	1
Cap, veh/h	409	1921	544	409	1310	520	581	1921	544	409	1642	465
Arrive On Green	0.16	0.46	0.46	0.12	0.34	0.33	0.22	0.46	0.00	0.24	0.59	0.00
Sat Flow, veh/h	3442	5588	1583	3442	3810	1512	3442	5588	1583	3442	5588	1583
Grp Volume(v), veh/h	314	1359	380	355	1200	516	314	1840	0	427	1454	0
Grp Sat Flow(s),veh/h/ln	1721	1863	1583	1721	1863	1596	1721	1863	1583	1721	1863	1583
Q Serve(g_s), s	14.0	31.2	30.6	16.2	49.9	50.3	12.9	50.9	0.0	19.0	35.8	0.0
Cycle Q Clear(g_c), s	14.0	31.2	30.6	16.2	49.9	50.3	12.9	50.9	0.0	19.0	35.8	0.0
Prop In Lane	1.00		1.00	1.00		0.95	1.00		1.00	1.00		1.00
Lane Grp Cap(c), veh/h	409	1921	544	409	1281	549	581	1921	544	409	1642	465
V/C Ratio(X)	0.77	0.71	0.70	0.87	0.94	0.94	0.54	0.96	0.00	1.04	0.89	0.00
Avail Cap(c_a), veh/h	409	1921	544	409	1281	549	581	1921	544	409	1642	465
HCM Platoon Ratio	1.33	1.33	1.33	1.00	1.00	1.00	1.33	1.33	1.33	2.00	2.00	2.00
Upstream Filter(I)	1.00	1.00	1.00	1.00	1.00	1.00	1.00	1.00	0.00	1.00	1.00	0.00
Uniform Delay (d), s/veh	65.3	37.0	36.8	69.3	50.8	51.9	56.6	42.3	0.0	61.0	30.7	0.0
Incr Delay (d2), s/veh	13.0	2.2	7.3	21.4	14.0	26.3	3.6	12.7	0.0	56.7	7.4	0.0
Initial Q Delay(d3),s/veh	0.0	0.0	0.0	0.0	0.0	0.0	0.0	0.0	0.0	0.0	0.0	0.0
%ile Back of Q (50%), veh/ln	6.8	14.2	12.7	8.5	26.0	24.5	5.8	24.8	0.0	10.9	14.6	0.0
Lane Grp Delay (d), s/veh	78.2	39.2	44.1	90.7	64.8	78.2	60.2	55.0	0.0	117.7	38.1	0.0
Lane Grp LOS	E	D	D	F	E	E	E	E		F	D	
Approach Vol, veh/h		2053			2071			2154			1881	
Approach Delay, s/veh		46.1			72.6			55.8			56.2	
Approach LOS		D			E			E			E	

Timer												
Assigned Phs	1	6		5	2		7	4		3	8	
Phs Duration (G+Y+Rc), s	22.0	58.0		22.0	58.0		30.0	58.0		22.0	50.0	
Change Period (Y+Rc), s	6.0	6.0		6.0	6.0		6.0	6.0		6.0	6.0	
Max Green Setting (Gmax), s	16.0	52.0		16.0	52.0		24.0	52.0		16.0	44.0	
Max Q Clear Time (g_c+I1), s	16.0	33.2		18.2	52.3		14.9	52.9		21.0	37.8	
Green Ext Time (p_c), s	0.0	10.2		0.0	0.0		0.9	0.0		0.0	4.4	

Intersection Summary	
HCM 2010 Ctrl Delay	57.7
HCM 2010 LOS	E

Notes

HCM 2010 Signalized Intersection Summary
4289: Midway Rd & Beltway Dr

7/20/2015

Movement	EBL	EBT	EBR	WBL	WBT	WBR	NBL	NBT	NBR	SBL	SBT	SBR
Lane Configurations												
Volume (veh/h)	36	38	83	69	53	66	107	2283	105	56	1821	68
Number	3	8	18	7	4	14	1	6	16	5	2	12
Initial Q (Qb), veh	0	0	0	0	0	0	0	0	0	0	0	0
Ped-Bike Adj(A_pbT)	1.00		1.00	1.00		1.00	1.00		1.00	1.00		1.00
Parking Bus Adj	1.00	1.00	1.00	1.00	1.00	1.00	1.00	1.00	1.00	1.00	1.00	1.00
Adj Sat Flow veh/h/ln	186.3	193.7	186.3	186.3	193.7	190.0	186.3	186.3	186.3	186.3	193.7	186.3
Lanes	1	1	1	1	1	0	1	3	1	1	3	1
Cap, veh/h	224	229	187	317	107	138	264	3655	1036	188	3765	1026
Arrive On Green	0.06	0.12	0.12	0.08	0.14	0.13	0.04	0.44	0.44	0.10	1.00	1.00
Sat Flow, veh/h	1774	1937	1583	1774	767	995	1774	5588	1583	1774	5812	1583
Grp Volume(v), veh/h	64	55	104	105	0	170	109	2354	138	72	2168	84
Grp Sat Flow(s),veh/h/ln	1774	1937	1583	1774	0	1762	1774	1863	1583	1774	1937	1583
Q Serve(g_s), s	3.8	3.2	7.8	6.0	0.0	11.6	2.4	41.3	6.5	1.6	0.0	0.0
Cycle Q Clear(g_c), s	3.8	3.2	7.8	6.0	0.0	11.6	2.4	41.3	6.5	1.6	0.0	0.0
Prop In Lane	1.00		1.00	1.00		0.56	1.00		1.00	1.00		1.00
Lane Grp Cap(c), veh/h	224	229	187	317	0	245	264	3655	1036	188	3765	1026
V/C Ratio(X)	0.29	0.24	0.56	0.33	0.00	0.69	0.41	0.64	0.13	0.38	0.58	0.08
Avail Cap(c_a), veh/h	298	649	530	354	0	590	392	3655	1036	256	3765	1026
HCM Platoon Ratio	1.00	1.00	1.00	1.00	1.00	1.00	0.67	0.67	0.67	2.00	2.00	2.00
Upstream Filter(I)	1.00	1.00	1.00	1.00	0.00	1.00	1.00	1.00	1.00	1.00	1.00	1.00
Uniform Delay (d), s/veh	44.1	50.2	52.2	39.3	0.0	51.8	5.7	23.8	14.0	18.5	0.0	0.0
Incr Delay (d2), s/veh	0.7	0.5	2.6	0.6	0.0	3.5	1.0	0.9	0.3	1.3	0.6	0.2
Initial Q Delay(d3),s/veh	0.0	0.0	0.0	0.0	0.0	0.0	0.0	0.0	0.0	0.0	0.0	0.0
%ile Back of Q (50%), veh/ln	1.8	1.7	3.3	2.8	0.0	5.5	0.9	20.1	2.6	1.3	0.2	0.0
Lane Grp Delay (d), s/veh	44.8	50.7	54.8	39.9	0.0	55.4	6.8	24.7	14.3	19.8	0.6	0.2
Lane Grp LOS	D	D	D	D		E	A	C	B	B	A	A
Approach Vol, veh/h		223			275			2601			2324	
Approach Delay, s/veh		50.9			49.4			23.4			1.2	
Approach LOS		D			D			C			A	

Timer												
Assigned Phs	3	8		7	4		1	6		5	2	
Phs Duration (G+Y+Rc), s	10.8	17.8		13.4	20.4		10.0	85.0		9.2	84.2	
Change Period (Y+Rc), s	5.5	5.5		5.5	5.5		5.5	5.5		5.5	5.5	
Max Green Setting (Gmax), s	10.5	39.5		10.5	39.5		13.5	79.5		8.5	74.5	
Max Q Clear Time (g_c+I1), s	5.8	9.8		8.0	13.6		4.4	43.3		3.6	2.0	
Green Ext Time (p_c), s	0.1	1.4		0.1	1.4		0.2	33.8		0.1	63.7	

Intersection Summary	
HCM 2010 Ctrl Delay	16.3
HCM 2010 LOS	B

Notes

HCM 2010 Signalized Intersection Summary
4290: Midway Rd & Proton Dr

7/20/2015

Movement	EBL	EBT	EBR	WBL	WBT	WBR	NBL	NBT	NBR	SBL	SBT	SBR
Lane Configurations												
Volume (veh/h)	97	5	82	7	25	105	130	2148	9	47	1850	73
Number	3	8	18	7	4	14	1	6	16	5	2	12
Initial Q (Qb), veh	0	0	0	0	0	0	0	0	0	0	0	0
Ped-Bike Adj(A_pbT)	1.00		1.00	1.00		1.00	1.00		1.00	1.00		1.00
Parking Bus Adj	1.00	1.00	1.00	1.00	1.00	1.00	1.00	1.00	1.00	1.00	1.00	1.00
Adj Sat Flow veh/h/ln	186.3	193.7	190.0	190.0	186.3	186.3	186.3	186.3	190.0	186.3	186.3	190.0
Lanes	1	1	0	0	1	1	1	3	0	1	3	0
Cap, veh/h	320	42	329	52	172	173	227	3708	21	189	3501	143
Arrive On Green	0.09	0.22	0.22	0.11	0.11	0.11	0.06	0.67	0.66	0.06	0.87	0.86
Sat Flow, veh/h	1774	191	1484	194	1579	1583	1774	5550	32	1774	5332	218
Grp Volume(v), veh/h	123	0	114	46	0	114	134	1619	808	63	1611	796
Grp Sat Flow(s),veh/h/ln	1774	0	1675	1773	0	1583	1774	1863	1857	1774	1863	1824
Q Serve(g_s), s	8.1	0.0	7.8	0.0	0.0	9.5	3.1	35.1	35.2	1.5	17.8	18.3
Cycle Q Clear(g_c), s	8.1	0.0	7.8	3.1	0.0	9.5	3.1	35.1	35.2	1.5	17.8	18.3
Prop In Lane	1.00		0.89	0.20		1.00	1.00		0.02	1.00		0.12
Lane Grp Cap(c), veh/h	320	0	372	225	0	173	227	2489	1241	189	2446	1198
V/C Ratio(X)	0.38	0.00	0.31	0.20	0.00	0.66	0.59	0.65	0.65	0.33	0.66	0.66
Avail Cap(c_a), veh/h	352	0	584	410	0	345	321	2489	1241	252	2446	1198
HCM Platoon Ratio	1.00	1.00	1.00	1.00	1.00	1.00	1.00	1.00	1.00	1.33	1.33	1.33
Upstream Filter(I)	1.00	0.00	1.00	1.00	0.00	1.00	1.00	1.00	1.00	1.00	1.00	1.00
Uniform Delay (d), s/veh	45.7	0.0	44.7	56.0	0.0	58.9	16.4	13.4	13.4	13.5	4.1	4.2
Incr Delay (d2), s/veh	0.8	0.0	0.5	0.4	0.0	4.3	2.4	1.3	2.7	1.0	1.4	2.9
Initial Q Delay(d3),s/veh	0.0	0.0	0.0	0.0	0.0	0.0	0.0	0.0	0.0	0.0	0.0	0.0
%ile Back of Q (50%), veh/ln	3.8	0.0	3.5	1.5	0.0	4.1	4.8	15.1	15.5	0.8	4.3	4.8
Lane Grp Delay (d), s/veh	46.5	0.0	45.2	56.5	0.0	63.2	18.9	14.7	16.1	14.5	5.5	7.1
Lane Grp LOS	D		D	E		E	B	B	B	B	A	A
Approach Vol, veh/h		237			160			2561			2470	
Approach Delay, s/veh		45.9			61.2			15.4			6.3	
Approach LOS		D			E			B			A	

Timer												
Assigned Phs	3	8			4		1	6		5	2	
Phs Duration (G+Y+Rc), s	15.5	33.6			18.0		10.7	95.0		9.1	93.4	
Change Period (Y+Rc), s	5.5	5.5			5.5		5.5	5.5		5.5	5.5	
Max Green Setting (Gmax), s	12.5	45.5			27.5		12.5	89.5		8.5	85.5	
Max Q Clear Time (g_c+I1), s	10.1	9.8			11.5		5.1	37.2		3.5	20.3	
Green Ext Time (p_c), s	0.1	1.2			1.0		0.2	47.1		0.1	57.2	

Intersection Summary	
HCM 2010 Ctrl Delay	13.9
HCM 2010 LOS	B

Notes

HCM 2010 Signalized Intersection Summary
4295: Runyon Rd & Beltline Rd

7/20/2015

Movement	EBL	EBT	EBR	WBL	WBT	WBR	NBL	NBT	NBR	SBL	SBT	SBR
Lane Configurations												
Volume (veh/h)	18	1852	32	47	1492	12	84	1	46	20	1	25
Number	1	6	16	5	2	12	7	4	14	3	8	18
Initial Q (Qb), veh	0	0	0	0	0	0	0	0	0	0	0	0
Ped-Bike Adj(A_pbT)	1.00		1.00	1.00		1.00	1.00		1.00	1.00		1.00
Parking Bus Adj	1.00	1.00	1.00	1.00	1.00	1.00	1.00	1.00	1.00	1.00	1.00	1.00
Adj Sat Flow veh/h/ln	186.3	186.3	186.3	186.3	186.3	190.0	186.3	186.3	190.0	186.3	186.3	190.0
Lanes	1	3	1	1	3	0	2	1	0	1	1	0
Cap, veh/h	332	3966	1124	296	3954	39	491	6	155	186	13	115
Arrive On Green	0.09	1.00	1.00	0.10	1.00	1.00	0.07	0.10	0.09	0.04	0.08	0.07
Sat Flow, veh/h	1774	5588	1583	1774	5524	55	3442	62	1530	1774	165	1443
Grp Volume(v), veh/h	41	1949	58	89	1157	575	125	0	102	36	0	39
Grp Sat Flow(s),veh/h/ln	1774	1863	1583	1774	1863	1853	1721	0	1593	1774	0	1608
Q Serve(g_s), s	0.7	0.0	0.0	1.6	0.0	0.0	3.9	0.0	7.8	2.3	0.0	2.9
Cycle Q Clear(g_c), s	0.7	0.0	0.0	1.6	0.0	0.0	3.9	0.0	7.8	2.3	0.0	2.9
Prop In Lane	1.00		1.00	1.00		0.03	1.00		0.96	1.00		0.90
Lane Grp Cap(c), veh/h	332	3966	1124	296	2667	1327	491	0	162	186	0	128
V/C Ratio(X)	0.12	0.49	0.05	0.30	0.43	0.43	0.25	0.00	0.63	0.19	0.00	0.31
Avail Cap(c_a), veh/h	394	3966	1124	348	2667	1327	534	0	452	276	0	482
HCM Platoon Ratio	2.00	2.00	2.00	2.00	2.00	2.00	1.00	1.00	1.00	1.00	1.00	1.00
Upstream Filter(I)	0.80	0.80	0.80	1.00	1.00	1.00	1.00	0.00	1.00	1.00	0.00	1.00
Uniform Delay (d), s/veh	3.8	0.0	0.0	3.5	0.0	0.0	44.3	0.0	55.4	49.8	0.0	55.7
Incr Delay (d2), s/veh	0.1	0.4	0.1	0.6	0.5	1.0	0.3	0.0	4.0	0.5	0.0	1.3
Initial Q Delay(d3),s/veh	0.0	0.0	0.0	0.0	0.0	0.0	0.0	0.0	0.0	0.0	0.0	0.0
%ile Back of Q (50%), veh/ln	0.3	0.1	0.0	0.6	0.2	0.4	1.8	0.0	3.5	1.1	0.0	1.3
Lane Grp Delay (d), s/veh	3.9	0.4	0.1	4.0	0.5	1.0	44.5	0.0	59.4	50.3	0.0	57.0
Lane Grp LOS	A	A	A	A	A	A	D		E	D		E
Approach Vol, veh/h		2048			1821			227			75	
Approach Delay, s/veh		0.4			0.9			51.2			53.8	
Approach LOS		A			A			D			D	

Timer												
Assigned Phs	1	6		5	2		7	4		3	8	
Phs Duration (G+Y+Rc), s	8.6	93.0		9.3	93.8		11.4	15.9		8.6	13.1	
Change Period (Y+Rc), s	5.5	5.5		5.5	5.5		5.5	5.5		5.5	5.5	
Max Green Setting (Gmax), s	7.5	87.5		7.5	87.5		7.5	33.5		9.5	35.5	
Max Q Clear Time (g_c+I1), s	2.7	2.0		3.6	2.0		5.9	9.8		4.3	4.9	
Green Ext Time (p_c), s	0.0	52.4		0.1	52.4		0.1	0.5		0.0	0.6	

Intersection Summary	
HCM 2010 Ctrl Delay	4.3
HCM 2010 LOS	A

Notes

Lane Group	EBL	EBT	EBR	WBL	WBT	WBR	NBL	NBT	NBR	SBL	SBT	SBR
Lane Configurations												
Volume (vph)	124	1564	57	60	1513	49	86	139	105	69	144	173
Ideal Flow (vphpl)	1900	1900	1900	1900	1900	1900	1900	1900	1900	1900	1900	1900
Storage Length (ft)	150		0	200		0	100		140	100		120
Storage Lanes	1		0	1		0	1		1	1		0
Taper Length (ft)	25			25			25			25		
Lane Util. Factor	1.00	0.91	0.91	1.00	0.91	0.91	1.00	1.00	1.00	1.00	1.00	1.00
Frt		0.993			0.995				0.850			0.850
Flt Protected	0.950			0.950			0.950			0.950		
Satd. Flow (prot)	1770	5050	0	1770	5060	0	1770	1863	1583	1770	1863	1583
Flt Permitted	0.060			0.095			0.290			0.471		
Satd. Flow (perm)	112	5050	0	177	5060	0	540	1863	1583	877	1863	1583
Right Turn on Red			Yes			Yes			Yes			Yes
Satd. Flow (RTOR)		7			5				170			254
Link Speed (mph)		40			40			30			30	
Link Distance (ft)		907			950			997			322	
Travel Time (s)		15.5			16.2			22.7			7.3	
Peak Hour Factor	0.59	0.94	0.68	0.90	0.89	0.86	0.89	0.94	0.90	0.73	0.91	0.68
Adj. Flow (vph)	210	1664	84	67	1700	57	97	148	117	95	158	254
Shared Lane Traffic (%)												
Lane Group Flow (vph)	210	1748	0	67	1757	0	97	148	117	95	158	254
Enter Blocked Intersection	No	No	No	No	No	No	No	No	No	No	No	No
Lane Alignment	Left	Left	Right	Left	Left	Right	Left	Left	Right	Left	Left	Right
Median Width(ft)		12			12			12			12	
Link Offset(ft)		0			0			0			0	
Crosswalk Width(ft)		16			16			16			16	
Two way Left Turn Lane												
Headway Factor	1.00	1.00	1.00	1.00	1.00	1.00	1.00	1.00	1.00	1.00	1.00	1.00
Turning Speed (mph)	15		9	15		9	15		9	15		9
Number of Detectors	1	1		1	1		1	1	1	1	1	1
Detector Template												
Leading Detector (ft)	50	50		50	50		50	50	50	50	50	50
Trailing Detector (ft)	0	0		0	0		0	0	0	0	0	0
Detector 1 Position(ft)	0	0		0	0		0	0	0	0	0	0
Detector 1 Size(ft)	50	50		50	50		50	50	50	50	50	50
Detector 1 Type	Cl+Ex	Cl+Ex		Cl+Ex	Cl+Ex		Cl+Ex	Cl+Ex	Cl+Ex	Cl+Ex	Cl+Ex	Cl+Ex
Detector 1 Channel												
Detector 1 Extend (s)	0.0	0.0		0.0	0.0		0.0	0.0	0.0	0.0	0.0	0.0
Detector 1 Queue (s)	0.0	0.0		0.0	0.0		0.0	0.0	0.0	0.0	0.0	0.0
Detector 1 Delay (s)	0.0	0.0		0.0	0.0		0.0	0.0	0.0	0.0	0.0	0.0
Turn Type	pm+pt	NA		pm+pt	NA		custom	NA	Perm	pm+pt	NA	custom
Protected Phases	1	6 14		13	2 10		15	4 12		11	8 16	
Permitted Phases	6 14			2 10			4		4 12	8 16		8
Detector Phase	1	6 14		13	2 10		15	4 12	4 12	11	8 16	8
Switch Phase												
Minimum Initial (s)	4.0			4.0			4.0			4.0		4.0
Minimum Split (s)	13.0			13.0			13.0			13.0		16.0
Total Split (s)	16.0			16.0			13.0			13.0		20.0
Total Split (%)	10.0%			10.0%			8.1%			8.1%		12.5%

Lane Group	ø2	ø4	ø6	ø10	ø12	ø14	ø16
Lane Configurations							
Volume (vph)							
Ideal Flow (vphpl)							
Storage Length (ft)							
Storage Lanes							
Taper Length (ft)							
Lane Util. Factor							
Frt							
Flt Protected							
Satd. Flow (prot)							
Flt Permitted							
Satd. Flow (perm)							
Right Turn on Red							
Satd. Flow (RTOR)							
Link Speed (mph)							
Link Distance (ft)							
Travel Time (s)							
Peak Hour Factor							
Adj. Flow (vph)							
Shared Lane Traffic (%)							
Lane Group Flow (vph)							
Enter Blocked Intersection							
Lane Alignment							
Median Width(ft)							
Link Offset(ft)							
Crosswalk Width(ft)							
Two way Left Turn Lane							
Headway Factor							
Turning Speed (mph)							
Number of Detectors							
Detector Template							
Leading Detector (ft)							
Trailing Detector (ft)							
Detector 1 Position(ft)							
Detector 1 Size(ft)							
Detector 1 Type							
Detector 1 Channel							
Detector 1 Extend (s)							
Detector 1 Queue (s)							
Detector 1 Delay (s)							
Turn Type							
Protected Phases	2	4	6	10	12	14	16
Permitted Phases							
Detector Phase							
Switch Phase							
Minimum Initial (s)	4.0	4.0	4.0	4.0	4.0	4.0	4.0
Minimum Split (s)	29.5	16.0	24.5	22.0	22.0	22.0	22.0
Total Split (s)	35.0	20.0	51.0	56.0	20.0	40.0	20.0
Total Split (%)	22%	13%	32%	35%	13%	25%	13%

Lane Group	EBL	EBT	EBR	WBL	WBT	WBR	NBL	NBT	NBR	SBL	SBT	SBR
Maximum Green (s)	10.5			10.5			7.5			7.5		14.5
Yellow Time (s)	3.5			3.5			3.5			3.5		3.5
All-Red Time (s)	2.0			2.0			2.0			2.0		2.0
Lost Time Adjust (s)	-2.5			-2.5			-3.0			-2.5		-2.5
Total Lost Time (s)	3.0			3.0			2.5			3.0		3.0
Lead/Lag	Lead			Lead			Lead			Lead		
Lead-Lag Optimize?	Yes			Yes			Yes			Yes		
Vehicle Extension (s)	3.0			3.0			3.0			3.0		3.0
Recall Mode	None			None			None			None		None
Walk Time (s)												5.0
Flash Dont Walk (s)												2.0
Pedestrian Calls (#/hr)												0
Act Effct Green (s)	92.1	92.1		88.7	88.7		24.1	30.4	30.4	40.3	30.4	13.3
Actuated g/C Ratio	0.58	0.58		0.55	0.55		0.15	0.19	0.19	0.25	0.19	0.08
v/c Ratio	1.06	0.60		0.35	0.63		0.60	0.42	0.27	0.35	0.45	0.70
Control Delay	122.7	12.3		18.6	12.2		56.8	32.9	2.1	26.7	33.5	18.1
Queue Delay	0.0	0.0		0.0	0.0		0.0	0.0	0.0	0.0	0.0	0.0
Total Delay	122.7	12.3		18.6	12.2		56.8	32.9	2.1	26.7	33.5	18.1
LOS	F	B		B	B		E	C	A	C	C	B
Approach Delay		24.1			12.5			29.3			24.5	
Approach LOS		C			B			C			C	

Intersection Summary	
Area Type:	Other
Cycle Length: 160	
Actuated Cycle Length: 160	
Offset: 117 (73%), Referenced to phase 2:WBTL and 6:EBTL, Start of 1st Green	
Natural Cycle: 130	
Control Type: Actuated-Coordinated	
Maximum v/c Ratio: 1.06	
Intersection Signal Delay: 20.0	Intersection LOS: B
Intersection Capacity Utilization 62.9%	ICU Level of Service B
Analysis Period (min) 15	

Splits and Phases: 4296: Surveyor Blvd & Beltline Rd

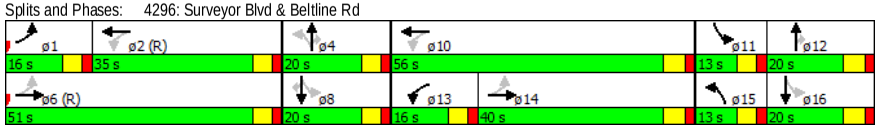

Lane Group	ø2	ø4	ø6	ø10	ø12	ø14	ø16
Maximum Green (s)	29.5	14.5	45.5	50.0	14.0	34.0	14.0
Yellow Time (s)	3.5	3.5	3.5	4.0	4.0	4.0	4.0
All-Red Time (s)	2.0	2.0	2.0	2.0	2.0	2.0	2.0
Lost Time Adjust (s)							
Total Lost Time (s)							
Lead/Lag	Lag				Lag	Lag	Lag
Lead-Lag Optimize?	Yes						
Vehicle Extension (s)	3.0	3.0	3.0	3.0	3.0	3.0	3.0
Recall Mode	C-Max	Min	C-Max	Max	Min	None	Max
Walk Time (s)	5.0	5.0	5.0	5.0	5.0	5.0	5.0
Flash Dont Walk (s)	19.0	24.0	14.0	11.0	11.0	11.0	11.0
Pedestrian Calls (#/hr)	0	0	0	0	0	0	0
Act Effct Green (s)							
Actuated g/C Ratio							
v/c Ratio							
Control Delay							
Queue Delay							
Total Delay							
LOS							
Approach Delay							
Approach LOS							

Intersection Summary

HCM 2010 TWSC
2: Northeast Drive & Beltline Rd

7/20/2015

Intersection	
Intersection Delay, s/veh	0.2

Movement	EBT	EBR	WBL	WBT	NBL	NBR
Vol, veh/h	1828	11	0	0	0	18
Conflicting Peds, #/hr	0	0	0	0	0	0
Sign Control	Free	Free	Free	Free	Stop	Stop
RT Channelized	-	None	-	None	-	None
Storage Length	-	140	-	-	-	0
Veh in Median Storage, #	0	-	-	0	0	-
Grade, %	0	-	-	0	0	-
Peak Hour Factor	92	92	92	92	92	92
Heavy Vehicles, %	2	2	2	2	2	2
Mvmt Flow	1987	12	0	0	0	20

Major/Minor	Major1		Major2		Minor1	
Conflicting Flow All	0	0	1987	0	1987	993
Stage 1	-	-	-	-	1987	-
Stage 2	-	-	-	-	0	-
Follow-up Headway	-	-	3.12	-	3.82	3.92
Pot Capacity-1 Maneuver	-	-	127	-	95	210
Stage 1	-	-	-	-	58	-
Stage 2	-	-	-	-	-	-
Time blocked-Platoon, %	-	-		-		
Mov Capacity-1 Maneuver	-	-	127	-	95	210
Mov Capacity-2 Maneuver	-	-	-	-	95	-
Stage 1	-	-	-	-	58	-
Stage 2	-	-	-	-	-	-

Approach	EB	WB	NB
HCM Control Delay, s	0	0	23.9
HCM LOS			C

Minor Lane / Major Mvmt	NBLn1	EBT	EBR	WBL	WBT
Capacity (veh/h)	210	-	-	127	-
HCM Lane V/C Ratio	0.093	-	-	-	-
HCM Control Delay (s)	23.9	-	-	0	-
HCM Lane LOS	C			A	
HCM 95th %tile Q(veh)	0.304	-	-	0	-

Notes

~ : Volume Exceeds Capacity; $: Delay Exceeds 300 Seconds; Error : Computation Not Defined

HCM 2010 TWSC
4: Midway Rd & East Drive

7/20/2015

Intersection	
Intersection Delay, s/veh	0.4

Movement	EBL	EBR	NBL	NBT	SBT	SBR
Vol, veh/h	0	16	26	2342	1982	8
Conflicting Peds, #/hr	0	0	0	0	0	0
Sign Control	Stop	Stop	Free	Free	Free	Free
RT Channelized	-	None	-	None	-	None
Storage Length	-	0	125	-	-	-
Veh in Median Storage, #	0	-	-	0	0	-
Grade, %	0	-	-	0	0	-
Peak Hour Factor	92	92	92	92	92	92
Heavy Vehicles, %	2	2	2	2	2	2
Mvmt Flow	0	17	28	2546	2154	9

Major/Minor	Minor2		Major1		Major2	
Conflicting Flow All	3266	1082	2163	0	-	0
Stage 1	2191	-	-	-	-	-
Stage 2	1075	-	-	-	-	-
Follow-up Headway	3.82	3.92	3.12	-	-	-
Pot Capacity-1 Maneuver	18	183	103	-	-	-
Stage 1	43	-	-	-	-	-
Stage 2	260	-	-	-	-	-
Time blocked-Platoon, %				-	-	-
Mov Capacity-1 Maneuver	13	183	103	-	-	-
Mov Capacity-2 Maneuver	13	-	-	-	-	-
Stage 1	43	-	-	-	-	-
Stage 2	189	-	-	-	-	-

Approach	EB	NB	SB
HCM Control Delay, s	26.7	0.6	0
HCM LOS	D		

Minor Lane / Major Mvmt	NBL	NBT	EBLn1	SBU	SBT	SBR
Capacity (veh/h)	103	-	183	-	-	-
HCM Lane V/C Ratio	0.274	-	0.095	-	-	-
HCM Control Delay (s)	52.672	-	26.7	-	-	-
HCM Lane LOS	F		D			
HCM 95th %tile Q(veh)	1.022	-	0.31	-	-	-

Notes

~ : Volume Exceeds Capacity; $: Delay Exceeds 300 Seconds; Error : Computation Not Defined

Intersection	
Intersection Delay, s/veh	84.3

Movement	EBL	EBT	EBR	WBL	WBT	WBR	NBL	NBT	NBR	SBL	SBT	SBR
Vol, veh/h	1	0	4	13	0	114	20	2655	32	33	1895	9
Conflicting Peds, #/hr	0	0	0	0	0	0	0	0	0	0	0	0
Sign Control	Stop	Stop	Stop	Stop	Stop	Stop	Free	Free	Free	Free	Free	Free
RT Channelized	-	-	None	-	-	None	-	-	None	-	-	None
Storage Length	-	-	-	-	-	0	130	-	-	125	-	-
Veh in Median Storage, #	-	0	-	-	0	-	-	0	-	-	0	-
Grade, %	-	0	-	-	0	-	-	0	-	-	0	-
Peak Hour Factor	92	92	92	92	92	92	92	92	92	92	92	92
Heavy Vehicles, %	2	2	2	2	2	2	2	2	2	2	2	2
Mvmt Flow	1	0	4	14	0	124	22	2886	35	36	2060	10

Major/Minor	Minor2			Minor1			Major1			Major2		
Conflicting Flow All	3334	5100	1035	3843	5088	1460	2070	0	0	2921	0	0
Stage 1	2136	2136	-	2947	2947	-	-	-	-	-	-	-
Stage 2	1198	2964	-	896	2141	-	-	-	-	-	-	-
Follow-up Headway	3.82	4.02	3.92	3.82	4.02	3.92	3.12	-	-	3.12	-	-
Pot Capacity-1 Maneuver	9	0	197	# 4	0	# 101	115	-	-	42	-	-
Stage 1	31	88	-	# 8	33	-	-	-	-	-	-	-
Stage 2	177	32	-	273	87	-	-	-	-	-	-	-
Time blocked-Platoon, %								-	-		-	-
Mov Capacity-1 Maneuver	-	0	197	# 1	0	# 101	115	-	-	42	-	-
Mov Capacity-2 Maneuver	-	0	-	# 1	0	-	-	-	-	-	-	-
Stage 1	25	13	-	# 6	27	-	-	-	-	-	-	-
Stage 2	-	26	-	38	12	-	-	-	-	-	-	-

Approach	EB	WB	NB	SB
HCM Control Delay, s	+	$ 3099.5	0.3	4.1
HCM LOS	-	F		

Minor Lane / Major Mvmt	NBL	NBT	NBR	EBLn1	WBLn1	WBLn2	SBL	SBT	SBR
Capacity (veh/h)	115	-	-	+	4	101	42	-	-
HCM Lane V/C Ratio	0.189	-	-	+	13.859	0.818	0.854	-	-
HCM Control Delay (s)	43.461	-	-	+	$ 7537.6	121.3	242.318	-	-
HCM Lane LOS	E			+	F	F	F		
HCM 95th %tile Q(veh)	0.662	-	-	+	8.793	4.534	3.304	-	-

Notes

~ : Volume Exceeds Capacity; $: Delay Exceeds 300 Seconds; Error : Computation Not Defined

Intersection	
Intersection Delay, s/veh	-

Movement	EBL	EBT	WBT	WBR	SBL	SBR
Vol, veh/h	0	0	0	0	0	0
Conflicting Peds, #/hr	0	0	0	0	0	0
Sign Control	Free	Free	Free	Free	Stop	Stop
RT Channelized	-	None	-	None	-	None
Storage Length	-	-	-	-	0	-
Veh in Median Storage, #	-	0	0	-	0	-
Grade, %	-	0	0	-	0	-
Peak Hour Factor	92	92	92	92	92	92
Heavy Vehicles, %	2	2	2	2	2	2
Mvmt Flow	0	0	0	0	0	0

Major/Minor	Major1		Major2		Minor2	
Conflicting Flow All	0	0	-	0	0	0
Stage 1	-	-	-	-	0	-
Stage 2	-	-	-	-	0	-
Follow-up Headway	2.218	-	-	-	3.518	3.318
Pot Capacity-1 Maneuver	-	-	-	-	-	-
Stage 1	-	-	-	-	-	-
Stage 2	-	-	-	-	-	-
Time blocked-Platoon, %		-	-	-		
Mov Capacity-1 Maneuver	-	-	-	-	-	-
Mov Capacity-2 Maneuver	-	-	-	-	-	-
Stage 1	-	-	-	-	-	-
Stage 2	-	-	-	-	-	-

Approach	EB	WB	SB
HCM Control Delay, s	0	0	0
HCM LOS			A

Minor Lane / Major Mvmt	EBL	EBT	WBT	WBR	SBLn1
Capacity (veh/h)	-	-	-	-	+
HCM Lane V/C Ratio	-	-	-	-	+
HCM Control Delay (s)	0	-	-	-	0
HCM Lane LOS	A				A
HCM 95th %tile Q(veh)	-	-	-	-	+

Notes

~ : Volume Exceeds Capacity; $: Delay Exceeds 300 Seconds; Error : Computation Not Defined

Two Way Analysis cannot be performed on an All Way Stop Intersection.

Intersection	
Intersection Delay, s/veh	1.8

Movement	EBL	EBT	EBR	WBL	WBT	WBR	NBL	NBT	NBR	SBL	SBT	SBR
Vol, veh/h	32	1791	30	63	1541	7	0	0	49	0	0	19
Conflicting Peds, #/hr	0	0	0	0	0	0	0	0	0	0	0	0
Sign Control	Free	Free	Free	Free	Free	Free	Stop	Stop	Stop	Stop	Stop	Stop
RT Channelized	-	-	None	-	-	None	-	-	None	-	-	None
Storage Length	160	-	160	175	-	-	-	-	0	-	-	0
Veh in Median Storage, #	-	0	-	-	0	-	-	0	-	-	0	-
Grade, %	-	0	-	-	0	-	-	0	-	-	0	-
Peak Hour Factor	92	92	92	92	92	92	92	92	92	92	92	92
Heavy Vehicles, %	2	2	2	2	2	2	2	2	2	2	2	2
Mvmt Flow	35	1947	33	68	1675	8	0	0	53	0	0	21

Major/Minor	Major1			Major2			Minor1			Minor2		
Conflicting Flow All	1683	0	0	1947	0	0	2823	3836	973	2664	3832	841
Stage 1	-	-	-	-	-	-	2016	2016	-	1816	1816	-
Stage 2	-	-	-	-	-	-	807	1820	-	848	2016	-
Follow-up Headway	3.12	-	-	3.12	-	-	3.82	4.02	3.92	3.82	4.02	3.92
Pot Capacity-1 Maneuver	181	-	-	133	-	-	19	4	216	24	4	264
Stage 1	-	-	-	-	-	-	37	101	-	52	128	-
Stage 2	-	-	-	-	-	-	310	127	-	292	101	-
Time blocked-Platoon, %		-	-		-	-						
Mov Capacity-1 Maneuver	181	-	-	133	-	-	9	2	216	9	2	264
Mov Capacity-2 Maneuver	-	-	-	-	-	-	9	2	-	9	2	-
Stage 1	-	-	-	-	-	-	30	81	-	42	63	-
Stage 2	-	-	-	-	-	-	140	62	-	177	81	-

Approach	EB	WB	NB	SB
HCM Control Delay, s	0.5	2.3	27	19.8
HCM LOS			D	C

Minor Lane / Major Mvmt	NBLn1	EBL	EBT	EBR	WBL	WBT	WBR	SBLn1
Capacity (veh/h)	216	181	-	-	133	-	-	264
HCM Lane V/C Ratio	0.247	0.192	-	-	0.515	-	-	0.078
HCM Control Delay (s)	27	29.561	-	-	57.769	-	-	19.8
HCM Lane LOS	D	D			F			C
HCM 95th %tile Q(veh)	0.939	0.688	-	-	2.444	-	-	0.253

Notes

~ : Volume Exceeds Capacity; $: Delay Exceeds 300 Seconds; Error : Computation Not Defined

Intersection	
Intersection Delay, s/veh	10.6
Intersection LOS	B

Movement	EBL	EBT	EBR	WBL	WBT	WBR	NBL	NBT	NBR	SBL	SBT	SBR
Vol, veh/h	9	8	3	53	16	200	2	124	85	106	124	12
Peak Hour Factor	0.92	0.92	0.92	0.92	0.92	0.92	0.92	0.92	0.92	0.92	0.92	0.92
Heavy Vehicles, %	2	2	2	2	2	2	2	2	2	2	2	2
Mvmt Flow	10	9	3	58	17	217	2	135	92	115	135	13
Number of Lanes	0	1	0	0	1	0	0	1	0	0	1	0

Approach	EB	WB	NB	SB
Opposing Approach	WB	EB	SB	NB
Opposing Lanes	1	1	1	1
Conflicting Approach Left	SB	NB	EB	WB
Conflicting Lanes Left	1	1	1	1
Conflicting Approach Right	NB	SB	WB	EB
Conflicting Lanes Right	1	1	1	1
HCM Control Delay	8.8	10.8	10	11.1
HCM LOS	A	B	A	B

Lane	NBLn1	EBLn1	WBLn1	SBLn1
Vol Left, %	1%	45%	20%	44%
Vol Thru, %	59%	40%	6%	51%
Vol Right, %	40%	15%	74%	5%
Sign Control	Stop	Stop	Stop	Stop
Traffic Vol by Lane	211	20	269	242
LT Vol	124	8	16	124
Through Vol	85	3	200	12
RT Vol	2	9	53	106
Lane Flow Rate	229	22	292	263
Geometry Grp	1	1	1	1
Degree of Util (X)	0.305	0.034	0.384	0.367
Departure Headway (Hd)	4.789	5.648	4.726	5.027
Convergence, Y/N	Yes	Yes	Yes	Yes
Cap	741	638	754	708
Service Time	2.879	3.648	2.805	3.117
HCM Lane V/C Ratio	0.309	0.034	0.387	0.371
HCM Control Delay	10	8.8	10.8	11.1
HCM Lane LOS	A	A	B	B
HCM 95th-tile Q	1.3	0.1	1.8	1.7

Notes

~ : Volume Exceeds Capacity; $: Delay Exceeds 300 Seconds; Error : Computation Not Defined

Synchro™ Output - 2035 Background Plus Site Traffic

HCM 2010 Signalized Intersection Summary
4278: Midway Rd & Lindbergh Dr

7/20/2015

Movement	EBL	EBT	EBR	WBL	WBT	WBR	NBL	NBT	NBR	SBL	SBT	SBR
Lane Configurations												
Volume (veh/h)	20	11	8	21	20	178	45	1230	55	237	2680	65
Number	3	8	18	7	4	14	1	6	16	5	2	12
Initial Q (Qb), veh	0	0	0	0	0	0	0	0	0	0	0	0
Ped-Bike Adj(A_pbT)	1.00		1.00	1.00		1.00	1.00		1.00	1.00		1.00
Parking Bus Adj	1.00	1.00	1.00	1.00	1.00	1.00	1.00	1.00	1.00	1.00	1.00	1.00
Adj Sat Flow veh/h/ln	186.3	186.3	190.0	186.3	193.7	186.3	186.3	186.3	190.0	186.3	186.3	190.0
Lanes	1	1	0	1	1	1	1	3	0	1	3	0
Cap, veh/h	296	161	129	334	328	268	137	3268	158	460	3599	86
Arrive On Green	0.04	0.17	0.16	0.04	0.17	0.17	0.09	1.00	1.00	0.09	0.66	0.65
Sat Flow, veh/h	1774	960	768	1774	1937	1583	1774	5287	256	1774	5435	130
Grp Volume(v), veh/h	29	0	27	32	27	217	69	903	440	312	2287	1144
Grp Sat Flow(s),veh/h/ln	1774	0	1727	1774	1937	1583	1774	1863	1818	1774	1863	1840
Q Serve(g_s), s	1.8	0.0	1.8	2.0	1.6	18.3	1.9	0.0	0.0	7.0	74.7	77.2
Cycle Q Clear(g_c), s	1.8	0.0	1.8	2.0	1.6	18.3	1.9	0.0	0.0	7.0	74.7	77.2
Prop In Lane	1.00		0.44	1.00		1.00	1.00		0.14	1.00		0.07
Lane Grp Cap(c), veh/h	296	0	290	334	328	268	137	2303	1123	460	2467	1218
V/C Ratio(X)	0.10	0.00	0.09	0.10	0.08	0.81	0.50	0.39	0.39	0.68	0.93	0.94
Avail Cap(c_a), veh/h	358	0	385	393	432	353	249	2303	1123	583	2467	1218
HCM Platoon Ratio	1.00	1.00	1.00	1.00	1.00	1.00	2.00	2.00	2.00	1.00	1.00	1.00
Upstream Filter(I)	1.00	0.00	1.00	1.00	1.00	1.00	1.00	1.00	1.00	1.00	1.00	1.00
Uniform Delay (d), s/veh	44.6	0.0	49.1	44.4	48.6	55.5	32.5	0.0	0.0	5.7	20.5	21.0
Incr Delay (d2), s/veh	0.1	0.0	0.1	0.1	0.1	10.1	2.9	0.5	1.0	2.2	7.6	14.8
Initial Q Delay(d3),s/veh	0.0	0.0	0.0	0.0	0.0	0.0	0.0	0.0	0.0	0.0	0.0	0.0
%ile Back of Q (50%), veh/ln	0.8	0.0	0.8	0.9	0.8	8.3	2.4	0.2	0.3	2.6	33.7	36.8
Lane Grp Delay (d), s/veh	44.7	0.0	49.3	44.5	48.7	65.6	35.4	0.5	1.0	7.9	28.1	35.8
Lane Grp LOS	D		D	D	D	E	D	A	A	A	C	D
Approach Vol, veh/h		56			276			1412			3743	
Approach Delay, s/veh		46.9			61.5			2.4			28.8	
Approach LOS		D			E			A			C	

Timer												
Assigned Phs	3	8		7	4		1	6		5	2	
Phs Duration (G+Y+Rc), s	8.2	26.4		8.4	26.5		9.2	88.9		15.3	95.0	
Change Period (Y+Rc), s	5.5	5.5		5.5	5.5		5.5	5.5		5.5	5.5	
Max Green Setting (Gmax), s	7.5	28.5		7.5	28.5		12.5	82.5		19.5	89.5	
Max Q Clear Time (g_c+I1), s	3.8	3.8		4.0	20.3		3.9	2.0		9.0	79.2	
Green Ext Time (p_c), s	0.0	1.2		0.0	0.7		0.1	71.2		0.9	10.1	

Intersection Summary												
HCM 2010 Ctrl Delay			23.8									
HCM 2010 LOS			C									

Notes

HCM 2010 Signalized Intersection Summary
4287: Beltway Dr & Beltline Rd

7/20/2015

Movement	EBU	EBT	EBR	WBL	WBT	NBL	NBR
Lane Configurations							
Volume (veh/h)	2	1975	21	118	1697	9	80
Number		6	16	5	2	7	14
Initial Q (Qb), veh		0	0	0	0	0	0
Ped-Bike Adj(A_pbT)			1.00	1.00		1.00	1.00
Parking Bus Adj		1.00	1.00	1.00	1.00	1.00	1.00
Adj Sat Flow veh/h/ln		186.3	190.0	186.3	186.3	186.3	186.3
Lanes		3	0	1	3	1	2
Cap, veh/h		4348	58	209	4969	116	206
Arrive On Green		0.79	0.78	0.08	0.89	0.07	0.07
Sat Flow, veh/h		5502	73	1774	5588	1774	3167
Grp Volume(v), veh/h		1378	685	151	1749	14	94
Grp Sat Flow(s),veh/h/ln		1863	1850	1774	1863	1774	1583
Q Serve(g_s), s		16.2	16.3	5.4	6.6	1.0	3.8
Cycle Q Clear(g_c), s		16.2	16.3	5.4	6.6	1.0	3.8
Prop In Lane			0.04	1.00		1.00	1.00
Lane Grp Cap(c), veh/h		2944	1462	209	4969	116	206
V/C Ratio(X)		0.47	0.47	0.72	0.35	0.12	0.46
Avail Cap(c_a), veh/h		2944	1462	275	4969	431	770
HCM Platoon Ratio		1.00	1.00	1.00	1.00	1.00	1.00
Upstream Filter(I)		1.00	1.00	1.00	1.00	1.00	1.00
Uniform Delay (d), s/veh		4.6	4.6	54.4	1.2	58.0	59.3
Incr Delay (d2), s/veh		0.5	1.1	6.3	0.2	0.5	1.6
Initial Q Delay(d3),s/veh		0.0	0.0	0.0	0.0	0.0	0.0
%ile Back of Q (50%), veh/ln		6.0	6.2	5.4	1.4	0.5	0.0
Lane Grp Delay (d), s/veh		5.1	5.7	60.7	1.4	58.4	60.8
Lane Grp LOS		A	A	E	A	E	E
Approach Vol, veh/h		2063			1900	108	
Approach Delay, s/veh		5.3			6.1	60.5	
Approach LOS		A			A	E	

Timer							
Assigned Phs		6		5	2		
Phs Duration (G+Y+Rc), s		107.0		13.0	120.0		
Change Period (Y+Rc), s		5.5		5.5	5.5		
Max Green Setting (Gmax), s		101.5		12.5	106.5		
Max Q Clear Time (g_c+I1), s		18.3		7.4	8.6		
Green Ext Time (p_c), s		53.3		0.2	58.6		

Intersection Summary							
HCM 2010 Ctrl Delay			7.1				
HCM 2010 LOS			A				

Notes

HCM 2010 Signalized Intersection Summary
4288: Midway Rd & Beltline Rd

7/20/2015

Movement	EBL	EBT	EBR	WBL	WBT	WBR	NBL	NBT	NBR	SBL	SBT	SBR
Lane Configurations												
Volume (veh/h)	176	1153	315	346	915	372	150	693	268	539	1927	161
Number	1	6	16	5	2	12	7	4	14	3	8	18
Initial Q (Qb), veh	0	0	0	0	0	0	0	0	0	0	0	0
Ped-Bike Adj(A_pbT)	1.00		1.00	1.00		1.00	1.00		1.00	1.00		1.00
Parking Bus Adj	1.00	1.00	1.00	1.00	1.00	1.00	1.00	1.00	1.00	1.00	1.00	1.00
Adj Sat Flow veh/h/ln	186.3	186.3	186.3	186.3	186.3	190.0	186.3	186.3	186.3	186.3	186.3	186.3
Lanes	2	3	1	2	3	0	2	3	1	2	3	1
Cap, veh/h	258	1502	426	559	1332	560	258	1886	534	538	2340	663
Arrive On Green	0.15	0.54	0.54	0.16	0.36	0.34	0.15	0.68	0.00	0.31	0.84	0.00
Sat Flow, veh/h	3442	5588	1583	3442	3740	1571	3442	5588	1583	3442	5588	1583
Grp Volume(v), veh/h	298	1214	399	353	991	422	172	762	0	573	2267	0
Grp Sat Flow(s),veh/h/ln	1721	1863	1583	1721	1863	1586	1721	1863	1583	1721	1863	1583
Q Serve(g_s), s	12.0	28.4	37.6	15.3	37.3	37.6	7.6	9.7	0.0	25.0	55.9	0.0
Cycle Q Clear(g_c), s	12.0	28.4	37.6	15.3	37.3	37.6	7.6	9.7	0.0	25.0	55.9	0.0
Prop In Lane	1.00		1.00	1.00		0.99	1.00		1.00	1.00		1.00
Lane Grp Cap(c), veh/h	258	1502	426	559	1327	565	258	1886	534	538	2340	663
V/C Ratio(X)	1.15	0.81	0.94	0.63	0.75	0.75	0.67	0.40	0.00	1.07	0.97	0.00
Avail Cap(c_a), veh/h	258	1502	426	559	1327	565	258	1886	534	538	2340	663
HCM Platoon Ratio	2.00	2.00	2.00	1.00	1.00	1.00	2.00	2.00	2.00	2.00	2.00	2.00
Upstream Filter(I)	1.00	1.00	1.00	1.00	1.00	1.00	1.00	1.00	0.00	1.00	1.00	0.00
Uniform Delay (d), s/veh	68.0	33.6	35.8	62.5	45.2	46.1	66.1	18.8	0.0	55.0	12.1	0.0
Incr Delay (d2), s/veh	104.3	4.8	30.5	5.3	3.9	8.7	12.8	0.6	0.0	57.4	12.6	0.0
Initial Q Delay(d3),s/veh	0.0	0.0	0.0	0.0	0.0	0.0	0.0	0.0	0.0	0.0	0.0	0.0
%ile Back of Q (50%), veh/ln	8.7	11.7	16.0	7.2	18.3	16.5	3.6	3.7	0.0	14.1	11.5	0.0
Lane Grp Delay (d), s/veh	172.3	38.4	66.2	67.9	49.0	54.9	78.9	19.5	0.0	112.4	24.7	0.0
Lane Grp LOS	F	D	E	E	D	D	E	B		F	C	
Approach Vol, veh/h		1911			1766			934			2840	
Approach Delay, s/veh		65.1			54.2			30.4			42.4	
Approach LOS		E			D			C			D	

Timer												
Assigned Phs	1	6		5	2		7	4		3	8	
Phs Duration (G+Y+Rc), s	15.0	46.0		29.0	60.0		15.0	57.0		28.0	70.0	
Change Period (Y+Rc), s	6.0	6.0		6.0	6.0		6.0	6.0		6.0	6.0	
Max Green Setting (Gmax), s	9.0	40.0		23.0	54.0		9.0	51.0		22.0	64.0	
Max Q Clear Time (g_c+I1), s	14.0	39.6		17.3	39.6		9.6	11.7		27.0	57.9	
Green Ext Time (p_c), s	0.0	0.3		0.8	6.0		0.0	3.8		0.0	5.4	

Intersection Summary												
HCM 2010 Ctrl Delay			49.5									
HCM 2010 LOS			D									

Notes

HCM 2010 Signalized Intersection Summary
4289: Midway Rd & Beltway Dr

7/20/2015

Movement	EBL	EBT	EBR	WBL	WBT	WBR	NBL	NBT	NBR	SBL	SBT	SBR
Lane Configurations												
Volume (veh/h)	50	42	141	37	10	54	61	1040	33	47	2466	40
Number	3	8	18	7	4	14	1	6	16	5	2	12
Initial Q (Qb), veh	0	0	0	0	0	0	0	0	0	0	0	0
Ped-Bike Adj(A_pbT)	1.00		1.00	1.00		1.00	1.00		1.00	1.00		1.00
Parking Bus Adj	1.00	1.00	1.00	1.00	1.00	1.00	1.00	1.00	1.00	1.00	1.00	1.00
Adj Sat Flow veh/h/ln	186.3	193.7	186.3	186.3	193.7	190.0	186.3	186.3	186.3	186.3	193.7	186.3
Lanes	1	1	1	1	1	0	1	3	1	1	3	1
Cap, veh/h	295	294	240	296	34	192	192	3646	1033	467	3790	1033
Arrive On Green	0.07	0.15	0.15	0.06	0.13	0.12	0.09	1.00	1.00	0.09	1.00	1.00
Sat Flow, veh/h	1774	1937	1583	1774	256	1429	1774	5588	1583	1774	5812	1583
Grp Volume(v), veh/h	89	61	176	56	0	92	62	1072	43	60	2936	49
Grp Sat Flow(s),veh/h/ln	1774	1937	1583	1774	0	1685	1774	1863	1583	1774	1937	1583
Q Serve(g_s), s	5.2	3.6	13.7	3.4	0.0	6.5	1.4	0.0	0.0	1.3	0.0	0.0
Cycle Q Clear(g_c), s	5.2	3.6	13.7	3.4	0.0	6.5	1.4	0.0	0.0	1.3	0.0	0.0
Prop In Lane	1.00		1.00	1.00		0.85	1.00		1.00	1.00		1.00
Lane Grp Cap(c), veh/h	295	294	240	296	0	226	192	3646	1033	467	3790	1033
V/C Ratio(X)	0.30	0.21	0.73	0.19	0.00	0.41	0.32	0.29	0.04	0.13	0.77	0.05
Avail Cap(c_a), veh/h	330	632	516	363	0	549	246	3646	1033	522	3790	1033
HCM Platoon Ratio	1.00	1.00	1.00	1.00	1.00	1.00	2.00	2.00	2.00	2.00	2.00	2.00
Upstream Filter(I)	1.00	1.00	1.00	1.00	0.00	1.00	1.00	1.00	1.00	1.00	1.00	1.00
Uniform Delay (d), s/veh	40.1	47.9	52.1	43.6	0.0	51.7	5.7	0.0	0.0	5.7	0.0	0.0
Incr Delay (d2), s/veh	0.6	0.3	4.3	0.3	0.0	1.2	1.0	0.2	0.1	0.1	1.6	0.1
Initial Q Delay(d3),s/veh	0.0	0.0	0.0	0.0	0.0	0.0	0.0	0.0	0.0	0.0	0.0	0.0
%ile Back of Q (50%), veh/ln	2.4	1.8	5.9	1.6	0.0	2.9	0.5	0.1	0.0	0.5	0.6	0.0
Lane Grp Delay (d), s/veh	40.7	48.2	56.4	43.9	0.0	52.8	6.7	0.2	0.1	5.9	1.6	0.1
Lane Grp LOS	D	D	E	D		D	A	A	A	A	A	A
Approach Vol, veh/h		326			148			1177			3045	
Approach Delay, s/veh		50.6			49.5			0.5			1.7	
Approach LOS		D			D			A			A	

Timer												
Assigned Phs	3	8		7	4		1	6		5	2	
Phs Duration (G+Y+Rc), s	12.5	22.5		10.2	20.3		9.1	87.0		9.0	87.0	
Change Period (Y+Rc), s	5.5	5.5		5.5	5.5		5.5	5.5		5.5	5.5	
Max Green Setting (Gmax), s	9.5	39.5		9.5	39.5		7.5	81.5		7.5	81.5	
Max Q Clear Time (g_c+I1), s	7.2	15.7		5.4	8.5		3.4	2.0		3.3	2.0	
Green Ext Time (p_c), s	0.0	1.4		0.0	1.4		0.0	63.4		0.0	63.4	

Intersection Summary												
HCM 2010 Ctrl Delay			6.3									
HCM 2010 LOS			A									

Notes

HCM 2010 Signalized Intersection Summary
4290: Midway Rd & Proton Dr

7/20/2015

Movement	EBL	EBT	EBR	WBL	WBT	WBR	NBL	NBT	NBR	SBL	SBT	SBR
Lane Configurations												
Volume (veh/h)	80	27	177	3	8	32	38	1105	12	234	2228	84
Number	3	8	18	7	4	14	1	6	16	5	2	12
Initial Q (Qb), veh	0	0	0	0	0	0	0	0	0	0	0	0
Ped-Bike Adj(A_pbT)	1.00		1.00	1.00		1.00	1.00		1.00	1.00		1.00
Parking Bus Adj	1.00	1.00	1.00	1.00	1.00	1.00	1.00	1.00	1.00	1.00	1.00	1.00
Adj Sat Flow veh/h/ln	186.3	193.7	190.0	190.0	186.3	186.3	186.3	186.3	190.0	186.3	186.3	190.0
Lanes	1	1	0	0	1	1	1	3	0	1	3	0
Cap, veh/h	257	86	266	51	124	163	183	3489	53	447	3662	141
Arrive On Green	0.08	0.21	0.21	0.10	0.10	0.10	0.04	0.64	0.62	0.18	1.00	1.00
Sat Flow, veh/h	1774	419	1291	170	1207	1583	1774	5489	84	1774	5345	206
Grp Volume(v), veh/h	101	0	290	16	0	35	39	843	418	312	1930	964
Grp Sat Flow(s),veh/h/ln	1774	0	1709	1377	0	1583	1774	1863	1848	1774	1863	1826
Q Serve(g_s), s	6.5	0.0	21.8	0.0	0.0	2.7	1.0	14.3	14.3	6.9	0.0	0.0
Cycle Q Clear(g_c), s	6.5	0.0	21.8	7.9	0.0	2.7	1.0	14.3	14.3	6.9	0.0	0.0
Prop In Lane	1.00		0.76	0.25		1.00	1.00		0.05	1.00		0.11
Lane Grp Cap(c), veh/h	257	0	353	175	0	163	183	2368	1174	447	2552	1251
V/C Ratio(X)	0.39	0.00	0.82	0.09	0.00	0.21	0.21	0.36	0.36	0.70	0.76	0.77
Avail Cap(c_a), veh/h	311	0	611	366	0	354	255	2368	1174	576	2552	1251
HCM Platoon Ratio	1.00	1.00	1.00	1.00	1.00	1.00	1.00	1.00	1.00	2.00	2.00	2.00
Upstream Filter(I)	1.00	0.00	1.00	1.00	0.00	1.00	1.00	1.00	1.00	1.00	1.00	1.00
Uniform Delay (d), s/veh	46.1	0.0	50.9	54.5	0.0	55.2	7.2	11.5	11.5	8.2	0.0	0.0
Incr Delay (d2), s/veh	1.0	0.0	4.8	0.2	0.0	0.7	0.6	0.4	0.8	2.6	2.1	4.6
Initial Q Delay(d3),s/veh	0.0	0.0	0.0	0.0	0.0	0.0	0.0	0.0	0.0	0.0	0.0	0.0
%ile Back of Q (50%), veh/ln	3.1	0.0	10.1	0.5	0.0	1.1	0.4	6.1	6.2	3.3	0.8	1.6
Lane Grp Delay (d), s/veh	47.1	0.0	55.7	54.7	0.0	55.9	7.7	11.9	12.4	10.8	2.1	4.6
Lane Grp LOS	D		E	D		E	A	B	B	B	A	A
Approach Vol, veh/h		391			51			1300			3206	
Approach Delay, s/veh		53.5			55.5			12.0			3.7	
Approach LOS		D			E			B			A	

Timer												
Assigned Phs	3	8			4		1	6		5	2	
Phs Duration (G+Y+Rc), s	13.9	30.7			16.8		8.6	88.3		15.2	95.0	
Change Period (Y+Rc), s	5.5	5.5			5.5		5.5	5.5		5.5	5.5	
Max Green Setting (Gmax), s	12.5	45.5			27.5		8.5	78.5		19.5	89.5	
Max Q Clear Time (g_c+I1), s	8.5	23.8			9.9		3.0	16.3		8.9	2.0	
Green Ext Time (p_c), s	0.1	1.4			1.4		0.0	49.2		0.9	63.5	

Intersection Summary			
HCM 2010 Ctrl Delay			10.4
HCM 2010 LOS			B

Notes

HCM 2010 Signalized Intersection Summary
4295: Runyon Rd & Beltline Rd

7/20/2015

Movement	EBL	EBT	EBR	WBL	WBT	WBR	NBL	NBT	NBR	SBL	SBT	SBR
Lane Configurations												
Volume (veh/h)	9	1544	16	33	1200	0	49	0	35	10	1	2
Number	1	6	16	5	2	12	7	4	14	3	8	18
Initial Q (Qb), veh	0	0	0	0	0	0	0	0	0	0	0	0
Ped-Bike Adj(A_pbT)	1.00		1.00	1.00		1.00	1.00		1.00	1.00		1.00
Parking Bus Adj	1.00	1.00	1.00	1.00	1.00	1.00	1.00	1.00	1.00	1.00	1.00	1.00
Adj Sat Flow veh/h/ln	186.3	186.3	186.3	186.3	186.3	190.0	186.3	186.3	190.0	186.3	186.3	190.0
Lanes	1	3	1	1	3	0	2	1	0	1	1	0
Cap, veh/h	411	4101	1162	366	4172	0	469	0	133	172	66	49
Arrive On Green	0.07	1.00	1.00	0.10	1.00	0.00	0.05	0.00	0.07	0.04	0.07	0.05
Sat Flow, veh/h	1774	5588	1583	1774	5588	0	3442	0	1583	1774	990	742
Grp Volume(v), veh/h	20	1625	29	62	1379	0	73	0	74	18	0	7
Grp Sat Flow(s),veh/h/ln	1774	1863	1583	1774	1863	0	1721	0	1583	1774	0	1732
Q Serve(g_s), s	0.3	0.0	0.0	0.9	0.0	0.0	2.3	0.0	5.5	1.1	0.0	0.5
Cycle Q Clear(g_c), s	0.3	0.0	0.0	0.9	0.0	0.0	2.3	0.0	5.5	1.1	0.0	0.5
Prop In Lane	1.00		1.00	1.00		0.00	1.00		1.00	1.00		0.43
Lane Grp Cap(c), veh/h	411	4101	1162	366	4172	0	469	0	133	172	0	115
V/C Ratio(X)	0.05	0.40	0.02	0.17	0.33	0.00	0.16	0.00	0.56	0.10	0.00	0.06
Avail Cap(c_a), veh/h	491	4101	1162	424	4172	0	569	0	452	298	0	537
HCM Platoon Ratio	2.00	2.00	2.00	2.00	2.00	2.00	1.00	1.00	1.00	1.00	1.00	1.00
Upstream Filter(I)	0.84	0.84	0.84	1.00	1.00	0.00	1.00	0.00	1.00	1.00	0.00	1.00
Uniform Delay (d), s/veh	3.1	0.0	0.0	2.4	0.0	0.0	45.8	0.0	54.7	50.0	0.0	54.0
Incr Delay (d2), s/veh	0.0	0.2	0.0	0.2	0.2	0.0	0.2	0.0	3.6	0.3	0.0	0.2
Initial Q Delay(d3),s/veh	0.0	0.0	0.0	0.0	0.0	0.0	0.0	0.0	0.0	0.0	0.0	0.0
%ile Back of Q (50%), veh/ln	0.1	0.1	0.0	0.3	0.1	0.0	1.0	0.0	2.4	0.5	0.0	0.2
Lane Grp Delay (d), s/veh	3.2	0.2	0.0	2.6	0.2	0.0	45.9	0.0	58.4	50.3	0.0	54.2
Lane Grp LOS	A	A	A	A	A		D		E	D		D
Approach Vol, veh/h		1674			1441			147			25	
Approach Delay, s/veh		0.3			0.3			52.2			51.4	
Approach LOS		A			A			D			D	

Timer												
Assigned Phs	1	6		5	2		7	4		3	8	
Phs Duration (G+Y+Rc), s	7.5	93.0		9.0	94.5		9.5	13.3		7.3	11.1	
Change Period (Y+Rc), s	5.5	5.5		5.5	5.5		5.5	5.5		5.5	5.5	
Max Green Setting (Gmax), s	7.5	87.5		7.5	87.5		7.5	32.5		10.5	35.5	
Max Q Clear Time (g_c+I1), s	2.3	2.0		2.9	2.0		4.3	7.5		3.1	2.5	
Green Ext Time (p_c), s	0.0	36.2		0.0	36.2		0.1	0.3		0.0	0.3	

Intersection Summary			
HCM 2010 Ctrl Delay			3.0
HCM 2010 LOS			A

Notes

Lane Group	EBL	EBT	EBR	WBL	WBT	WBR	NBL	NBT	NBR	SBL	SBT	SBR
Lane Configurations												
Volume (vph)	160	1459	48	89	1094	53	27	57	52	30	75	135
Ideal Flow (vphpl)	1900	1900	1900	1900	1900	1900	1900	1900	1900	1900	1900	1900
Storage Length (ft)	150		0	200		0	100		140	100		120
Storage Lanes	1		0	1		0	1		1	1		0
Taper Length (ft)	25			25			25			25		
Lane Util. Factor	1.00	0.91	0.91	1.00	0.91	0.91	1.00	1.00	1.00	1.00	1.00	1.00
Frt		0.993			0.993				0.850			0.850
Flt Protected	0.950			0.950			0.950			0.950		
Satd. Flow (prot)	1770	5050	0	1770	5050	0	1770	1863	1583	1770	1863	1583
Flt Permitted	0.129			0.121			0.521			0.683		
Satd. Flow (perm)	240	5050	0	225	5050	0	970	1863	1583	1272	1863	1583
Right Turn on Red			Yes			Yes			Yes			Yes
Satd. Flow (RTOR)		6			7				170			211
Link Speed (mph)		40			40			30			30	
Link Distance (ft)		907			950			997			322	
Travel Time (s)		15.5			16.2			22.7			7.3	
Peak Hour Factor	0.59	0.94	0.68	0.90	0.89	0.86	0.89	0.94	0.90	0.73	0.91	0.68
Adj. Flow (vph)	271	1552	71	99	1229	62	30	61	58	41	82	199
Shared Lane Traffic (%)												
Lane Group Flow (vph)	271	1623	0	99	1291	0	30	61	58	41	82	199
Enter Blocked Intersection	No	No	No	No	No	No	No	No	No	No	No	No
Lane Alignment	Left	Left	Right	Left	Left	Right	Left	Left	Right	Left	Left	Right
Median Width(ft)		12			12			12			12	
Link Offset(ft)		0			0			0			0	
Crosswalk Width(ft)		16			16			16			16	
Two way Left Turn Lane												
Headway Factor	1.00	1.00	1.00	1.00	1.00	1.00	1.00	1.00	1.00	1.00	1.00	1.00
Turning Speed (mph)	15		9	15		9	15		9	15		9
Number of Detectors	1	1		1	1		1	1	1	1	1	1
Detector Template												
Leading Detector (ft)	50	50		50	50		50	50	50	50	50	50
Trailing Detector (ft)	0	0		0	0		0	0	0	0	0	0
Detector 1 Position(ft)	0	0		0	0		0	0	0	0	0	0
Detector 1 Size(ft)	50	50		50	50		50	50	50	50	50	50
Detector 1 Type	Cl+Ex	Cl+Ex		Cl+Ex	Cl+Ex		Cl+Ex	Cl+Ex	Cl+Ex	Cl+Ex	Cl+Ex	Cl+Ex
Detector 1 Channel												
Detector 1 Extend (s)	0.0	0.0		0.0	0.0		0.0	0.0	0.0	0.0	0.0	0.0
Detector 1 Queue (s)	0.0	0.0		0.0	0.0		0.0	0.0	0.0	0.0	0.0	0.0
Detector 1 Delay (s)	0.0	0.0		0.0	0.0		0.0	0.0	0.0	0.0	0.0	0.0
Turn Type	pm+pt	NA		pm+pt	NA		custom	NA	Perm	pm+pt	NA	custom
Protected Phases	1	6 14		13	2 10		15	4 12		11	8 16	
Permitted Phases	6 14			2 10			4		4 12	8 16		8
Detector Phase	1	6 14		13	2 10		15	4 12	4 12	11	8 16	8
Switch Phase												
Minimum Initial (s)	4.0			4.0			4.0			4.0		4.0
Minimum Split (s)	13.0			13.0			13.0			13.0		16.0
Total Split (s)	20.0			18.0			13.0			13.0		20.0
Total Split (%)	12.5%			11.3%			8.1%			8.1%		12.5%

Lane Group	ø2	ø4	ø6	ø10	ø12	ø14	ø16
Lane Configurations							
Volume (vph)							
Ideal Flow (vphpl)							
Storage Length (ft)							
Storage Lanes							
Taper Length (ft)							
Lane Util. Factor							
Frt							
Flt Protected							
Satd. Flow (prot)							
Flt Permitted							
Satd. Flow (perm)							
Right Turn on Red							
Satd. Flow (RTOR)							
Link Speed (mph)							
Link Distance (ft)							
Travel Time (s)							
Peak Hour Factor							
Adj. Flow (vph)							
Shared Lane Traffic (%)							
Lane Group Flow (vph)							
Enter Blocked Intersection							
Lane Alignment							
Median Width(ft)							
Link Offset(ft)							
Crosswalk Width(ft)							
Two way Left Turn Lane							
Headway Factor							
Turning Speed (mph)							
Number of Detectors							
Detector Template							
Leading Detector (ft)							
Trailing Detector (ft)							
Detector 1 Position(ft)							
Detector 1 Size(ft)							
Detector 1 Type							
Detector 1 Channel							
Detector 1 Extend (s)							
Detector 1 Queue (s)							
Detector 1 Delay (s)							
Turn Type							
Protected Phases	2	4	6	10	12	14	16
Permitted Phases							
Detector Phase							
Switch Phase							
Minimum Initial (s)	4.0	4.0	4.0	4.0	4.0	4.0	4.0
Minimum Split (s)	29.5	16.0	24.5	22.0	22.0	22.0	22.0
Total Split (s)	35.0	20.0	55.0	53.0	19.0	35.0	19.0
Total Split (%)	22%	13%	34%	33%	12%	22%	12%

Lane Group	EBL	EBT	EBR	WBL	WBT	WBR	NBL	NBT	NBR	SBL	SBT	SBR
Maximum Green (s)	14.5			12.5			7.5			7.5		14.5
Yellow Time (s)	3.5			3.5			3.5			3.5		3.5
All-Red Time (s)	2.0			2.0			2.0			2.0		2.0
Lost Time Adjust (s)	-2.5			-2.5			-3.0			-2.5		-2.5
Total Lost Time (s)	3.0			3.0			2.5			3.0		3.0
Lead/Lag	Lead			Lead			Lead			Lead		
Lead-Lag Optimize?	Yes			Yes			Yes			Yes		
Vehicle Extension (s)	3.0			3.0			3.0			3.0		3.0
Recall Mode	None			None			None			None		None
Walk Time (s)												5.0
Flash Dont Walk (s)												2.0
Pedestrian Calls (#/hr)												0
Act Effct Green (s)	93.9	93.9		87.6	87.6		21.4	30.3	30.3	38.8	32.9	11.4
Actuated g/C Ratio	0.59	0.59		0.55	0.55		0.13	0.19	0.19	0.24	0.21	0.07
v/c Ratio	0.89	0.55		0.44	0.47		0.17	0.17	0.13	0.12	0.21	0.65
Control Delay	61.6	11.2		25.2	12.4		32.8	29.2	0.6	23.4	28.8	16.7
Queue Delay	0.0	0.0		0.0	0.0		0.0	0.0	0.0	0.0	0.0	0.0
Total Delay	61.6	11.2		25.2	12.4		32.8	29.2	0.6	23.4	28.8	16.7
LOS	E	B		C	B		C	C	A	C	C	B
Approach Delay		18.4			13.3			18.8			20.6	
Approach LOS		B			B			B			C	

Intersection Summary	
Area Type:	Other
Cycle Length: 160	
Actuated Cycle Length: 160	
Offset: 75 (47%), Referenced to phase 2:WBTL and 6:EBTL, Start of 1st Green	
Natural Cycle: 130	
Control Type: Actuated-Coordinated	
Maximum v/c Ratio: 0.89	
Intersection Signal Delay: 16.7	Intersection LOS: B
Intersection Capacity Utilization 52.5%	ICU Level of Service A
Analysis Period (min) 15	

Splits and Phases: 4296: Surveyor Blvd & Beltline Rd

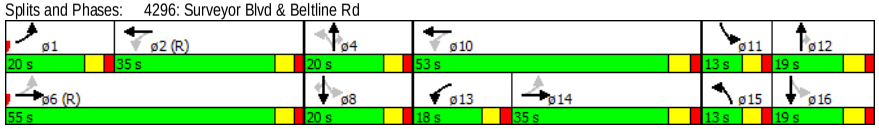

Lane Group	ø2	ø4	ø6	ø10	ø12	ø14	ø16
Maximum Green (s)	29.5	14.5	49.5	47.0	13.0	29.0	13.0
Yellow Time (s)	3.5	3.5	3.5	4.0	4.0	4.0	4.0
All-Red Time (s)	2.0	2.0	2.0	2.0	2.0	2.0	2.0
Lost Time Adjust (s)							
Total Lost Time (s)							
Lead/Lag	Lag				Lag	Lag	Lag
Lead-Lag Optimize?	Yes						
Vehicle Extension (s)	3.0	3.0	3.0	3.0	3.0	3.0	3.0
Recall Mode	C-Max	Min	C-Max	Max	Min	None	Max
Walk Time (s)	5.0	5.0	5.0	5.0	5.0	5.0	5.0
Flash Dont Walk (s)	19.0	24.0	14.0	11.0	11.0	11.0	11.0
Pedestrian Calls (#/hr)	0	0	0	0	0	0	0
Act Effct Green (s)							
Actuated g/C Ratio							
v/c Ratio							
Control Delay							
Queue Delay							
Total Delay							
LOS							
Approach Delay							
Approach LOS							

Intersection Summary

HCM 2010 TWSC
2: Northeast Drive & Beltline Rd

7/20/2015

Intersection	
Intersection Delay, s/veh	0.6

Movement	EBT	EBR	WBL	WBT	NBL	NBR
Vol, veh/h	1761	1	0	0	0	42
Conflicting Peds, #/hr	0	0	0	0	0	0
Sign Control	Free	Free	Free	Free	Stop	Stop
RT Channelized	-	None	-	None	-	None
Storage Length	-	140	-	-	-	0
Veh in Median Storage, #	0	-	-	0	0	-
Grade, %	0	-	-	0	0	-
Peak Hour Factor	92	92	92	92	92	92
Heavy Vehicles, %	2	2	2	2	2	2
Mvmt Flow	1914	1	0	0	0	46

Major/Minor	Major1		Major2		Minor1	
Conflicting Flow All	0	0	1914	0	1914	957
Stage 1	-	-	-	-	1914	-
Stage 2	-	-	-	-	0	-
Follow-up Headway	-	-	3.12	-	3.82	3.92
Pot Capacity-1 Maneuver	-	-	138	-	104	222
Stage 1	-	-	-	-	65	-
Stage 2	-	-	-	-	-	-
Time blocked-Platoon, %	-	-		-		
Mov Capacity-1 Maneuver	-	-	138	-	104	222
Mov Capacity-2 Maneuver	-	-	-	-	104	-
Stage 1	-	-	-	-	65	-
Stage 2	-	-	-	-	-	-

Approach	EB	WB	NB
HCM Control Delay, s	0	0	25.4
HCM LOS			D

Minor Lane / Major Mvmt	NBLn1	EBT	EBR	WBL	WBT
Capacity (veh/h)	222	-	-	138	-
HCM Lane V/C Ratio	0.206	-	-	-	-
HCM Control Delay (s)	25.4	-	-	0	-
HCM Lane LOS	D			A	
HCM 95th %tile Q(veh)	0.751	-	-	0	-

Notes

~ : Volume Exceeds Capacity; $: Delay Exceeds 300 Seconds; Error : Computation Not Defined

HCM 2010 TWSC
4: Midway Rd & East Drive

7/20/2015

Intersection	
Intersection Delay, s/veh	3.2

Movement	EBL	EBR	NBL	NBT	SBT	SBR
Vol, veh/h	0	65	32	1123	2608	15
Conflicting Peds, #/hr	0	0	0	0	0	0
Sign Control	Stop	Stop	Free	Free	Free	Free
RT Channelized	-	None	-	None	-	None
Storage Length	-	0	125	-	-	-
Veh in Median Storage, #	0	-	-	0	0	-
Grade, %	0	-	-	0	0	-
Peak Hour Factor	92	92	92	92	92	92
Heavy Vehicles, %	2	2	2	2	2	2
Mvmt Flow	0	71	35	1221	2835	16

Major/Minor	Minor2		Major1		Major2	
Conflicting Flow All	3462	1426	2851	0	-	0
Stage 1	2904	-	-	-	-	-
Stage 2	558	-	-	-	-	-
Follow-up Headway	3.82	3.92	3.12	-	-	-
Pot Capacity-1 Maneuver	14	107	45	-	-	-
Stage 1	14	-	-	-	-	-
Stage 2	490	-	-	-	-	-
Time blocked-Platoon, %				-	-	-
Mov Capacity-1 Maneuver	3	107	45	-	-	-
Mov Capacity-2 Maneuver	3	-	-	-	-	-
Stage 1	14	-	-	-	-	-
Stage 2	109	-	-	-	-	-

Approach	EB	NB	SB
HCM Control Delay, s	88.1	5.8	0
HCM LOS	F		

Minor Lane / Major Mvmt	NBL	NBT	EBLn1	SBU	SBT	SBR
Capacity (veh/h)	45	-	107	-	-	-
HCM Lane V/C Ratio	0.773	-	0.66	-	-	-
HCM Control Delay (s)	208.372	-	88.1	-	-	-
HCM Lane LOS	F		F			
HCM 95th %tile Q(veh)	3.029	-	3.355	-	-	-

Notes

~ : Volume Exceeds Capacity; $: Delay Exceeds 300 Seconds; Error : Computation Not Defined

Intersection	
Intersection Delay, s/veh	1.2

Movement	EBL	EBT	EBR	WBL	WBT	WBR	NBL	NBT	NBR	SBL	SBT	SBR
Vol, veh/h	0	0	1	4	0	10	7	1119	38	97	2605	0
Conflicting Peds, #/hr	0	0	0	0	0	0	0	0	0	0	0	0
Sign Control	Stop	Stop	Stop	Stop	Stop	Stop	Free	Free	Free	Free	Free	Free
RT Channelized	-	-	None	-	-	None	-	-	None	-	-	None
Storage Length	-	-	-	-	-	0	130	-	-	125	-	-
Veh in Median Storage, #	-	0	-	-	0	-	-	0	-	-	0	-
Grade, %	-	0	-	-	0	-	-	0	-	-	0	-
Peak Hour Factor	92	92	92	92	92	92	92	92	92	92	92	92
Heavy Vehicles, %	2	2	2	2	2	2	2	2	2	2	2	2
Mvmt Flow	0	0	1	4	0	11	8	1216	41	105	2832	0

Major/Minor	Minor2			Minor1			Major1			Major2		
Conflicting Flow All	3544	4315	1416	2595	4294	629	2832	0	0	1258	0	0
Stage 1	3042	3042	-	1252	1252	-	-	-	-	-	-	-
Stage 2	502	1273	-	1343	3042	-	-	-	-	-	-	-
Follow-up Headway	3.82	4.02	3.92	3.82	4.02	3.92	3.12	-	-	3.12	-	-
Pot Capacity-1 Maneuver	6	2	109	27	2	364	46	-	-	293	-	-
Stage 1	6	29	-	133	242	-	-	-	-	-	-	-
Stage 2	475	237	-	143	29	-	-	-	-	-	-	-
Time blocked-Platoon, %								-	-		-	-
Mov Capacity-1 Maneuver	4	1	109	17	1	364	46	-	-	293	-	-
Mov Capacity-2 Maneuver	4	1	-	17	1	-	-	-	-	-	-	-
Stage 1	5	19	-	110	200	-	-	-	-	-	-	-
Stage 2	381	196	-	91	19	-	-	-	-	-	-	-

Approach	EB	WB	NB	SB
HCM Control Delay, s	38.4	93	0.6	0.9
HCM LOS	E	F		

Minor Lane / Major Mvmt	NBL	NBT	NBR	EBLn1	WBLn1	WBLn2	SBL	SBT	SBR
Capacity (veh/h)	46	-	-	109	30	364	293	-	-
HCM Lane V/C Ratio	0.165	-	-	0.01	0.266	0.02	0.36	-	-
HCM Control Delay (s)	98.179	-	-	38.4	163.9	15.1	24.035	-	-
HCM Lane LOS	F			E	F	C	C		
HCM 95th %tile Q(veh)	0.535	-	-	0.03	0.833	0.061	1.58	-	-

Notes

~ : Volume Exceeds Capacity; $: Delay Exceeds 300 Seconds; Error : Computation Not Defined

Intersection	
Intersection Delay, s/veh	7.1

Movement	EBL	EBT	WBT	WBR	SBL	SBR
Vol, veh/h	2	0	0	16	61	7
Conflicting Peds, #/hr	0	0	0	0	0	0
Sign Control	Free	Free	Free	Free	Stop	Stop
RT Channelized	-	None	-	None	-	None
Storage Length	-	-	-	-	0	-
Veh in Median Storage, #	-	0	0	-	0	-
Grade, %	-	0	0	-	0	-
Peak Hour Factor	92	92	92	92	92	92
Heavy Vehicles, %	2	2	2	2	2	2
Mvmt Flow	2	0	0	17	66	8

Major/Minor	Major1		Major2		Minor2	
Conflicting Flow All	17	0	-	0	13	9
Stage 1	-	-	-	-	9	-
Stage 2	-	-	-	-	4	-
Follow-up Headway	2.218	-	-	-	3.518	3.318
Pot Capacity-1 Maneuver	1600	-	-	-	1006	1073
Stage 1	-	-	-	-	1014	-
Stage 2	-	-	-	-	1019	-
Time blocked-Platoon, %		-	-	-		
Mov Capacity-1 Maneuver	1600	-	-	-	1005	1073
Mov Capacity-2 Maneuver	-	-	-	-	1005	-
Stage 1	-	-	-	-	1014	-
Stage 2	-	-	-	-	1018	-

Approach	EB	WB	SB
HCM Control Delay, s	7.3	0	8.8
HCM LOS			A

Minor Lane / Major Mvmt	EBL	EBT	WBT	WBR	SBLn1
Capacity (veh/h)	1600	-	-	-	1012
HCM Lane V/C Ratio	0.001	-	-	-	0.073
HCM Control Delay (s)	7.253	0	-	-	8.8
HCM Lane LOS	A	A			A
HCM 95th %tile Q(veh)	0.004	-	-	-	0.236

Notes

~ : Volume Exceeds Capacity; $: Delay Exceeds 300 Seconds; Error : Computation Not Defined

Two Way Analysis cannot be performed on an All Way Stop Intersection.

Intersection	
Intersection Delay, s/veh	0.7

Movement	EBL	EBT	EBR	WBL	WBT	WBR	NBL	NBT	NBR	SBL	SBT	SBR
Vol, veh/h	16	1711	4	14	1153	3	0	0	51	0	0	2
Conflicting Peds, #/hr	0	0	0	0	0	0	0	0	0	0	0	0
Sign Control	Free	Free	Free	Free	Free	Free	Stop	Stop	Stop	Stop	Stop	Stop
RT Channelized	-	-	None	-	-	None	-	-	None	-	-	None
Storage Length	160	-	160	175	-	-	-	-	0	-	-	0
Veh in Median Storage, #	-	0	-	-	0	-	-	0	-	-	0	-
Grade, %	-	0	-	-	0	-	-	0	-	-	0	-
Peak Hour Factor	92	92	92	92	92	92	92	92	92	92	92	92
Heavy Vehicles, %	2	2	2	2	2	2	2	2	2	2	2	2
Mvmt Flow	17	1860	4	15	1253	3	0	0	55	0	0	2

Major/Minor	Major1			Major2			Minor1			Minor2		
Conflicting Flow All	1257	0	0	1860	0	0	2427	3182	930	2064	3180	628
Stage 1	-	-	-	-	-	-	1895	1895	-	1285	1285	-
Stage 2	-	-	-	-	-	-	532	1287	-	779	1895	-
Follow-up Headway	3.12	-	-	3.12	-	-	3.82	4.02	3.92	3.82	4.02	3.92
Pot Capacity-1 Maneuver	294	-	-	147	-	-	34	10	231	58	10	365
Stage 1	-	-	-	-	-	-	46	117	-	126	233	-
Stage 2	-	-	-	-	-	-	456	233	-	322	117	-
Time blocked-Platoon, %		-	-		-	-						
Mov Capacity-1 Maneuver	294	-	-	147	-	-	30	8	231	39	8	365
Mov Capacity-2 Maneuver	-	-	-	-	-	-	30	8	-	39	8	-
Stage 1	-	-	-	-	-	-	43	110	-	119	209	-
Stage 2	-	-	-	-	-	-	407	209	-	231	110	-

Approach	EB	WB	NB	SB
HCM Control Delay, s	0.2	0.4	25.4	14.9
HCM LOS			D	B

Minor Lane / Major Mvmt	NBLn1	EBL	EBT	EBR	WBL	WBT	WBR	SBLn1
Capacity (veh/h)	231	294	-	-	147	-	-	365
HCM Lane V/C Ratio	0.24	0.059	-	-	0.104	-	-	0.006
HCM Control Delay (s)	25.4	18.013	-	-	32.298	-	-	14.9
HCM Lane LOS	D	C			D			B
HCM 95th %tile Q(veh)	0.91	0.188	-	-	0.339	-	-	0.018

Notes

~ : Volume Exceeds Capacity; $: Delay Exceeds 300 Seconds; Error : Computation Not Defined

Intersection	
Intersection Delay, s/veh	8.4
Intersection LOS	A

Movement	EBL	EBT	EBR	WBL	WBT	WBR	NBL	NBT	NBR	SBL	SBT	SBR
Vol, veh/h	11	18	1	24	11	45	0	79	53	91	88	8
Peak Hour Factor	0.92	0.92	0.92	0.92	0.92	0.92	0.92	0.92	0.92	0.92	0.92	0.92
Heavy Vehicles, %	2	2	2	2	2	2	2	2	2	2	2	2
Mvmt Flow	12	20	1	26	12	49	0	86	58	99	96	9
Number of Lanes	0	1	0	0	1	0	0	1	0	0	1	0

Approach	EB	WB	NB	SB
Opposing Approach	WB	EB	SB	NB
Opposing Lanes	1	1	1	1
Conflicting Approach Left	SB	NB	EB	WB
Conflicting Lanes Left	1	1	1	1
Conflicting Approach Right	NB	SB	WB	EB
Conflicting Lanes Right	1	1	1	1
HCM Control Delay	8.1	8	8.1	8.9
HCM LOS	A	A	A	A

Lane	NBLn1	EBLn1	WBLn1	SBLn1
Vol Left, %	0%	37%	30%	49%
Vol Thru, %	60%	60%	14%	47%
Vol Right, %	40%	3%	56%	4%
Sign Control	Stop	Stop	Stop	Stop
Traffic Vol by Lane	132	30	80	187
LT Vol	79	18	11	88
Through Vol	53	1	45	8
RT Vol	0	11	24	91
Lane Flow Rate	143	33	87	203
Geometry Grp	1	1	1	1
Degree of Util (X)	0.167	0.044	0.108	0.25
Departure Headway (Hd)	4.193	4.864	4.467	4.433
Convergence, Y/N	Yes	Yes	Yes	Yes
Cap	857	737	803	811
Service Time	2.213	2.89	2.49	2.452
HCM Lane V/C Ratio	0.167	0.045	0.108	0.25
HCM Control Delay	8.1	8.1	8	8.9
HCM Lane LOS	A	A	A	A
HCM 95th-tile Q	0.6	0.1	0.4	1

Notes

~ : Volume Exceeds Capacity; $: Delay Exceeds 300 Seconds; Error : Computation Not Defined

Movement	EBL	EBT	EBR	WBL	WBT	WBR	NBL	NBT	NBR	SBL	SBT	SBR
Lane Configurations												
Volume (veh/h)	65	35	48	60	19	207	31	2193	92	241	2041	39
Number	3	8	18	7	4	14	1	6	16	5	2	12
Initial Q (Qb), veh	0	0	0	0	0	0	0	0	0	0	0	0
Ped-Bike Adj(A_pbT)	1.00		1.00	1.00		1.00	1.00		1.00	1.00		1.00
Parking Bus Adj	1.00	1.00	1.00	1.00	1.00	1.00	1.00	1.00	1.00	1.00	1.00	1.00
Adj Sat Flow veh/h/ln	186.3	186.3	190.0	186.3	193.7	186.3	186.3	186.3	190.0	186.3	186.3	190.0
Lanes	1	1	0	1	1	1	1	3	0	1	3	0
Cap, veh/h	362	125	189	324	358	293	150	2843	127	359	3442	66
Arrive On Green	0.07	0.19	0.18	0.07	0.18	0.18	0.08	1.00	1.00	0.13	0.63	0.62
Sat Flow, veh/h	1774	668	1016	1774	1937	1583	1774	5308	238	1774	5465	105
Grp Volume(v), veh/h	96	0	121	92	25	252	48	1599	788	317	1736	864
Grp Sat Flow(s),veh/h/ln	1774	0	1684	1774	1937	1583	1774	1863	1821	1774	1863	1844
Q Serve(g_s), s	6.7	0.0	9.9	6.4	1.7	24.2	1.8	0.0	0.0	16.2	50.6	51.3
Cycle Q Clear(g_c), s	6.7	0.0	9.9	6.4	1.7	24.2	1.8	0.0	0.0	16.2	50.6	51.3
Prop In Lane	1.00		0.60	1.00		1.00	1.00		0.13	1.00		0.06
Lane Grp Cap(c), veh/h	362	0	314	324	358	293	150	1995	975	359	2346	1161
V/C Ratio(X)	0.26	0.00	0.39	0.28	0.07	0.86	0.32	0.80	0.81	0.88	0.74	0.74
Avail Cap(c_a), veh/h	373	0	314	360	383	313	206	1995	975	362	2346	1161
HCM Platoon Ratio	1.00	1.00	1.00	1.00	1.00	1.00	2.00	2.00	2.00	1.00	1.00	1.00
Upstream Filter(I)	1.00	0.00	1.00	1.00	1.00	1.00	1.00	1.00	1.00	1.00	1.00	1.00
Uniform Delay (d), s/veh	45.8	0.0	56.3	46.4	52.8	61.9	20.7	0.0	0.0	38.7	20.1	20.3
Incr Delay (d2), s/veh	0.4	0.0	0.8	0.5	0.1	20.0	1.2	3.5	7.2	21.6	2.1	4.3
Initial Q Delay(d3),s/veh	0.0	0.0	0.0	0.0	0.0	0.0	0.0	0.0	0.0	0.0	0.0	0.0
%ile Back of Q (50%), veh/ln	3.1	0.0	4.5	3.0	0.9	11.6	0.8	1.0	1.9	15.1	23.1	24.0
Lane Grp Delay (d), s/veh	46.2	0.0	57.1	46.8	52.8	81.9	22.0	3.5	7.2	60.2	22.3	24.6
Lane Grp LOS	D		E	D	D	F	C	A	A	E	C	C
Approach Vol, veh/h		217			369			2435			2917	
Approach Delay, s/veh		52.3			71.2			5.1			27.1	
Approach LOS		D			E			A			C	

Timer												
Assigned Phs	3	8		7	4		1	6		5	2	
Phs Duration (G+Y+Rc), s	14.1	32.3		13.8	32.0		9.0	87.0		23.8	101.8	
Change Period (Y+Rc), s	5.5	5.5		5.5	5.5		5.5	5.5		5.5	5.5	
Max Green Setting (Gmax), s	9.5	26.5		11.5	28.5		8.5	81.5		18.5	91.5	
Max Q Clear Time (g_c+I1), s	8.7	11.9		8.4	26.2		3.8	2.0		18.2	53.3	
Green Ext Time (p_c), s	0.0	1.5		0.1	0.3		0.0	70.1		0.0	35.9	

Intersection Summary												
HCM 2010 Ctrl Delay			21.7									
HCM 2010 LOS			C									

Notes

Movement	EBU	EBT	EBR	WBL	WBT	NBL	NBR
Lane Configurations							
Volume (veh/h)	18	1946	30	95	2065	30	221
Number		6	16	5	2	7	14
Initial Q (Qb), veh		0	0	0	0	0	0
Ped-Bike Adj(A_pbT)			1.00	1.00		1.00	1.00
Parking Bus Adj		1.00	1.00	1.00	1.00	1.00	1.00
Adj Sat Flow veh/h/ln		186.3	190.0	186.3	186.3	186.3	186.3
Lanes		3	0	1	3	1	2
Cap, veh/h		4111	80	177	4671	214	383
Arrive On Green		0.75	0.74	0.06	0.84	0.12	0.12
Sat Flow, veh/h		5463	106	1774	5588	1774	3167
Grp Volume(v), veh/h		1367	678	122	2129	48	260
Grp Sat Flow(s),veh/h/ln		1863	1844	1774	1863	1774	1583
Q Serve(g_s), s		19.8	19.9	3.9	14.0	3.4	10.9
Cycle Q Clear(g_c), s		19.8	19.9	3.9	14.0	3.4	10.9
Prop In Lane			0.06	1.00		1.00	1.00
Lane Grp Cap(c), veh/h		2803	1387	177	4671	214	383
V/C Ratio(X)		0.49	0.49	0.69	0.46	0.22	0.68
Avail Cap(c_a), veh/h		2803	1387	260	4671	411	733
HCM Platoon Ratio		1.00	1.00	1.00	1.00	1.00	1.00
Upstream Filter(I)		1.00	1.00	1.00	1.00	1.00	1.00
Uniform Delay (d), s/veh		6.7	6.7	53.1	3.0	54.9	58.2
Incr Delay (d2), s/veh		0.6	1.2	4.7	0.3	0.5	2.1
Initial Q Delay(d3),s/veh		0.0	0.0	0.0	0.0	0.0	0.0
%ile Back of Q (50%), veh/ln		8.0	8.2	4.6	4.5	1.6	0.1
Lane Grp Delay (d), s/veh		7.3	8.0	57.7	3.3	55.4	60.3
Lane Grp LOS		A	A	E	A	E	E
Approach Vol, veh/h		2045			2251	308	
Approach Delay, s/veh		7.5			6.3	59.6	
Approach LOS		A			A	E	

Timer							
Assigned Phs		6		5	2		
Phs Duration (G+Y+Rc), s		107.0		11.5	118.5		
Change Period (Y+Rc), s		5.5		5.5	5.5		
Max Green Setting (Gmax), s		101.5		12.5	106.5		
Max Q Clear Time (g_c+I1), s		21.9		5.9	16.0		
Green Ext Time (p_c), s		59.7		0.2	65.6		

Intersection Summary							
HCM 2010 Ctrl Delay			10.4				
HCM 2010 LOS			B				

Notes

Movement	EBL	EBT	EBR	WBL	WBT	WBR	NBL	NBT	NBR	SBL	SBT	SBR
Lane Configurations												
Volume (veh/h)	202	1330	309	373	1179	435	298	1678	376	401	1253	182
Number	1	6	16	5	2	12	7	4	14	3	8	18
Initial Q (Qb), veh	0	0	0	0	0	0	0	0	0	0	0	0
Ped-Bike Adj(A_pbT)	1.00		1.00	1.00		1.00	1.00		1.00	1.00		1.00
Parking Bus Adj	1.00	1.00	1.00	1.00	1.00	1.00	1.00	1.00	1.00	1.00	1.00	1.00
Adj Sat Flow veh/h/ln	186.3	186.3	186.3	186.3	186.3	190.0	186.3	186.3	186.3	186.3	186.3	186.3
Lanes	2	3	1	2	3	0	2	3	1	2	3	1
Cap, veh/h	409	1921	544	409	1328	504	581	1921	544	409	1642	465
Arrive On Green	0.16	0.46	0.46	0.12	0.34	0.33	0.22	0.46	0.00	0.24	0.59	0.00
Sat Flow, veh/h	3442	5588	1583	3442	3865	1465	3442	5588	1583	3442	5588	1583
Grp Volume(v), veh/h	342	1400	391	381	1236	535	343	1844	0	427	1474	0
Grp Sat Flow(s),veh/h/ln	1721	1863	1583	1721	1863	1604	1721	1863	1583	1721	1863	1583
Q Serve(g_s), s	15.4	32.6	31.9	17.6	52.1	52.6	14.3	51.1	0.0	19.0	36.8	0.0
Cycle Q Clear(g_c), s	15.4	32.6	31.9	17.6	52.1	52.6	14.3	51.1	0.0	19.0	36.8	0.0
Prop In Lane	1.00		1.00	1.00		0.91	1.00		1.00	1.00		1.00
Lane Grp Cap(c), veh/h	409	1921	544	409	1281	551	581	1921	544	409	1642	465
V/C Ratio(X)	0.84	0.73	0.72	0.93	0.96	0.97	0.59	0.96	0.00	1.04	0.90	0.00
Avail Cap(c_a), veh/h	409	1921	544	409	1281	551	581	1921	544	409	1642	465
HCM Platoon Ratio	1.33	1.33	1.33	1.00	1.00	1.00	1.33	1.33	1.33	2.00	2.00	2.00
Upstream Filter(I)	1.00	1.00	1.00	1.00	1.00	1.00	1.00	1.00	0.00	1.00	1.00	0.00
Uniform Delay (d), s/veh	65.9	37.4	37.2	69.9	51.5	52.6	57.1	42.4	0.0	61.0	30.9	0.0
Incr Delay (d2), s/veh	18.1	2.5	7.9	30.4	18.0	31.8	4.4	13.0	0.0	56.7	8.2	0.0
Initial Q Delay(d3),s/veh	0.0	0.0	0.0	0.0	0.0	0.0	0.0	0.0	0.0	0.0	0.0	0.0
%ile Back of Q (50%), veh/ln	7.7	15.0	13.2	9.6	27.7	26.4	6.5	25.1	0.0	10.9	14.9	0.0
Lane Grp Delay (d), s/veh	84.0	39.8	45.1	100.2	69.6	84.4	61.5	55.4	0.0	117.7	39.1	0.0
Lane Grp LOS	F	D	D	F	E	F	E	E		F	D	
Approach Vol, veh/h		2133			2152			2187			1901	
Approach Delay, s/veh		47.9			78.7			56.3			56.7	
Approach LOS		D			E			E			E	

Timer												
Assigned Phs	1	6		5	2		7	4		3	8	
Phs Duration (G+Y+Rc), s	22.0	58.0		22.0	58.0		30.0	58.0		22.0	50.0	
Change Period (Y+Rc), s	6.0	6.0		6.0	6.0		6.0	6.0		6.0	6.0	
Max Green Setting (Gmax), s	16.0	52.0		16.0	52.0		24.0	52.0		16.0	44.0	
Max Q Clear Time (g_c+I1), s	17.4	34.6		19.6	54.6		16.3	53.1		21.0	38.8	
Green Ext Time (p_c), s	0.0	10.2		0.0	0.0		0.9	0.0		0.0	3.8	

Intersection Summary												
HCM 2010 Ctrl Delay			60.0									
HCM 2010 LOS			E									

Notes

Movement	EBL	EBT	EBR	WBL	WBT	WBR	NBL	NBT	NBR	SBL	SBT	SBR
Lane Configurations												
Volume (veh/h)	45	38	112	69	53	66	157	2333	105	56	1850	83
Number	3	8	18	7	4	14	1	6	16	5	2	12
Initial Q (Qb), veh	0	0	0	0	0	0	0	0	0	0	0	0
Ped-Bike Adj(A_pbT)	1.00		1.00	1.00		1.00	1.00		1.00	1.00		1.00
Parking Bus Adj	1.00	1.00	1.00	1.00	1.00	1.00	1.00	1.00	1.00	1.00	1.00	1.00
Adj Sat Flow veh/h/ln	186.3	193.7	186.3	186.3	193.7	190.0	186.3	186.3	186.3	186.3	193.7	186.3
Lanes	1	1	1	1	1	0	1	3	1	1	3	1
Cap, veh/h	244	255	208	329	110	143	272	3594	1018	180	3641	992
Arrive On Green	0.07	0.13	0.13	0.08	0.14	0.13	0.04	0.43	0.43	0.10	1.00	1.00
Sat Flow, veh/h	1774	1937	1583	1774	767	995	1774	5588	1583	1774	5812	1583
Grp Volume(v), veh/h	80	55	140	105	0	170	160	2405	138	72	2202	102
Grp Sat Flow(s),veh/h/ln	1774	1937	1583	1774	0	1762	1774	1863	1583	1774	1937	1583
Q Serve(g_s), s	4.8	3.2	10.7	6.2	0.0	11.7	3.5	43.9	6.7	1.7	0.0	0.0
Cycle Q Clear(g_c), s	4.8	3.2	10.7	6.2	0.0	11.7	3.5	43.9	6.7	1.7	0.0	0.0
Prop In Lane	1.00		1.00	1.00		0.56	1.00		1.00	1.00		1.00
Lane Grp Cap(c), veh/h	244	255	208	329	0	254	272	3594	1018	180	3641	992
V/C Ratio(X)	0.33	0.22	0.67	0.32	0.00	0.67	0.59	0.67	0.14	0.40	0.60	0.10
Avail Cap(c_a), veh/h	301	638	522	363	0	580	379	3594	1018	247	3641	992
HCM Platoon Ratio	1.00	1.00	1.00	1.00	1.00	1.00	0.67	0.67	0.67	2.00	2.00	2.00
Upstream Filter(I)	1.00	1.00	1.00	1.00	0.00	1.00	1.00	1.00	1.00	1.00	1.00	1.00
Uniform Delay (d), s/veh	43.0	49.5	52.7	40.2	0.0	52.1	8.6	25.4	14.9	20.5	0.0	0.0
Incr Delay (d2), s/veh	0.8	0.4	3.7	0.6	0.0	3.1	2.0	1.0	0.3	1.4	0.8	0.2
Initial Q Delay(d3),s/veh	0.0	0.0	0.0	0.0	0.0	0.0	0.0	0.0	0.0	0.0	0.0	0.0
%ile Back of Q (50%), veh/ln	2.3	1.7	4.6	2.8	0.0	5.6	1.8	21.3	2.8	2.2	0.3	0.1
Lane Grp Delay (d), s/veh	43.7	49.9	56.5	40.8	0.0	55.2	10.6	26.4	15.1	21.9	0.8	0.2
Lane Grp LOS	D	D	E	D		E	B	C	B	C	A	A
Approach Vol, veh/h		275			275			2703			2376	
Approach Delay, s/veh		51.4			49.7			24.9			1.4	
Approach LOS		D			D			C			A	

Timer												
Assigned Phs	3	8		7	4		1	6		5	2	
Phs Duration (G+Y+Rc), s	12.0	19.8		13.5	21.4		11.3	85.0		9.2	82.9	
Change Period (Y+Rc), s	5.5	5.5		5.5	5.5		5.5	5.5		5.5	5.5	
Max Green Setting (Gmax), s	10.5	39.5		10.5	39.5		13.5	79.5		8.5	74.5	
Max Q Clear Time (g_c+I1), s	6.8	12.7		8.2	13.7		5.5	45.9		3.7	2.0	
Green Ext Time (p_c), s	0.1	1.5		0.1	1.5		0.3	31.8		0.1	64.7	

Intersection Summary												
HCM 2010 Ctrl Delay			17.5									
HCM 2010 LOS			B									

Notes

Movement	EBL	EBT	EBR	WBL	WBT	WBR	NBL	NBT	NBR	SBL	SBT	SBR
Lane Configurations												
Volume (veh/h)	97	5	82	7	25	105	130	2248	9	47	1908	73
Number	3	8	18	7	4	14	1	6	16	5	2	12
Initial Q (Qb), veh	0	0	0	0	0	0	0	0	0	0	0	0
Ped-Bike Adj(A_pbT)	1.00		1.00	1.00		1.00	1.00		1.00	1.00		1.00
Parking Bus Adj	1.00	1.00	1.00	1.00	1.00	1.00	1.00	1.00	1.00	1.00	1.00	1.00
Adj Sat Flow veh/h/ln	186.3	193.7	190.0	190.0	186.3	186.3	186.3	186.3	190.0	186.3	186.3	190.0
Lanes	1	1	0	0	1	1	1	3	0	1	3	0
Cap, veh/h	320	42	329	52	172	173	240	3710	21	180	3506	139
Arrive On Green	0.09	0.22	0.22	0.11	0.11	0.11	0.06	0.67	0.66	0.09	1.00	1.00
Sat Flow, veh/h	1774	191	1484	194	1579	1583	1774	5552	31	1774	5340	211
Grp Volume(v), veh/h	123	0	114	46	0	114	134	1694	846	63	1659	821
Grp Sat Flow(s),veh/h/ln	1774	0	1675	1773	0	1583	1774	1863	1857	1774	1863	1825
Q Serve(g_s), s	8.1	0.0	7.8	0.0	0.0	9.5	3.1	38.1	38.2	1.5	0.0	0.0
Cycle Q Clear(g_c), s	8.1	0.0	7.8	3.1	0.0	9.5	3.1	38.1	38.2	1.5	0.0	0.0
Prop In Lane	1.00		0.89	0.20		1.00	1.00		0.02	1.00		0.12
Lane Grp Cap(c), veh/h	320	0	372	225	0	173	240	2489	1241	180	2446	1198
V/C Ratio(X)	0.38	0.00	0.31	0.20	0.00	0.66	0.56	0.68	0.68	0.35	0.68	0.69
Avail Cap(c_a), veh/h	352	0	584	410	0	345	333	2489	1241	243	2446	1198
HCM Platoon Ratio	1.00	1.00	1.00	1.00	1.00	1.00	1.00	1.00	1.00	2.00	2.00	2.00
Upstream Filter(I)	1.00	0.00	1.00	1.00	0.00	1.00	1.00	1.00	1.00	1.00	1.00	1.00
Uniform Delay (d), s/veh	45.7	0.0	44.7	56.0	0.0	58.9	7.1	13.9	13.9	15.0	0.0	0.0
Incr Delay (d2), s/veh	0.8	0.0	0.5	0.4	0.0	4.3	2.0	1.5	3.0	1.2	1.5	3.2
Initial Q Delay(d3),s/veh	0.0	0.0	0.0	0.0	0.0	0.0	0.0	0.0	0.0	0.0	0.0	0.0
%ile Back of Q (50%), veh/ln	3.8	0.0	3.5	1.5	0.0	4.1	1.4	16.3	16.8	0.9	0.5	1.1
Lane Grp Delay (d), s/veh	46.5	0.0	45.2	56.5	0.0	63.2	9.1	15.4	17.0	16.1	1.5	3.2
Lane Grp LOS	D		D	E		E	A	B	B	B	A	A
Approach Vol, veh/h		237			160			2674			2543	
Approach Delay, s/veh		45.9			61.2			15.6			2.4	
Approach LOS		D			E			B			A	

Timer												
Assigned Phs	3	8			4		1	6		5	2	
Phs Duration (G+Y+Rc), s	15.5	33.6			18.0		10.7	95.0		9.1	93.4	
Change Period (Y+Rc), s	5.5	5.5			5.5		5.5	5.5		5.5	5.5	
Max Green Setting (Gmax), s	12.5	45.5			27.5		12.5	89.5		8.5	85.5	
Max Q Clear Time (g_c+I1), s	10.1	9.8			11.5		5.1	40.2		3.5	2.0	
Green Ext Time (p_c), s	0.1	1.2			1.0		0.2	45.5		0.1	73.3	

Intersection Summary												
HCM 2010 Ctrl Delay			12.2									
HCM 2010 LOS			B									

Notes

Movement	EBL	EBT	EBR	WBL	WBT	WBR	NBL	NBT	NBR	SBL	SBT	SBR
Lane Configurations												
Volume (veh/h)	18	1872	42	87	1492	12	101	1	53	20	1	25
Number	1	6	16	5	2	12	7	4	14	3	8	18
Initial Q (Qb), veh	0	0	0	0	0	0	0	0	0	0	0	0
Ped-Bike Adj(A_pbT)	1.00		1.00	1.00		1.00	1.00		1.00	1.00		1.00
Parking Bus Adj	1.00	1.00	1.00	1.00	1.00	1.00	1.00	1.00	1.00	1.00	1.00	1.00
Adj Sat Flow veh/h/ln	186.3	186.3	186.3	186.3	186.3	190.0	186.3	186.3	190.0	186.3	186.3	190.0
Lanes	1	3	1	1	3	0	2	1	0	1	1	0
Cap, veh/h	325	3880	1099	292	3924	39	515	6	169	183	14	119
Arrive On Green	0.06	0.92	0.92	0.12	1.00	1.00	0.07	0.11	0.10	0.04	0.08	0.07
Sat Flow, veh/h	1774	5588	1583	1774	5524	55	3442	54	1537	1774	165	1443
Grp Volume(v), veh/h	41	1971	76	164	1157	575	151	0	117	36	0	39
Grp Sat Flow(s),veh/h/ln	1774	1863	1583	1774	1863	1853	1721	0	1591	1774	0	1608
Q Serve(g_s), s	0.8	6.6	0.5	3.1	0.0	0.0	4.8	0.0	9.2	2.3	0.0	3.0
Cycle Q Clear(g_c), s	0.8	6.6	0.5	3.1	0.0	0.0	4.8	0.0	9.2	2.3	0.0	3.0
Prop In Lane	1.00		1.00	1.00		0.03	1.00		0.97	1.00		0.90
Lane Grp Cap(c), veh/h	325	3880	1099	292	2646	1316	515	0	175	183	0	132
V/C Ratio(X)	0.13	0.51	0.07	0.56	0.44	0.44	0.29	0.00	0.67	0.20	0.00	0.29
Avail Cap(c_a), veh/h	386	3880	1099	324	2646	1316	534	0	442	270	0	471
HCM Platoon Ratio	1.33	1.33	1.33	2.00	2.00	2.00	1.00	1.00	1.00	1.00	1.00	1.00
Upstream Filter(I)	0.79	0.79	0.79	1.00	1.00	1.00	1.00	0.00	1.00	1.00	0.00	1.00
Uniform Delay (d), s/veh	4.5	1.8	1.5	4.7	0.0	0.0	44.0	0.0	56.1	50.6	0.0	56.6
Incr Delay (d2), s/veh	0.1	0.4	0.1	1.8	0.5	1.1	0.3	0.0	4.3	0.5	0.0	1.2
Initial Q Delay(d3),s/veh	0.0	0.0	0.0	0.0	0.0	0.0	0.0	0.0	0.0	0.0	0.0	0.0
%ile Back of Q (50%), veh/ln	0.3	1.7	0.2	1.0	0.2	0.4	2.1	0.0	4.1	1.1	0.0	1.3
Lane Grp Delay (d), s/veh	4.6	2.1	1.6	6.5	0.5	1.1	44.3	0.0	60.4	51.2	0.0	57.8
Lane Grp LOS	A	A	A	A	A	A	D		E	D		E
Approach Vol, veh/h		2088			1896			268			75	
Approach Delay, s/veh		2.2			1.2			51.3			54.6	
Approach LOS		A			A			D			D	

Timer												
Assigned Phs	1	6		5	2		7	4		3	8	
Phs Duration (G+Y+Rc), s	8.6	93.0		10.7	95.1		12.3	17.3		8.7	13.7	
Change Period (Y+Rc), s	5.5	5.5		5.5	5.5		5.5	5.5		5.5	5.5	
Max Green Setting (Gmax), s	7.5	87.5		7.5	87.5		7.5	33.5		9.5	35.5	
Max Q Clear Time (g_c+I1), s	2.8	8.6		5.1	2.0		6.8	11.2		4.3	5.0	
Green Ext Time (p_c), s	0.0	50.8		0.1	53.3		0.0	0.6		0.0	0.7	

Intersection Summary												
HCM 2010 Ctrl Delay			5.7									
HCM 2010 LOS			A									

Notes

Lane Group	EBL	EBT	EBR	WBL	WBT	WBR	NBL	NBT	NBR	SBL	SBT	SBR
Lane Configurations												
Volume (vph)	124	1589	57	63	1528	49	86	139	110	69	144	173
Ideal Flow (vphpl)	1900	1900	1900	1900	1900	1900	1900	1900	1900	1900	1900	1900
Storage Length (ft)	150		0	200		0	100		140	100		120
Storage Lanes	1		0	1		0	1		1	1		0
Taper Length (ft)	25			25			25			25		
Lane Util. Factor	1.00	0.91	0.91	1.00	0.91	0.91	1.00	1.00	1.00	1.00	1.00	1.00
Frt		0.993			0.995				0.850			0.850
Flt Protected	0.950			0.950			0.950			0.950		
Satd. Flow (prot)	1770	5050	0	1770	5060	0	1770	1863	1583	1770	1863	1583
Flt Permitted	0.058			0.090			0.290			0.471		
Satd. Flow (perm)	108	5050	0	168	5060	0	540	1863	1583	877	1863	1583
Right Turn on Red			Yes			Yes			Yes			Yes
Satd. Flow (RTOR)		7			5				170			254
Link Speed (mph)		40			40			30			30	
Link Distance (ft)		907			950			997			322	
Travel Time (s)		15.5			16.2			22.7			7.3	
Peak Hour Factor	0.59	0.94	0.68	0.90	0.89	0.86	0.89	0.94	0.90	0.73	0.91	0.68
Adj. Flow (vph)	210	1690	84	70	1717	57	97	148	122	95	158	254
Shared Lane Traffic (%)												
Lane Group Flow (vph)	210	1774	0	70	1774	0	97	148	122	95	158	254
Enter Blocked Intersection	No	No	No	No	No	No	No	No	No	No	No	No
Lane Alignment	Left	Left	Right	Left	Left	Right	Left	Left	Right	Left	Left	Right
Median Width(ft)		12			12			12			12	
Link Offset(ft)		0			0			0			0	
Crosswalk Width(ft)		16			16			16			16	
Two way Left Turn Lane												
Headway Factor	1.00	1.00	1.00	1.00	1.00	1.00	1.00	1.00	1.00	1.00	1.00	1.00
Turning Speed (mph)	15		9	15		9	15		9	15		9
Number of Detectors	1	1		1	1		1	1	1	1	1	1
Detector Template												
Leading Detector (ft)	50	50		50	50		50	50	50	50	50	50
Trailing Detector (ft)	0	0		0	0		0	0	0	0	0	0
Detector 1 Position(ft)	0	0		0	0		0	0	0	0	0	0
Detector 1 Size(ft)	50	50		50	50		50	50	50	50	50	50
Detector 1 Type	Cl+Ex	Cl+Ex		Cl+Ex	Cl+Ex		Cl+Ex	Cl+Ex	Cl+Ex	Cl+Ex	Cl+Ex	Cl+Ex
Detector 1 Channel												
Detector 1 Extend (s)	0.0	0.0		0.0	0.0		0.0	0.0	0.0	0.0	0.0	0.0
Detector 1 Queue (s)	0.0	0.0		0.0	0.0		0.0	0.0	0.0	0.0	0.0	0.0
Detector 1 Delay (s)	0.0	0.0		0.0	0.0		0.0	0.0	0.0	0.0	0.0	0.0
Turn Type	pm+pt	NA		pm+pt	NA		custom	NA	Perm	pm+pt	NA	custom
Protected Phases	1	6 14		13	2 10		15	4 12		11	8 16	
Permitted Phases	6 14			2 10			4		4 12	8 16		8
Detector Phase	1	6 14		13	2 10		15	4 12	4 12	11	8 16	8
Switch Phase												
Minimum Initial (s)	4.0			4.0			4.0			4.0		4.0
Minimum Split (s)	13.0			13.0			13.0			13.0		16.0
Total Split (s)	16.0			16.0			13.0			13.0		20.0
Total Split (%)	10.0%			10.0%			8.1%			8.1%		12.5%

Lane Group	ø2	ø4	ø6	ø10	ø12	ø14	ø16
Lane Configurations							
Volume (vph)							
Ideal Flow (vphpl)							
Storage Length (ft)							
Storage Lanes							
Taper Length (ft)							
Lane Util. Factor							
Frt							
Flt Protected							
Satd. Flow (prot)							
Flt Permitted							
Satd. Flow (perm)							
Right Turn on Red							
Satd. Flow (RTOR)							
Link Speed (mph)							
Link Distance (ft)							
Travel Time (s)							
Peak Hour Factor							
Adj. Flow (vph)							
Shared Lane Traffic (%)							
Lane Group Flow (vph)							
Enter Blocked Intersection							
Lane Alignment							
Median Width(ft)							
Link Offset(ft)							
Crosswalk Width(ft)							
Two way Left Turn Lane							
Headway Factor							
Turning Speed (mph)							
Number of Detectors							
Detector Template							
Leading Detector (ft)							
Trailing Detector (ft)							
Detector 1 Position(ft)							
Detector 1 Size(ft)							
Detector 1 Type							
Detector 1 Channel							
Detector 1 Extend (s)							
Detector 1 Queue (s)							
Detector 1 Delay (s)							
Turn Type							
Protected Phases	2	4	6	10	12	14	16
Permitted Phases							
Detector Phase							
Switch Phase							
Minimum Initial (s)	4.0	4.0	4.0	4.0	4.0	4.0	4.0
Minimum Split (s)	29.5	16.0	24.5	22.0	22.0	22.0	22.0
Total Split (s)	35.0	20.0	51.0	56.0	20.0	40.0	20.0
Total Split (%)	22%	13%	32%	35%	13%	25%	13%

Lane Group	EBL	EBT	EBR	WBL	WBT	WBR	NBL	NBT	NBR	SBL	SBT	SBR
Maximum Green (s)	10.5			10.5			7.5			7.5		14.5
Yellow Time (s)	3.5			3.5			3.5			3.5		3.5
All-Red Time (s)	2.0			2.0			2.0			2.0		2.0
Lost Time Adjust (s)	-2.5			-2.5			-3.0			-2.5		-2.5
Total Lost Time (s)	3.0			3.0			2.5			3.0		3.0
Lead/Lag	Lead			Lead			Lead			Lead		
Lead-Lag Optimize?	Yes			Yes			Yes			Yes		
Vehicle Extension (s)	3.0			3.0			3.0			3.0		3.0
Recall Mode	None			None			None			None		None
Walk Time (s)												5.0
Flash Dont Walk (s)												2.0
Pedestrian Calls (#/hr)												0
Act Effct Green (s)	91.8	91.8		88.7	88.7		24.1	30.4	30.4	40.3	30.4	13.3
Actuated g/C Ratio	0.57	0.57		0.55	0.55		0.15	0.19	0.19	0.25	0.19	0.08
v/c Ratio	1.07	0.61		0.36	0.63		0.60	0.42	0.28	0.35	0.45	0.70
Control Delay	127.3	12.5		20.9	13.0		56.8	32.9	2.4	26.7	33.5	18.1
Queue Delay	0.0	0.0		0.0	0.0		0.0	0.0	0.0	0.0	0.0	0.0
Total Delay	127.3	12.5		20.9	13.0		56.8	32.9	2.4	26.7	33.5	18.1
LOS	F	B		C	B		E	C	A	C	C	B
Approach Delay		24.6			13.3			29.1			24.5	
Approach LOS		C			B			C			C	

Intersection Summary	
Area Type:	Other
Cycle Length: 160	
Actuated Cycle Length: 160	
Offset: 117 (73%), Referenced to phase 2:WBTL and 6:EBTL, Start of 1st Green	
Natural Cycle: 130	
Control Type: Actuated-Coordinated	
Maximum v/c Ratio: 1.07	
Intersection Signal Delay: 20.5	Intersection LOS: C
Intersection Capacity Utilization 63.2%	ICU Level of Service B
Analysis Period (min) 15	

Splits and Phases: 4296: Surveyor Blvd & Beltline Rd

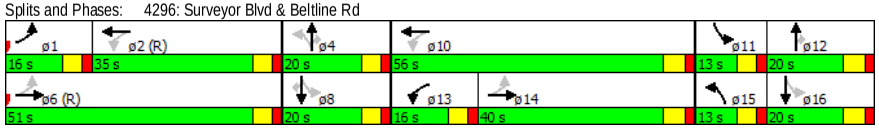

Lane Group	ø2	ø4	ø6	ø10	ø12	ø14	ø16
Maximum Green (s)	29.5	14.5	45.5	50.0	14.0	34.0	14.0
Yellow Time (s)	3.5	3.5	3.5	4.0	4.0	4.0	4.0
All-Red Time (s)	2.0	2.0	2.0	2.0	2.0	2.0	2.0
Lost Time Adjust (s)							
Total Lost Time (s)							
Lead/Lag	Lag				Lag	Lag	Lag
Lead-Lag Optimize?	Yes						
Vehicle Extension (s)	3.0	3.0	3.0	3.0	3.0	3.0	3.0
Recall Mode	C-Max	Min	C-Max	Max	Min	None	Max
Walk Time (s)	5.0	5.0	5.0	5.0	5.0	5.0	5.0
Flash Dont Walk (s)	19.0	24.0	14.0	11.0	11.0	11.0	11.0
Pedestrian Calls (#/hr)	0	0	0	0	0	0	0
Act Effct Green (s)							
Actuated g/C Ratio							
v/c Ratio							
Control Delay							
Queue Delay							
Total Delay							
LOS							
Approach Delay							
Approach LOS							

Intersection Summary

Intersection	
Intersection Delay, s/veh	0.6

Movement	EBT	EBR	WBL	WBT	NBL	NBR
Vol, veh/h	1867	16	0	0	0	44
Conflicting Peds, #/hr	0	0	0	0	0	0
Sign Control	Free	Free	Free	Free	Stop	Stop
RT Channelized	-	None	-	None	-	None
Storage Length	-	140	-	-	-	0
Veh in Median Storage, #	0	-	-	0	0	-
Grade, %	0	-	-	0	0	-
Peak Hour Factor	92	92	92	92	92	92
Heavy Vehicles, %	2	2	2	2	2	2
Mvmt Flow	2029	17	0	0	0	48

Major/Minor	Major1		Major2		Minor1	
Conflicting Flow All	0	0	2029	0	2029	1015
Stage 1	-	-	-	-	2029	-
Stage 2	-	-	-	-	0	-
Follow-up Headway	-	-	3.12	-	3.82	3.92
Pot Capacity-1 Maneuver	-	-	121	-	90	203
Stage 1	-	-	-	-	54	-
Stage 2	-	-	-	-	-	-
Time blocked-Platoon, %	-	-		-		
Mov Capacity-1 Maneuver	-	-	121	-	90	203
Mov Capacity-2 Maneuver	-	-	-	-	90	-
Stage 1	-	-	-	-	54	-
Stage 2	-	-	-	-	-	-

Approach	EB	WB	NB
HCM Control Delay, s	0	0	28.1
HCM LOS			D

Minor Lane / Major Mvmt	NBLn1	EBT	EBR	WBL	WBT
Capacity (veh/h)	203	-	-	121	-
HCM Lane V/C Ratio	0.236	-	-	-	-
HCM Control Delay (s)	28.1	-	-	0	-
HCM Lane LOS	D			A	
HCM 95th %tile Q(veh)	0.884	-	-	0	-

Notes

~ : Volume Exceeds Capacity; $: Delay Exceeds 300 Seconds; Error : Computation Not Defined

Intersection	
Intersection Delay, s/veh	1.2

Movement	EBL	EBR	NBL	NBT	SBT	SBR
Vol, veh/h	0	36	51	2376	2006	35
Conflicting Peds, #/hr	0	0	0	0	0	0
Sign Control	Stop	Stop	Free	Free	Free	Free
RT Channelized	-	None	-	None	-	None
Storage Length	-	0	125	-	-	-
Veh in Median Storage, #	0	-	-	0	0	-
Grade, %	0	-	-	0	0	-
Peak Hour Factor	92	92	92	92	92	92
Heavy Vehicles, %	2	2	2	2	2	2
Mvmt Flow	0	39	55	2583	2180	38

Major/Minor	Minor2		Major1		Major2	
Conflicting Flow All	3376	1109	2218	0	-	0
Stage 1	2232	-	-	-	-	-
Stage 2	1144	-	-	-	-	-
Follow-up Headway	3.82	3.92	3.12	-	-	-
Pot Capacity-1 Maneuver	16	175	97	-	-	-
Stage 1	40	-	-	-	-	-
Stage 2	239	-	-	-	-	-
Time blocked-Platoon, %				-	-	-
Mov Capacity-1 Maneuver	7	175	97	-	-	-
Mov Capacity-2 Maneuver	7	-	-	-	-	-
Stage 1	40	-	-	-	-	-
Stage 2	103	-	-	-	-	-

Approach	EB	NB	SB
HCM Control Delay, s	31.4	1.7	0
HCM LOS	D		

Minor Lane / Major Mvmt	NBL	NBT	EBLn1	SBU	SBT	SBR
Capacity (veh/h)	97	-	175	-	-	-
HCM Lane V/C Ratio	0.571	-	0.224	-	-	-
HCM Control Delay (s)	82.959	-	31.4	-	-	-
HCM Lane LOS	F		D			
HCM 95th %tile Q(veh)	2.65	-	0.824	-	-	-

Notes

~ : Volume Exceeds Capacity; $: Delay Exceeds 300 Seconds; Error : Computation Not Defined

Intersection	
Intersection Delay, s/veh	5.4

Movement	EBL	EBT	EBR	WBL	WBT	WBR	NBL	NBT	NBR	SBL	SBT	SBR
Vol, veh/h	1	0	4	13	0	114	20	2755	32	33	1953	9
Conflicting Peds, #/hr	0	0	0	0	0	0	0	0	0	0	0	0
Sign Control	Stop	Stop	Stop	Stop	Stop	Stop	Free	Free	Free	Free	Free	Free
RT Channelized	-	-	None	-	-	None	-	-	None	-	-	None
Storage Length	-	-	-	-	-	0	130	-	-	125	-	-
Veh in Median Storage, #	-	0	-	-	0	-	-	0	-	-	0	-
Grade, %	-	0	-	-	0	-	-	0	-	-	0	-
Peak Hour Factor	92	92	92	92	92	92	92	92	92	92	92	92
Heavy Vehicles, %	2	2	2	2	2	2	2	2	2	2	2	2
Mvmt Flow	1	0	4	14	0	124	22	2995	35	36	2123	10

Major/Minor	Minor2			Minor1			Major1			Major2		
Conflicting Flow All	3440	5272	1066	3976	5259	1515	2133	0	0	3029	0	0
Stage 1	2199	2199	-	3055	3055	-	-	-	-	-	-	-
Stage 2	1241	3073	-	921	2204	-	-	-	-	-	-	-
Follow-up Headway	3.82	4.02	3.92	3.82	4.02	3.92	3.12	-	-	3.12	-	-
Pot Capacity-1 Maneuver	8	0	187	# 3	0	# 93	107	-	-	37	-	-
Stage 1	28	82	-	# 6	29	-	-	-	-	-	-	-
Stage 2	166	28	-	263	81	-	-	-	-	-	-	-
Time blocked-Platoon, %								-	-		-	-
Mov Capacity-1 Maneuver	-	0	187	# 0	0	# 93	107	-	-	37	-	-
Mov Capacity-2 Maneuver	-	0	-	# 0	0	-	-	-	-	-	-	-
Stage 1	22	2	-	# 5	23	-	-	-	-	-	-	-
Stage 2	-	22	-	# 7	2	-	-	-	-	-	-	-

Approach	EB	WB	NB	SB
HCM Control Delay, s	+	123	0.3	5
HCM LOS	-	F		

Minor Lane / Major Mvmt	NBL	NBT	NBR	EBLn1	WBLn1	WBLn2	SBL	SBT	SBR
Capacity (veh/h)	107	-	-	+	93	93	37	-	-
HCM Lane V/C Ratio	0.203	-	-	+	0.596	0.888	0.969	-	-
HCM Control Delay (s)	47.027	-	-	+	89.4	145.5	$ 301.562	-	-
HCM Lane LOS	E			+	F	F	F		
HCM 95th %tile Q(veh)	0.717	-	-	+	2.781	4.954	3.598	-	-

Notes

~ : Volume Exceeds Capacity; $: Delay Exceeds 300 Seconds; Error : Computation Not Defined

Intersection	
Intersection Delay, s/veh	3.7

Movement	EBL	EBT	WBT	WBR	SBL	SBR
Vol, veh/h	7	0	0	65	38	4
Conflicting Peds, #/hr	0	0	0	0	0	0
Sign Control	Free	Free	Free	Free	Stop	Stop
RT Channelized	-	None	-	None	-	None
Storage Length	-	-	-	-	0	-
Veh in Median Storage, #	-	0	0	-	0	-
Grade, %	-	0	0	-	0	-
Peak Hour Factor	92	92	92	92	92	92
Heavy Vehicles, %	2	2	2	2	2	2
Mvmt Flow	8	0	0	71	41	4

Major/Minor	Major1		Major2		Minor2	
Conflicting Flow All	71	0	-	0	50	35
Stage 1	-	-	-	-	35	-
Stage 2	-	-	-	-	15	-
Follow-up Headway	2.218	-	-	-	3.518	3.318
Pot Capacity-1 Maneuver	1529	-	-	-	959	1038
Stage 1	-	-	-	-	987	-
Stage 2	-	-	-	-	1008	-
Time blocked-Platoon, %		-	-	-		
Mov Capacity-1 Maneuver	1529	-	-	-	954	1038
Mov Capacity-2 Maneuver	-	-	-	-	954	-
Stage 1	-	-	-	-	987	-
Stage 2	-	-	-	-	1003	-

Approach	EB	WB	SB
HCM Control Delay, s	7.4	0	8.9
HCM LOS			A

Minor Lane / Major Mvmt	EBL	EBT	WBT	WBR	SBLn1
Capacity (veh/h)	1529	-	-	-	961
HCM Lane V/C Ratio	0.005	-	-	-	0.048
HCM Control Delay (s)	7.366	0	-	-	8.9
HCM Lane LOS	A	A			A
HCM 95th %tile Q(veh)	0.015	-	-	-	0.149

Notes

~ : Volume Exceeds Capacity; $: Delay Exceeds 300 Seconds; Error : Computation Not Defined

Two Way Analysis cannot be performed on an All Way Stop Intersection.

Intersection	
Intersection Delay, s/veh	5.5

Movement	EBL	EBT	EBR	WBL	WBT	WBR	NBL	NBT	NBR	SBL	SBT	SBR
Vol, veh/h	32	1803	45	118	1581	7	0	0	81	0	0	19
Conflicting Peds, #/hr	0	0	0	0	0	0	0	0	0	0	0	0
Sign Control	Free	Free	Free	Free	Free	Free	Stop	Stop	Stop	Stop	Stop	Stop
RT Channelized	-	-	None	-	-	None	-	-	None	-	-	None
Storage Length	160	-	160	175	-	-	-	-	0	-	-	0
Veh in Median Storage, #	-	0	-	-	0	-	-	0	-	-	0	-
Grade, %	-	0	-	-	0	-	-	0	-	-	0	-
Peak Hour Factor	92	92	92	92	92	92	92	92	92	92	92	92
Heavy Vehicles, %	2	2	2	2	2	2	2	2	2	2	2	2
Mvmt Flow	35	1960	49	128	1718	8	0	0	88	0	0	21

Major/Minor	Major1			Major2			Minor1			Minor2		
Conflicting Flow All	1726	0	0	1960	0	0	2973	4012	980	2832	4008	863
Stage 1	-	-	-	-	-	-	2029	2029	-	1979	1979	-
Stage 2	-	-	-	-	-	-	944	1983	-	853	2029	-
Follow-up Headway	3.12	-	-	3.12	-	-	3.82	4.02	3.92	3.82	4.02	3.92
Pot Capacity-1 Maneuver	172	-	-	131	-	-	15	3	214	19	3	256
Stage 1	-	-	-	-	-	-	37	100	-	40	106	-
Stage 2	-	-	-	-	-	-	255	105	-	290	100	-
Time blocked-Platoon, %		-	-		-	-						
Mov Capacity-1 Maneuver	172	-	-	131	-	-	1	0	214	1	0	256
Mov Capacity-2 Maneuver	-	-	-	-	-	-	1	0	-	1	0	-
Stage 1	-	-	-	-	-	-	29	80	-	32	2	-
Stage 2	-	-	-	-	-	-	5	2	-	136	80	-

Approach	EB	WB	NB	SB
HCM Control Delay, s	0.5	9.5	33.1	20.3
HCM LOS			D	C

Minor Lane / Major Mvmt	NBLn1	EBL	EBT	EBR	WBL	WBT	WBR	SBLn1
Capacity (veh/h)	214	172	-	-	131	-	-	256
HCM Lane V/C Ratio	0.411	0.202	-	-	0.979	-	-	0.081
HCM Control Delay (s)	33.1	31.16	-	-	137.912	-	-	20.3
HCM Lane LOS	D	D			F			C
HCM 95th %tile Q(veh)	1.874	0.729	-	-	6.766	-	-	0.261

Notes

~ : Volume Exceeds Capacity; $: Delay Exceeds 300 Seconds; Error : Computation Not Defined

Intersection	
Intersection Delay, s/veh	10.7
Intersection LOS	B

Movement	EBL	EBT	EBR	WBL	WBT	WBR	NBL	NBT	NBR	SBL	SBT	SBR
Vol, veh/h	14	15	3	53	20	200	2	124	85	106	124	15
Peak Hour Factor	0.92	0.92	0.92	0.92	0.92	0.92	0.92	0.92	0.92	0.92	0.92	0.92
Heavy Vehicles, %	2	2	2	2	2	2	2	2	2	2	2	2
Mvmt Flow	15	16	3	58	22	217	2	135	92	115	135	16
Number of Lanes	0	1	0	0	1	0	0	1	0	0	1	0

Approach	EB	WB	NB	SB
Opposing Approach	WB	EB	SB	NB
Opposing Lanes	1	1	1	1
Conflicting Approach Left	SB	NB	EB	WB
Conflicting Lanes Left	1	1	1	1
Conflicting Approach Right	NB	SB	WB	EB
Conflicting Lanes Right	1	1	1	1
HCM Control Delay	9	11	10.1	11.2
HCM LOS	A	B	B	B

Lane	NBLn1	EBLn1	WBLn1	SBLn1
Vol Left, %	1%	44%	19%	43%
Vol Thru, %	59%	47%	7%	51%
Vol Right, %	40%	9%	73%	6%
Sign Control	Stop	Stop	Stop	Stop
Traffic Vol by Lane	211	32	273	245
LT Vol	124	15	20	124
Through Vol	85	3	200	15
RT Vol	2	14	53	106
Lane Flow Rate	229	35	297	266
Geometry Grp	1	1	1	1
Degree of Util (X)	0.309	0.055	0.393	0.375
Departure Headway (Hd)	4.948	5.715	4.769	5.072
Convergence, Y/N	Yes	Yes	Yes	Yes
Cap	732	631	745	700
Service Time	2.948	3.715	2.858	3.172
HCM Lane V/C Ratio	0.313	0.055	0.399	0.38
HCM Control Delay	10.1	9	11	11.2
HCM Lane LOS	B	A	B	B
HCM 95th-tile Q	1.3	0.2	1.9	1.7

Notes

~ : Volume Exceeds Capacity; $: Delay Exceeds 300 Seconds; Error : Computation Not Defined

Synchro^{TM} Output – West Internal Intersection

HCM 2010 AWSC
3: Runyon Rd/East Drive & Northwest Drive (Internal Intersection) 8/6/2015

Intersection	
Intersection Delay, s/veh	7.5
Intersection LOS	A

Movement	EBL	EBT	EBR	WBL	WBT	WBR	NBL	NBT	NBR	SBL	SBT	SBR
Vol, veh/h	16	17	16	17	39	17	39	18	39	6	6	6
Peak Hour Factor	0.92	0.92	0.92	0.92	0.92	0.92	0.92	0.92	0.92	0.92	0.92	0.92
Heavy Vehicles, %	2	2	2	2	2	2	2	2	2	2	2	2
Mvmt Flow	17	18	17	18	42	18	42	20	42	7	7	7
Number of Lanes	0	1	0	0	1	0	0	1	0	0	1	0

Approach	EB	WB	NB	SB
Opposing Approach	WB	EB	SB	NB
Opposing Lanes	1	1	1	1
Conflicting Approach Left	SB	NB	EB	WB
Conflicting Lanes Left	1	1	1	1
Conflicting Approach Right	NB	SB	WB	EB
Conflicting Lanes Right	1	1	1	1
HCM Control Delay	7.4	7.6	7.6	7.3
HCM LOS	A	A	A	A

Lane	NBLn1	EBLn1	WBLn1	SBLn1
Vol Left, %	41%	33%	23%	33%
Vol Thru, %	19%	35%	53%	33%
Vol Right, %	41%	33%	23%	33%
Sign Control	Stop	Stop	Stop	Stop
Traffic Vol by Lane	96	49	73	18
LT Vol	18	17	39	6
Through Vol	39	16	17	6
RT Vol	39	16	17	6
Lane Flow Rate	104	53	79	20
Geometry Grp	1	1	1	1
Degree of Util (X)	0.116	0.06	0.09	0.022
Departure Headway (Hd)	4.015	4.08	4.097	4.112
Convergence, Y/N	Yes	Yes	Yes	Yes
Cap	884	868	866	859
Service Time	2.081	2.152	2.163	2.195
HCM Lane V/C Ratio	0.118	0.061	0.091	0.023
HCM Control Delay	7.6	7.4	7.6	7.3
HCM Lane LOS	A	A	A	A
HCM 95th-tile Q	0.4	0.2	0.3	0.1

Notes

~ : Volume Exceeds Capacity; $: Delay Exceeds 300 Seconds; Error : Computation Not Defined

HCM 2010 AWSC
3: Runyon Rd/East Drive & Northwest Drive (Internal Intersection) 8/6/2015

Intersection	
Intersection Delay, s/veh	8.6
Intersection LOS	A

Movement	EBL	EBT	EBR	WBL	WBT	WBR	NBL	NBT	NBR	SBL	SBT	SBR
Vol, veh/h	43	43	43	19	51	19	50	19	50	54	55	54
Peak Hour Factor	0.92	0.92	0.92	0.92	0.92	0.92	0.92	0.92	0.92	0.92	0.92	0.92
Heavy Vehicles, %	2	2	2	2	2	2	2	2	2	2	2	2
Mvmt Flow	47	47	47	21	55	21	54	21	54	59	60	59
Number of Lanes	0	1	0	0	1	0	0	1	0	0	1	0

Approach	EB	WB	NB	SB
Opposing Approach	WB	EB	SB	NB
Opposing Lanes	1	1	1	1
Conflicting Approach Left	SB	NB	EB	WB
Conflicting Lanes Left	1	1	1	1
Conflicting Approach Right	NB	SB	WB	EB
Conflicting Lanes Right	1	1	1	1
HCM Control Delay	8.7	8.5	8.5	8.8
HCM LOS	A	A	A	A

Lane	NBLn1	EBLn1	WBLn1	SBLn1
Vol Left, %	42%	33%	21%	33%
Vol Thru, %	16%	33%	57%	34%
Vol Right, %	42%	33%	21%	33%
Sign Control	Stop	Stop	Stop	Stop
Traffic Vol by Lane	119	129	89	163
LT Vol	19	43	51	55
Through Vol	50	43	19	54
RT Vol	50	43	19	54
Lane Flow Rate	129	140	97	177
Geometry Grp	1	1	1	1
Degree of Util (X)	0.163	0.18	0.127	0.222
Departure Headway (Hd)	4.533	4.62	4.721	4.513
Convergence, Y/N	Yes	Yes	Yes	Yes
Cap	790	774	757	794
Service Time	2.57	2.661	2.764	2.548
HCM Lane V/C Ratio	0.163	0.181	0.128	0.223
HCM Control Delay	8.5	8.7	8.5	8.8
HCM Lane LOS	A	A	A	A
HCM 95th-tile Q	0.6	0.7	0.4	0.8

Notes

~ : Volume Exceeds Capacity; $: Delay Exceeds 300 Seconds; Error : Computation Not Defined

Synchro^{TM} Output - 2017 Background Plus Site Traffic (Alternative 2)

HCM 2010 Signalized Intersection Summary
4278: Midway Rd & Lindbergh Dr

7/20/2015

Movement	EBL	EBT	EBR	WBL	WBT	WBR	NBL	NBT	NBR	SBL	SBT	SBR
Lane Configurations												
Volume (veh/h)	18	10	7	19	18	163	41	1127	50	217	2451	59
Number	3	8	18	7	4	14	1	6	16	5	2	12
Initial Q (Qb), veh	0	0	0	0	0	0	0	0	0	0	0	0
Ped-Bike Adj(A_pbT)	1.00		1.00	1.00		1.00	1.00		1.00	1.00		1.00
Parking Bus Adj	1.00	1.00	1.00	1.00	1.00	1.00	1.00	1.00	1.00	1.00	1.00	1.00
Adj Sat Flow veh/h/ln	186.3	186.3	190.0	186.3	193.7	186.3	186.3	186.3	190.0	186.3	186.3	190.0
Lanes	1	1	0	1	1	1	1	3	0	1	3	0
Cap, veh/h	289	153	120	320	308	252	149	3353	160	486	3652	87
Arrive On Green	0.04	0.16	0.15	0.04	0.16	0.16	0.09	1.00	1.00	0.08	0.67	0.66
Sat Flow, veh/h	1774	968	761	1774	1937	1583	1774	5291	252	1774	5435	130
Grp Volume(v), veh/h	26	0	25	29	24	199	63	826	404	286	2092	1046
Grp Sat Flow(s),veh/h/ln	1774	0	1729	1774	1937	1583	1774	1863	1818	1774	1863	1840
Q Serve(g_s), s	1.6	0.0	1.7	1.8	1.4	16.6	1.6	0.0	0.0	6.1	57.5	59.2
Cycle Q Clear(g_c), s	1.6	0.0	1.7	1.8	1.4	16.6	1.6	0.0	0.0	6.1	57.5	59.2
Prop In Lane	1.00		0.44	1.00		1.00	1.00		0.14	1.00		0.07
Lane Grp Cap(c), veh/h	289	0	273	320	308	252	149	2361	1152	486	2503	1236
V/C Ratio(X)	0.09	0.00	0.09	0.09	0.08	0.79	0.42	0.35	0.35	0.59	0.84	0.85
Avail Cap(c_a), veh/h	353	0	391	383	439	359	263	2361	1152	624	2503	1236
HCM Platoon Ratio	1.00	1.00	1.00	1.00	1.00	1.00	2.00	2.00	2.00	1.00	1.00	1.00
Upstream Filter(I)	1.00	0.00	1.00	1.00	1.00	1.00	1.00	1.00	1.00	1.00	1.00	1.00
Uniform Delay (d), s/veh	45.1	0.0	49.6	44.9	49.0	55.4	28.9	0.0	0.0	4.9	16.8	17.1
Incr Delay (d2), s/veh	0.1	0.0	0.1	0.1	0.1	7.6	1.9	0.4	0.8	1.1	3.5	7.2
Initial Q Delay(d3),s/veh	0.0	0.0	0.0	0.0	0.0	0.0	0.0	0.0	0.0	0.0	0.0	0.0
%ile Back of Q (50%), veh/ln	0.8	0.0	0.8	0.8	0.7	7.3	2.1	0.1	0.3	2.2	25.0	26.6
Lane Grp Delay (d), s/veh	45.2	0.0	49.7	45.0	49.1	62.9	30.8	0.4	0.8	6.0	20.3	24.4
Lane Grp LOS	D		D	D	D	E	C	A	A	A	C	C
Approach Vol, veh/h		51			252			1293			3424	
Approach Delay, s/veh		47.4			59.6			2.0			20.3	
Approach LOS		D			E			A			C	

Timer												
Assigned Phs	3	8		7	4		1	6		5	2	
Phs Duration (G+Y+Rc), s	8.0	24.6		8.2	24.8		9.1	89.8		14.4	95.0	
Change Period (Y+Rc), s	5.5	5.5		5.5	5.5		5.5	5.5		5.5	5.5	
Max Green Setting (Gmax), s	7.5	28.5		7.5	28.5		12.5	82.5		19.5	89.5	
Max Q Clear Time (g_c+I1), s	3.6	3.7		3.8	18.6		3.6	2.0		8.1	61.2	
Green Ext Time (p_c), s	0.0	1.0		0.0	0.7		0.1	65.1		0.8	26.1	

Intersection Summary												
HCM 2010 Ctrl Delay			17.9									
HCM 2010 LOS			B									

Notes

HCM 2010 Signalized Intersection Summary
4287: Beltway Dr & Beltline Rd

7/20/2015

Movement	EBU	EBT	EBR	WBL	WBT	NBL	NBR
Lane Configurations							
Volume (veh/h)	2	1811	19	108	1553	8	73
Number		6	16	5	2	7	14
Initial Q (Qb), veh		0	0	0	0	0	0
Ped-Bike Adj(A_pbT)			1.00	1.00		1.00	1.00
Parking Bus Adj		1.00	1.00	1.00	1.00	1.00	1.00
Adj Sat Flow veh/h/ln		186.3	190.0	186.3	186.3	186.3	186.3
Lanes		3	0	1	3	1	2
Cap, veh/h		4401	59	197	4981	111	198
Arrive On Green		0.80	0.79	0.07	0.89	0.06	0.06
Sat Flow, veh/h		5502	74	1774	5588	1774	3167
Grp Volume(v), veh/h		1264	628	138	1601	13	86
Grp Sat Flow(s),veh/h/ln		1863	1850	1774	1863	1774	1583
Q Serve(g_s), s		13.4	13.4	4.2	5.7	0.9	3.4
Cycle Q Clear(g_c), s		13.4	13.4	4.2	5.7	0.9	3.4
Prop In Lane			0.04	1.00		1.00	1.00
Lane Grp Cap(c), veh/h		2980	1480	197	4981	111	198
V/C Ratio(X)		0.42	0.42	0.70	0.32	0.12	0.43
Avail Cap(c_a), veh/h		2980	1480	280	4981	437	779
HCM Platoon Ratio		1.00	1.00	1.00	1.00	1.00	1.00
Upstream Filter(I)		1.00	1.00	1.00	1.00	1.00	1.00
Uniform Delay (d), s/veh		3.9	4.0	53.6	1.1	57.6	58.7
Incr Delay (d2), s/veh		0.4	0.9	4.5	0.2	0.5	1.5
Initial Q Delay(d3),s/veh		0.0	0.0	0.0	0.0	0.0	0.0
%ile Back of Q (50%), veh/ln		4.9	5.1	4.8	1.3	0.4	0.0
Lane Grp Delay (d), s/veh		4.4	4.8	58.1	1.2	58.0	60.2
Lane Grp LOS		A	A	E	A	E	E
Approach Vol, veh/h		1892			1739	99	
Approach Delay, s/veh		4.5			5.8	59.9	
Approach LOS		A			A	E	

Timer							
Assigned Phs		6		5	2		
Phs Duration (G+Y+Rc), s		107.0		11.9	118.9		
Change Period (Y+Rc), s		5.5		5.5	5.5		
Max Green Setting (Gmax), s		101.5		12.5	106.5		
Max Q Clear Time (g_c+I1), s		15.4		6.2	7.7		
Green Ext Time (p_c), s		46.1		0.2	49.0		

Intersection Summary							
HCM 2010 Ctrl Delay			6.6				
HCM 2010 LOS			A				

Notes

HCM 2010 Signalized Intersection Summary
4288: Midway Rd & Beltline Rd

7/20/2015

Movement	EBL	EBT	EBR	WBL	WBT	WBR	NBL	NBT	NBR	SBL	SBT	SBR
Lane Configurations												
Volume (veh/h)	158	1054	322	314	841	340	145	639	251	493	1761	149
Number	1	6	16	5	2	12	7	4	14	3	8	18
Initial Q (Qb), veh	0	0	0	0	0	0	0	0	0	0	0	0
Ped-Bike Adj(A_pbT)	1.00		1.00	1.00		1.00	1.00		1.00	1.00		1.00
Parking Bus Adj	1.00	1.00	1.00	1.00	1.00	1.00	1.00	1.00	1.00	1.00	1.00	1.00
Adj Sat Flow veh/h/ln	186.3	186.3	186.3	186.3	186.3	190.0	186.3	186.3	186.3	186.3	186.3	186.3
Lanes	2	3	1	2	3	0	2	3	1	2	3	1
Cap, veh/h	258	1502	426	559	1335	557	258	1886	534	538	2340	663
Arrive On Green	0.15	0.54	0.54	0.16	0.36	0.34	0.15	0.68	0.00	0.31	0.84	0.00
Sat Flow, veh/h	3442	5588	1583	3442	3749	1564	3442	5588	1583	3442	5588	1583
Grp Volume(v), veh/h	268	1109	408	320	908	388	167	702	0	524	2072	0
Grp Sat Flow(s),veh/h/ln	1721	1863	1583	1721	1863	1587	1721	1863	1583	1721	1863	1583
Q Serve(g_s), s	12.0	24.4	39.3	13.7	33.2	33.6	7.3	8.7	0.0	24.1	37.3	0.0
Cycle Q Clear(g_c), s	12.0	24.4	39.3	13.7	33.2	33.6	7.3	8.7	0.0	24.1	37.3	0.0
Prop In Lane	1.00		1.00	1.00		0.99	1.00		1.00	1.00		1.00
Lane Grp Cap(c), veh/h	258	1502	426	559	1327	565	258	1886	534	538	2340	663
V/C Ratio(X)	1.04	0.74	0.96	0.57	0.68	0.69	0.65	0.37	0.00	0.97	0.89	0.00
Avail Cap(c_a), veh/h	258	1502	426	559	1327	565	258	1886	534	538	2340	663
HCM Platoon Ratio	2.00	2.00	2.00	1.00	1.00	1.00	2.00	2.00	2.00	2.00	2.00	2.00
Upstream Filter(I)	1.00	1.00	1.00	1.00	1.00	1.00	1.00	1.00	0.00	1.00	1.00	0.00
Uniform Delay (d), s/veh	68.0	32.7	36.2	61.9	43.8	44.8	66.0	18.6	0.0	54.7	10.6	0.0
Incr Delay (d2), s/veh	66.3	3.3	34.5	4.2	2.9	6.6	11.9	0.6	0.0	33.0	5.4	0.0
Initial Q Delay(d3),s/veh	0.0	0.0	0.0	0.0	0.0	0.0	0.0	0.0	0.0	0.0	0.0	0.0
%ile Back of Q (50%), veh/ln	7.3	9.9	17.0	6.4	16.2	14.5	3.5	3.4	0.0	12.1	6.9	0.0
Lane Grp Delay (d), s/veh	134.3	36.0	70.6	66.1	46.7	51.4	77.9	19.2	0.0	87.7	16.0	0.0
Lane Grp LOS	F	D	E	E	D	D	E	B		F	B	
Approach Vol, veh/h		1785			1616			869			2596	
Approach Delay, s/veh		58.7			51.7			30.5			30.4	
Approach LOS		E			D			C			C	

Timer												
Assigned Phs	1	6		5	2		7	4		3	8	
Phs Duration (G+Y+Rc), s	15.0	46.0		29.0	60.0		15.0	57.0		28.0	70.0	
Change Period (Y+Rc), s	6.0	6.0		6.0	6.0		6.0	6.0		6.0	6.0	
Max Green Setting (Gmax), s	9.0	40.0		23.0	54.0		9.0	51.0		22.0	64.0	
Max Q Clear Time (g_c+I1), s	14.0	41.3		15.7	35.6		9.3	10.7		26.1	39.3	
Green Ext Time (p_c), s	0.0	0.0		0.8	6.1		0.0	3.5		0.0	16.2	

Intersection Summary												
HCM 2010 Ctrl Delay			42.8									
HCM 2010 LOS			D									

Notes

HCM 2010 Signalized Intersection Summary
4289: Midway Rd & Beltway Dr

7/20/2015

Movement	EBL	EBT	EBR	WBL	WBT	WBR	NBL	NBT	NBR	SBL	SBT	SBR
Lane Configurations												
Volume (veh/h)	56	38	133	34	9	49	57	952	30	43	2258	39
Number	3	8	18	7	4	14	1	6	16	5	2	12
Initial Q (Qb), veh	0	0	0	0	0	0	0	0	0	0	0	0
Ped-Bike Adj(A_pbT)	1.00		1.00	1.00		1.00	1.00		1.00	1.00		1.00
Parking Bus Adj	1.00	1.00	1.00	1.00	1.00	1.00	1.00	1.00	1.00	1.00	1.00	1.00
Adj Sat Flow veh/h/ln	186.3	193.7	186.3	186.3	193.7	190.0	186.3	186.3	186.3	186.3	193.7	186.3
Lanes	1	1	1	1	1	0	1	3	1	1	3	1
Cap, veh/h	294	282	230	291	29	173	208	3687	1045	502	3832	1044
Arrive On Green	0.08	0.15	0.15	0.05	0.12	0.11	0.09	1.00	1.00	0.09	1.00	1.00
Sat Flow, veh/h	1774	1937	1583	1774	243	1440	1774	5588	1583	1774	5812	1583
Grp Volume(v), veh/h	100	55	166	52	0	83	58	981	39	55	2688	48
Grp Sat Flow(s),veh/h/ln	1774	1937	1583	1774	0	1683	1774	1863	1583	1774	1937	1583
Q Serve(g_s), s	5.8	3.2	12.8	3.2	0.0	5.9	1.2	0.0	0.0	1.2	0.0	0.0
Cycle Q Clear(g_c), s	5.8	3.2	12.8	3.2	0.0	5.9	1.2	0.0	0.0	1.2	0.0	0.0
Prop In Lane	1.00		1.00	1.00		0.86	1.00		1.00	1.00		1.00
Lane Grp Cap(c), veh/h	294	282	230	291	0	202	208	3687	1045	502	3832	1044
V/C Ratio(X)	0.34	0.20	0.72	0.18	0.00	0.41	0.28	0.27	0.04	0.11	0.70	0.05
Avail Cap(c_a), veh/h	321	639	522	362	0	555	264	3687	1045	559	3832	1044
HCM Platoon Ratio	1.00	1.00	1.00	1.00	1.00	1.00	2.00	2.00	2.00	2.00	2.00	2.00
Upstream Filter(I)	1.00	1.00	1.00	1.00	0.00	1.00	1.00	1.00	1.00	1.00	1.00	1.00
Uniform Delay (d), s/veh	39.5	47.9	52.0	44.7	0.0	52.5	5.4	0.0	0.0	5.4	0.0	0.0
Incr Delay (d2), s/veh	0.7	0.3	4.2	0.3	0.0	1.3	0.7	0.2	0.1	0.1	1.1	0.1
Initial Q Delay(d3),s/veh	0.0	0.0	0.0	0.0	0.0	0.0	0.0	0.0	0.0	0.0	0.0	0.0
%ile Back of Q (50%), veh/ln	2.7	1.6	5.5	1.5	0.0	2.7	0.5	0.1	0.0	0.4	0.4	0.0
Lane Grp Delay (d), s/veh	40.2	48.2	56.2	45.0	0.0	53.8	6.1	0.2	0.1	5.5	1.1	0.1
Lane Grp LOS	D	D	E	D		D	A	A	A	A	A	A
Approach Vol, veh/h		321			135			1078			2791	
Approach Delay, s/veh		49.8			50.4			0.5			1.2	
Approach LOS		D			D			A			A	

Timer												
Assigned Phs	3	8		7	4		1	6		5	2	
Phs Duration (G+Y+Rc), s	13.1	21.5		9.9	18.3		9.0	87.1		8.9	87.0	
Change Period (Y+Rc), s	5.5	5.5		5.5	5.5		5.5	5.5		5.5	5.5	
Max Green Setting (Gmax), s	9.5	39.5		9.5	39.5		7.5	81.5		7.5	81.5	
Max Q Clear Time (g_c+I1), s	7.8	14.8		5.2	7.9		3.2	2.0		3.2	2.0	
Green Ext Time (p_c), s	0.0	1.3		0.0	1.3		0.0	55.9		0.0	55.9	

Intersection Summary												
HCM 2010 Ctrl Delay			6.1									
HCM 2010 LOS			A									

Notes

HCM 2010 Signalized Intersection Summary
4290: Midway Rd & Proton Dr

7/20/2015

Movement	EBL	EBT	EBR	WBL	WBT	WBR	NBL	NBT	NBR	SBL	SBT	SBR
Lane Configurations												
Volume (veh/h)	73	25	162	3	7	29	35	1012	11	214	2045	77
Number	3	8	18	7	4	14	1	6	16	5	2	12
Initial Q (Qb), veh	0	0	0	0	0	0	0	0	0	0	0	0
Ped-Bike Adj(A_pbT)	1.00		1.00	1.00		1.00	1.00		1.00	1.00		1.00
Parking Bus Adj	1.00	1.00	1.00	1.00	1.00	1.00	1.00	1.00	1.00	1.00	1.00	1.00
Adj Sat Flow veh/h/ln	186.3	193.7	190.0	190.0	186.3	186.3	186.3	186.3	190.0	186.3	186.3	190.0
Lanes	1	1	0	0	1	1	1	3	0	1	3	0
Cap, veh/h	252	82	248	55	111	147	201	3597	54	477	3729	145
Arrive On Green	0.08	0.19	0.19	0.09	0.09	0.09	0.04	0.65	0.64	0.17	1.00	1.00
Sat Flow, veh/h	1774	424	1286	212	1195	1583	1774	5492	82	1774	5345	207
Grp Volume(v), veh/h	92	0	266	14	0	32	36	771	383	285	1775	881
Grp Sat Flow(s),veh/h/ln	1774	0	1710	1407	0	1583	1774	1863	1848	1774	1863	1826
Q Serve(g_s), s	5.9	0.0	19.6	0.0	0.0	2.5	0.8	11.9	11.9	5.8	0.0	0.0
Cycle Q Clear(g_c), s	5.9	0.0	19.6	6.4	0.0	2.5	0.8	11.9	11.9	5.8	0.0	0.0
Prop In Lane	1.00		0.75	0.29		1.00	1.00		0.04	1.00		0.11
Lane Grp Cap(c), veh/h	252	0	330	166	0	147	201	2440	1210	477	2599	1274
V/C Ratio(X)	0.37	0.00	0.81	0.08	0.00	0.22	0.18	0.32	0.32	0.60	0.68	0.69
Avail Cap(c_a), veh/h	316	0	623	376	0	360	276	2440	1210	624	2599	1274
HCM Platoon Ratio	1.00	1.00	1.00	1.00	1.00	1.00	1.00	1.00	1.00	2.00	2.00	2.00
Upstream Filter(I)	1.00	0.00	1.00	1.00	0.00	1.00	1.00	1.00	1.00	1.00	1.00	1.00
Uniform Delay (d), s/veh	46.4	0.0	50.9	54.7	0.0	55.4	6.2	9.9	9.9	5.8	0.0	0.0
Incr Delay (d2), s/veh	0.9	0.0	4.7	0.2	0.0	0.7	0.4	0.3	0.7	1.2	1.5	3.1
Initial Q Delay(d3),s/veh	0.0	0.0	0.0	0.0	0.0	0.0	0.0	0.0	0.0	0.0	0.0	0.0
%ile Back of Q (50%), veh/ln	2.7	0.0	9.1	0.4	0.0	0.0	0.3	5.0	5.1	1.8	0.5	1.1
Lane Grp Delay (d), s/veh	47.3	0.0	55.5	54.9	0.0	56.1	6.6	10.2	10.6	7.0	1.5	3.1
Lane Grp LOS	D		E	D		E	A	B	B	A	A	A
Approach Vol, veh/h		358			46			1190			2941	
Approach Delay, s/veh		53.4			55.7			10.3			2.5	
Approach LOS		D			E			B			A	

Timer												
Assigned Phs	3	8			4		1	6		5	2	
Phs Duration (G+Y+Rc), s	13.2	28.4			15.2		8.4	89.4		14.1	95.0	
Change Period (Y+Rc), s	5.5	5.5			5.5		5.5	5.5		5.5	5.5	
Max Green Setting (Gmax), s	12.5	45.5			27.5		8.5	78.5		19.5	89.5	
Max Q Clear Time (g_c+I1), s	7.9	21.6			8.4		2.8	13.9		7.8	2.0	
Green Ext Time (p_c), s	0.1	1.3			1.3		0.0	45.1		0.8	54.6	

Intersection Summary	
HCM 2010 Ctrl Delay	9.1
HCM 2010 LOS	A

Notes

HCM 2010 Signalized Intersection Summary
4295: Runyon Rd & Beltline Rd

7/20/2015

Movement	EBL	EBT	EBR	WBL	WBT	WBR	NBL	NBT	NBR	SBL	SBT	SBR
Lane Configurations												
Volume (veh/h)	8	1411	15	35	1097	0	42	0	35	9	1	2
Number	1	6	16	5	2	12	7	4	14	3	8	18
Initial Q (Qb), veh	0	0	0	0	0	0	0	0	0	0	0	0
Ped-Bike Adj(A_pbT)	1.00		1.00	1.00		1.00	1.00		1.00	1.00		1.00
Parking Bus Adj	1.00	1.00	1.00	1.00	1.00	1.00	1.00	1.00	1.00	1.00	1.00	1.00
Adj Sat Flow veh/h/ln	186.3	186.3	186.3	186.3	186.3	190.0	186.3	186.3	190.0	186.3	186.3	190.0
Lanes	1	3	1	1	3	0	2	1	0	1	1	0
Cap, veh/h	443	4105	1163	400	4185	0	463	0	133	170	68	51
Arrive On Green	0.07	1.00	1.00	0.10	1.00	0.00	0.05	0.00	0.07	0.03	0.07	0.06
Sat Flow, veh/h	1774	5588	1583	1774	5588	0	3442	0	1583	1774	990	742
Grp Volume(v), veh/h	18	1485	27	66	1261	0	63	0	74	16	0	7
Grp Sat Flow(s),veh/h/ln	1774	1863	1583	1774	1863	0	1721	0	1583	1774	0	1732
Q Serve(g_s), s	0.3	0.0	0.0	0.9	0.0	0.0	2.0	0.0	5.5	1.0	0.0	0.5
Cycle Q Clear(g_c), s	0.3	0.0	0.0	0.9	0.0	0.0	2.0	0.0	5.5	1.0	0.0	0.5
Prop In Lane	1.00		1.00	1.00		0.00	1.00		1.00	1.00		0.43
Lane Grp Cap(c), veh/h	443	4105	1163	400	4185	0	463	0	133	170	0	119
V/C Ratio(X)	0.04	0.36	0.02	0.17	0.30	0.00	0.14	0.00	0.56	0.09	0.00	0.06
Avail Cap(c_a), veh/h	525	4105	1163	457	4185	0	575	0	452	298	0	537
HCM Platoon Ratio	2.00	2.00	2.00	2.00	2.00	2.00	1.00	1.00	1.00	1.00	1.00	1.00
Upstream Filter(I)	0.88	0.88	0.88	1.00	1.00	0.00	1.00	0.00	1.00	1.00	0.00	1.00
Uniform Delay (d), s/veh	3.2	0.0	0.0	2.3	0.0	0.0	46.2	0.0	54.7	49.8	0.0	53.7
Incr Delay (d2), s/veh	0.0	0.2	0.0	0.2	0.2	0.0	0.1	0.0	3.6	0.2	0.0	0.2
Initial Q Delay(d3),s/veh	0.0	0.0	0.0	0.0	0.0	0.0	0.0	0.0	0.0	0.0	0.0	0.0
%ile Back of Q (50%), veh/ln	0.1	0.1	0.0	0.3	0.1	0.0	0.9	0.0	2.4	0.5	0.0	0.2
Lane Grp Delay (d), s/veh	3.2	0.2	0.0	2.5	0.2	0.0	46.3	0.0	58.3	50.1	0.0	53.9
Lane Grp LOS	A	A	A	A	A		D		E	D		D
Approach Vol, veh/h		1530			1327			137			23	
Approach Delay, s/veh		0.3			0.3			52.8			51.2	
Approach LOS		A			A			D			D	

Timer												
Assigned Phs	1	6		5	2		7	4		3	8	
Phs Duration (G+Y+Rc), s	7.3	93.0		9.1	94.7		9.0	13.3		7.2	11.4	
Change Period (Y+Rc), s	5.5	5.5		5.5	5.5		5.5	5.5		5.5	5.5	
Max Green Setting (Gmax), s	7.5	87.5		7.5	87.5		7.5	32.5		10.5	35.5	
Max Q Clear Time (g_c+I1), s	2.3	2.0		2.9	2.0		4.0	7.5		3.0	2.5	
Green Ext Time (p_c), s	0.0	29.7		0.1	29.7		0.0	0.3		0.0	0.3	

Intersection Summary	
HCM 2010 Ctrl Delay	3.0
HCM 2010 LOS	A

Notes

Lane Group	EBL	EBT	EBR	WBL	WBT	WBR	NBL	NBT	NBR	SBL	SBT	SBR
Lane Configurations												
Volume (vph)	146	1334	44	77	1002	48	25	52	47	27	69	123
Ideal Flow (vphpl)	1900	1900	1900	1900	1900	1900	1900	1900	1900	1900	1900	1900
Storage Length (ft)	150		0	200		0	100		140	100		120
Storage Lanes	1		0	1		0	1		1	1		0
Taper Length (ft)	25			25			25			25		
Lane Util. Factor	1.00	0.91	0.91	1.00	0.91	0.91	1.00	1.00	1.00	1.00	1.00	1.00
Frt		0.993			0.993				0.850			0.850
Flt Protected	0.950			0.950			0.950			0.950		
Satd. Flow (prot)	1770	5050	0	1770	5050	0	1770	1863	1583	1770	1863	1583
Flt Permitted	0.159			0.150			0.542			0.697		
Satd. Flow (perm)	296	5050	0	279	5050	0	1010	1863	1583	1298	1863	1583
Right Turn on Red			Yes			Yes			Yes			Yes
Satd. Flow (RTOR)		6			7				170			211
Link Speed (mph)		40			40			30			30	
Link Distance (ft)		907			950			997			322	
Travel Time (s)		15.5			16.2			22.7			7.3	
Peak Hour Factor	0.59	0.94	0.68	0.90	0.89	0.86	0.89	0.94	0.90	0.73	0.91	0.68
Adj. Flow (vph)	247	1419	65	86	1126	56	28	55	52	37	76	181
Shared Lane Traffic (%)												
Lane Group Flow (vph)	247	1484	0	86	1182	0	28	55	52	37	76	181
Enter Blocked Intersection	No	No	No	No	No	No	No	No	No	No	No	No
Lane Alignment	Left	Left	Right	Left	Left	Right	Left	Left	Right	Left	Left	Right
Median Width(ft)		12			12			12			12	
Link Offset(ft)		0			0			0			0	
Crosswalk Width(ft)		16			16			16			16	
Two way Left Turn Lane												
Headway Factor	1.00	1.00	1.00	1.00	1.00	1.00	1.00	1.00	1.00	1.00	1.00	1.00
Turning Speed (mph)	15		9	15		9	15		9	15		9
Number of Detectors	1	1		1	1		1	1	1	1	1	1
Detector Template												
Leading Detector (ft)	50	50		50	50		50	50	50	50	50	50
Trailing Detector (ft)	0	0		0	0		0	0	0	0	0	0
Detector 1 Position(ft)	0	0		0	0		0	0	0	0	0	0
Detector 1 Size(ft)	50	50		50	50		50	50	50	50	50	50
Detector 1 Type	Cl+Ex	Cl+Ex		Cl+Ex	Cl+Ex		Cl+Ex	Cl+Ex	Cl+Ex	Cl+Ex	Cl+Ex	Cl+Ex
Detector 1 Channel												
Detector 1 Extend (s)	0.0	0.0		0.0	0.0		0.0	0.0	0.0	0.0	0.0	0.0
Detector 1 Queue (s)	0.0	0.0		0.0	0.0		0.0	0.0	0.0	0.0	0.0	0.0
Detector 1 Delay (s)	0.0	0.0		0.0	0.0		0.0	0.0	0.0	0.0	0.0	0.0
Turn Type	pm+pt	NA		pm+pt	NA		custom	NA	Perm	pm+pt	NA	custom
Protected Phases	1	6 14		13	2 10		15	4 12		11	8 16	
Permitted Phases	6 14			2 10			4		4 12	8 16		8
Detector Phase	1	6 14		13	2 10		15	4 12	4 12	11	8 16	8
Switch Phase												
Minimum Initial (s)	4.0			4.0			4.0			4.0		4.0
Minimum Split (s)	13.0			13.0			13.0			13.0		16.0
Total Split (s)	20.0			18.0			13.0			13.0		20.0
Total Split (%)	12.5%			11.3%			8.1%			8.1%		12.5%

Lane Group	ø2	ø4	ø6	ø10	ø12	ø14	ø16
Lane Configurations							
Volume (vph)							
Ideal Flow (vphpl)							
Storage Length (ft)							
Storage Lanes							
Taper Length (ft)							
Lane Util. Factor							
Frt							
Flt Protected							
Satd. Flow (prot)							
Flt Permitted							
Satd. Flow (perm)							
Right Turn on Red							
Satd. Flow (RTOR)							
Link Speed (mph)							
Link Distance (ft)							
Travel Time (s)							
Peak Hour Factor							
Adj. Flow (vph)							
Shared Lane Traffic (%)							
Lane Group Flow (vph)							
Enter Blocked Intersection							
Lane Alignment							
Median Width(ft)							
Link Offset(ft)							
Crosswalk Width(ft)							
Two way Left Turn Lane							
Headway Factor							
Turning Speed (mph)							
Number of Detectors							
Detector Template							
Leading Detector (ft)							
Trailing Detector (ft)							
Detector 1 Position(ft)							
Detector 1 Size(ft)							
Detector 1 Type							
Detector 1 Channel							
Detector 1 Extend (s)							
Detector 1 Queue (s)							
Detector 1 Delay (s)							
Turn Type							
Protected Phases	2	4	6	10	12	14	16
Permitted Phases							
Detector Phase							
Switch Phase							
Minimum Initial (s)	4.0	4.0	4.0	4.0	4.0	4.0	4.0
Minimum Split (s)	29.5	16.0	24.5	22.0	22.0	22.0	22.0
Total Split (s)	35.0	20.0	55.0	53.0	19.0	35.0	19.0
Total Split (%)	22%	13%	34%	33%	12%	22%	12%

Lane Group	EBL	EBT	EBR	WBL	WBT	WBR	NBL	NBT	NBR	SBL	SBT	SBR
Maximum Green (s)	14.5			12.5			7.5			7.5		14.5
Yellow Time (s)	3.5			3.5			3.5			3.5		3.5
All-Red Time (s)	2.0			2.0			2.0			2.0		2.0
Lost Time Adjust (s)	-2.5			-2.5			-3.0			-2.5		-2.5
Total Lost Time (s)	3.0			3.0			2.5			3.0		3.0
Lead/Lag	Lead			Lead			Lead			Lead		
Lead-Lag Optimize?	Yes			Yes			Yes			Yes		
Vehicle Extension (s)	3.0			3.0			3.0			3.0		3.0
Recall Mode	None			None			None			None		None
Walk Time (s)												5.0
Flash Dont Walk (s)												2.0
Pedestrian Calls (#/hr)												0
Act Effct Green (s)	95.7	95.7		89.4	89.4		20.7	29.8	29.8	38.1	32.3	10.8
Actuated g/C Ratio	0.60	0.60		0.56	0.56		0.13	0.19	0.19	0.24	0.20	0.07
v/c Ratio	0.77	0.49		0.35	0.42		0.16	0.16	0.12	0.11	0.20	0.60
Control Delay	37.4	10.0		19.0	11.9		33.0	29.4	0.6	23.7	29.1	12.7
Queue Delay	0.0	0.0		0.0	0.0		0.0	0.0	0.0	0.0	0.0	0.0
Total Delay	37.4	10.0		19.0	11.9		33.0	29.4	0.6	23.7	29.1	12.7
LOS	D	A		B	B		C	C	A	C	C	B
Approach Delay		13.9			12.4			19.1			18.3	
Approach LOS		B			B			B			B	

Intersection Summary	
Area Type:	Other
Cycle Length: 160	
Actuated Cycle Length: 160	
Offset: 75 (47%), Referenced to phase 2:WBTL and 6:EBTL, Start of 1st Green	
Natural Cycle: 130	
Control Type: Actuated-Coordinated	
Maximum v/c Ratio: 0.77	
Intersection Signal Delay: 13.9	Intersection LOS: B
Intersection Capacity Utilization 49.2%	ICU Level of Service A
Analysis Period (min) 15	

Splits and Phases: 4296: Surveyor Blvd & Beltline Rd

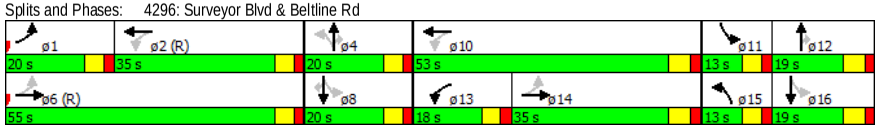

Lane Group	ø2	ø4	ø6	ø10	ø12	ø14	ø16
Maximum Green (s)	29.5	14.5	49.5	47.0	13.0	29.0	13.0
Yellow Time (s)	3.5	3.5	3.5	4.0	4.0	4.0	4.0
All-Red Time (s)	2.0	2.0	2.0	2.0	2.0	2.0	2.0
Lost Time Adjust (s)							
Total Lost Time (s)							
Lead/Lag	Lag				Lag	Lag	Lag
Lead-Lag Optimize?	Yes						
Vehicle Extension (s)	3.0	3.0	3.0	3.0	3.0	3.0	3.0
Recall Mode	C-Max	Min	C-Max	Max	Min	None	Max
Walk Time (s)	5.0	5.0	5.0	5.0	5.0	5.0	5.0
Flash Dont Walk (s)	19.0	24.0	14.0	11.0	11.0	11.0	11.0
Pedestrian Calls (#/hr)	0	0	0	0	0	0	0
Act Effct Green (s)							
Actuated g/C Ratio							
v/c Ratio							
Control Delay							
Queue Delay							
Total Delay							
LOS							
Approach Delay							
Approach LOS							

Intersection Summary

HCM 2010 TWSC
2: Northeast Drive & Beltline Rd

7/20/2015

Intersection	
Intersection Delay, s/veh	0.8

Movement	EBT	EBR	WBL	WBT	NBL	NBR
Vol, veh/h	1624	1	0	0	0	56
Conflicting Peds, #/hr	0	0	0	0	0	0
Sign Control	Free	Free	Free	Free	Stop	Stop
RT Channelized	-	None	-	None	-	None
Storage Length	-	140	-	-	-	0
Veh in Median Storage, #	0	-	-	0	0	-
Grade, %	0	-	-	0	0	-
Peak Hour Factor	92	92	92	92	92	92
Heavy Vehicles, %	2	2	2	2	2	2
Mvmt Flow	1765	1	0	0	0	61

Major/Minor	Major1		Major2		Minor1	
Conflicting Flow All	0	0	1765	0	1765	883
Stage 1	-	-	-	-	1765	-
Stage 2	-	-	-	-	0	-
Follow-up Headway	-	-	3.12	-	3.82	3.92
Pot Capacity-1 Maneuver	-	-	164	-	125	248
Stage 1	-	-	-	-	80	-
Stage 2	-	-	-	-	-	-
Time blocked-Platoon, %	-	-		-		
Mov Capacity-1 Maneuver	-	-	164	-	125	248
Mov Capacity-2 Maneuver	-	-	-	-	125	-
Stage 1	-	-	-	-	80	-
Stage 2	-	-	-	-	-	-

Approach	EB	WB	NB
HCM Control Delay, s	0	0	24.2
HCM LOS			C

Minor Lane / Major Mvmt	NBLn1	EBT	EBR	WBL	WBT
Capacity (veh/h)	248	-	-	164	-
HCM Lane V/C Ratio	0.245	-	-	-	-
HCM Control Delay (s)	24.2	-	-	0	-
HCM Lane LOS	C			A	
HCM 95th %tile Q(veh)	0.938	-	-	0	-

Notes

~ : Volume Exceeds Capacity; $: Delay Exceeds 300 Seconds; Error : Computation Not Defined

HCM 2010 TWSC
4: Midway Rd & East Drive

7/20/2015

Intersection	
Intersection Delay, s/veh	2.5

Movement	EBL	EBR	NBL	NBT	SBT	SBR
Vol, veh/h	5	29	24	1044	2421	7
Conflicting Peds, #/hr	0	0	0	0	0	0
Sign Control	Stop	Stop	Free	Free	Free	Free
RT Channelized	-	None	-	None	-	None
Storage Length	0	-	125	-	-	-
Veh in Median Storage, #	0	-	-	0	0	-
Grade, %	0	-	-	0	0	-
Peak Hour Factor	92	92	92	92	92	92
Heavy Vehicles, %	2	2	2	2	2	2
Mvmt Flow	5	32	26	1135	2632	8

Major/Minor	Minor2		Major1		Major2	
Conflicting Flow All	3198	1320	2639	0	-	0
Stage 1	2692	-	-	-	-	-
Stage 2	506	-	-	-	-	-
Follow-up Headway	3.82	3.92	3.12	-	-	-
Pot Capacity-1 Maneuver	20	126	59	-	-	-
Stage 1	20	-	-	-	-	-
Stage 2	521	-	-	-	-	-
Time blocked-Platoon, %				-	-	-
Mov Capacity-1 Maneuver	11	126	59	-	-	-
Mov Capacity-2 Maneuver	11	-	-	-	-	-
Stage 1	20	-	-	-	-	-
Stage 2	291	-	-	-	-	-

Approach	EB	NB	SB
HCM Control Delay, s	183.8	2.4	0
HCM LOS	F		

Minor Lane / Major Mvmt	NBL	NBT	EBLn1	SBU	SBT	SBR
Capacity (veh/h)	59	-	50	-	-	-
HCM Lane V/C Ratio	0.442	-	0.739	-	-	-
HCM Control Delay (s)	107.518	-	183.8	-	-	-
HCM Lane LOS	F		F			
HCM 95th %tile Q(veh)	1.686	-	2.996	-	-	-

Notes

~ : Volume Exceeds Capacity; $: Delay Exceeds 300 Seconds; Error : Computation Not Defined

Intersection	
Intersection Delay, s/veh	0.8

Movement	EBL	EBT	EBR	WBL	WBT	WBR	NBL	NBT	NBR	SBL	SBT	SBR
Vol, veh/h	0	0	1	4	0	9	6	1025	35	89	2389	0
Conflicting Peds, #/hr	0	0	0	0	0	0	0	0	0	0	0	0
Sign Control	Stop	Stop	Stop	Stop	Stop	Stop	Free	Free	Free	Free	Free	Free
RT Channelized	-	-	None	-	-	None	-	-	None	-	-	None
Storage Length	-	-	-	-	-	0	130	-	-	125	-	-
Veh in Median Storage, #	-	0	-	-	0	-	-	0	-	-	0	-
Grade, %	-	0	-	-	0	-	-	0	-	-	0	-
Peak Hour Factor	92	92	92	92	92	92	92	92	92	92	92	92
Heavy Vehicles, %	2	2	2	2	2	2	2	2	2	2	2	2
Mvmt Flow	0	0	1	4	0	10	7	1114	38	97	2597	0

Major/Minor	Minor2			Minor1			Major1			Major2		
Conflicting Flow All	3249	3955	1298	2378	3936	576	2597	0	0	1152	0	0
Stage 1	2790	2790	-	1146	1146	-	-	-	-	-	-	-
Stage 2	459	1165	-	1232	2790	-	-	-	-	-	-	-
Follow-up Headway	3.82	4.02	3.92	3.82	4.02	3.92	3.12	-	-	3.12	-	-
Pot Capacity-1 Maneuver	10	3	131	37	3	394	62	-	-	330	-	-
Stage 1	10	40	-	157	272	-	-	-	-	-	-	-
Stage 2	504	267	-	168	40	-	-	-	-	-	-	-
Time blocked-Platoon, %								-	-		-	-
Mov Capacity-1 Maneuver	7	2	131	26	2	394	62	-	-	330	-	-
Mov Capacity-2 Maneuver	7	2	-	26	2	-	-	-	-	-	-	-
Stage 1	9	28	-	139	241	-	-	-	-	-	-	-
Stage 2	436	237	-	118	28	-	-	-	-	-	-	-

Approach	EB	WB	NB	SB
HCM Control Delay, s	32.7	63.6	0.4	0.7
HCM LOS	D	F		

Minor Lane / Major Mvmt	NBL	NBT	NBR	EBLn1	WBLn1	WBLn2	SBL	SBT	SBR
Capacity (veh/h)	62	-	-	131	43	394	330	-	-
HCM Lane V/C Ratio	0.105	-	-	0.008	0.177	0.017	0.293	-	-
HCM Control Delay (s)	69.778	-	-	32.7	105.9	14.3	20.371	-	-
HCM Lane LOS	F			D	F	B	C		
HCM 95th %tile Q(veh)	0.336	-	-	0.025	0.571	0.05	1.195	-	-

Notes

~ : Volume Exceeds Capacity; $: Delay Exceeds 300 Seconds; Error : Computation Not Defined

Intersection	
Intersection Delay, s/veh	2.5

Movement	EBL	EBT	WBT	WBR	SBL	SBR
Vol, veh/h	1	47	13	6	23	2
Conflicting Peds, #/hr	0	0	0	0	0	0
Sign Control	Free	Free	Free	Free	Stop	Stop
RT Channelized	-	None	-	None	-	None
Storage Length	-	-	-	-	0	-
Veh in Median Storage, #	-	0	0	-	0	-
Grade, %	-	0	0	-	0	-
Peak Hour Factor	92	92	92	92	92	92
Heavy Vehicles, %	2	2	2	2	2	2
Mvmt Flow	1	51	14	7	25	2

Major/Minor	Major1		Major2		Minor2	
Conflicting Flow All	21	0	-	0	70	17
Stage 1	-	-	-	-	17	-
Stage 2	-	-	-	-	53	-
Follow-up Headway	2.218	-	-	-	3.518	3.318
Pot Capacity-1 Maneuver	1595	-	-	-	934	1062
Stage 1	-	-	-	-	1006	-
Stage 2	-	-	-	-	970	-
Time blocked-Platoon, %		-	-	-		
Mov Capacity-1 Maneuver	1595	-	-	-	933	1062
Mov Capacity-2 Maneuver	-	-	-	-	933	-
Stage 1	-	-	-	-	1006	-
Stage 2	-	-	-	-	969	-

Approach	EB	WB	SB
HCM Control Delay, s	0.2	0	8.9
HCM LOS			A

Minor Lane / Major Mvmt	EBL	EBT	WBT	WBR	SBLn1
Capacity (veh/h)	1595	-	-	-	942
HCM Lane V/C Ratio	0.001	-	-	-	0.029
HCM Control Delay (s)	7.259	0	-	-	8.9
HCM Lane LOS	A	A			A
HCM 95th %tile Q(veh)	0.002	-	-	-	0.089

Notes

~ : Volume Exceeds Capacity; $: Delay Exceeds 300 Seconds; Error : Computation Not Defined

Intersection	
Intersection Delay, s/veh	4.6

Movement	EBL	EBT	WBT	WBR	SBL	SBR
Vol, veh/h	1	17	7	8	30	5
Conflicting Peds, #/hr	0	0	0	0	0	0
Sign Control	Free	Free	Free	Free	Stop	Stop
RT Channelized	-	None	-	None	-	None
Storage Length	-	-	-	-	0	-
Veh in Median Storage, #	-	0	0	-	0	-
Grade, %	-	0	0	-	0	-
Peak Hour Factor	92	92	92	92	92	92
Heavy Vehicles, %	2	2	2	2	2	2
Mvmt Flow	1	18	8	9	33	5

Major/Minor	Major1		Major2		Minor2	
Conflicting Flow All	16	0	-	0	33	12
Stage 1	-	-	-	-	12	-
Stage 2	-	-	-	-	21	-
Follow-up Headway	2.218	-	-	-	3.518	3.318
Pot Capacity-1 Maneuver	1602	-	-	-	980	1069
Stage 1	-	-	-	-	1011	-
Stage 2	-	-	-	-	1002	-
Time blocked-Platoon, %		-	-	-		
Mov Capacity-1 Maneuver	1602	-	-	-	979	1069
Mov Capacity-2 Maneuver	-	-	-	-	979	-
Stage 1	-	-	-	-	1011	-
Stage 2	-	-	-	-	1001	-

Approach	EB	WB	SB
HCM Control Delay, s	0.4	0	8.8
HCM LOS			A

Minor Lane / Major Mvmt	EBL	EBT	WBT	WBR	SBLn1
Capacity (veh/h)	1602	-	-	-	991
HCM Lane V/C Ratio	0.001	-	-	-	0.038
HCM Control Delay (s)	7.249	0	-	-	8.8
HCM Lane LOS	A	A			A
HCM 95th %tile Q(veh)	0.002	-	-	-	0.12

Notes

~ : Volume Exceeds Capacity; $: Delay Exceeds 300 Seconds; Error : Computation Not Defined

Intersection	
Intersection Delay, s/veh	5.4

Movement	EBL	EBT	WBT	WBR	SBL	SBR
Vol, veh/h	1	2	7	4	16	5
Conflicting Peds, #/hr	0	0	0	0	0	0
Sign Control	Free	Free	Free	Free	Stop	Stop
RT Channelized	-	None	-	None	-	None
Storage Length	-	-	-	-	0	-
Veh in Median Storage, #	-	0	0	-	0	-
Grade, %	-	0	0	-	0	-
Peak Hour Factor	92	92	92	92	92	92
Heavy Vehicles, %	2	2	2	2	2	2
Mvmt Flow	1	2	8	4	17	5

Major/Minor	Major1		Major2		Minor2	
Conflicting Flow All	12	0	-	0	14	10
Stage 1	-	-	-	-	10	-
Stage 2	-	-	-	-	4	-
Follow-up Headway	2.218	-	-	-	3.518	3.318
Pot Capacity-1 Maneuver	1607	-	-	-	1005	1071
Stage 1	-	-	-	-	1013	-
Stage 2	-	-	-	-	1019	-
Time blocked-Platoon, %		-	-	-		
Mov Capacity-1 Maneuver	1607	-	-	-	1004	1071
Mov Capacity-2 Maneuver	-	-	-	-	1004	-
Stage 1	-	-	-	-	1013	-
Stage 2	-	-	-	-	1018	-

Approach	EB	WB	SB
HCM Control Delay, s	2.4	0	8.6
HCM LOS			A

Minor Lane / Major Mvmt	EBL	EBT	WBT	WBR	SBLn1
Capacity (veh/h)	1607	-	-	-	1019
HCM Lane V/C Ratio	0.001	-	-	-	0.022
HCM Control Delay (s)	7.242	0	-	-	8.6
HCM Lane LOS	A	A			A
HCM 95th %tile Q(veh)	0.002	-	-	-	0.069

Notes

~ : Volume Exceeds Capacity; $: Delay Exceeds 300 Seconds; Error : Computation Not Defined

Two Way Analysis cannot be performed on an All Way Stop Intersection.

Intersection	
Intersection Delay, s/veh	0.8

Movement	EBL	EBT	EBR	WBL	WBT	WBR	NBL	NBT	NBR	SBL	SBT	SBR
Vol, veh/h	15	1567	3	20	1059	3	0	0	58	0	0	2
Conflicting Peds, #/hr	0	0	0	0	0	0	0	0	0	0	0	0
Sign Control	Free	Free	Free	Free	Free	Free	Stop	Stop	Stop	Stop	Stop	Stop
RT Channelized	-	-	None	-	-	None	-	-	None	-	-	None
Storage Length	160	-	160	175	-	-	-	-	0	-	-	0
Veh in Median Storage, #	-	0	-	-	0	-	-	0	-	-	0	-
Grade, %	-	0	-	-	0	-	-	0	-	-	0	-
Peak Hour Factor	92	92	92	92	92	92	92	92	92	92	92	92
Heavy Vehicles, %	2	2	2	2	2	2	2	2	2	2	2	2
Mvmt Flow	16	1703	3	22	1151	3	0	0	63	0	0	2

Major/Minor	Major1			Major2			Minor1			Minor2		
Conflicting Flow All	1154	0	0	1703	0	0	2240	2934	852	1910	2932	577
Stage 1	-	-	-	-	-	-	1736	1736	-	1196	1196	-
Stage 2	-	-	-	-	-	-	504	1198	-	714	1736	-
Follow-up Headway	3.12	-	-	3.12	-	-	3.82	4.02	3.92	3.82	4.02	3.92
Pot Capacity-1 Maneuver	330	-	-	177	-	-	45	15	260	72	15	394
Stage 1	-	-	-	-	-	-	60	140	-	145	258	-
Stage 2	-	-	-	-	-	-	474	257	-	353	140	-
Time blocked-Platoon, %		-	-		-	-						
Mov Capacity-1 Maneuver	330	-	-	177	-	-	39	12	260	48	12	394
Mov Capacity-2 Maneuver	-	-	-	-	-	-	39	12	-	48	12	-
Stage 1	-	-	-	-	-	-	57	133	-	138	226	-
Stage 2	-	-	-	-	-	-	413	225	-	254	133	-

Approach	EB	WB	NB	SB
HCM Control Delay, s	0.2	0.5	23.2	14.2
HCM LOS			C	B

Minor Lane / Major Mvmt	NBLn1	EBL	EBT	EBR	WBL	WBT	WBR	SBLn1
Capacity (veh/h)	260	330	-	-	177	-	-	394
HCM Lane V/C Ratio	0.242	0.049	-	-	0.123	-	-	0.006
HCM Control Delay (s)	23.2	16.475	-	-	28.167	-	-	14.2
HCM Lane LOS	C	C			D			B
HCM 95th %tile Q(veh)	0.925	0.155	-	-	0.411	-	-	0.017

Notes

~ : Volume Exceeds Capacity; $: Delay Exceeds 300 Seconds; Error : Computation Not Defined

Intersection	
Intersection Delay, s/veh	8.2
Intersection LOS	A

Movement	EBL	EBT	EBR	WBL	WBT	WBR	NBL	NBT	NBR	SBL	SBT	SBR
Vol, veh/h	9	18	1	22	16	41	0	72	48	83	80	3
Peak Hour Factor	0.92	0.92	0.92	0.92	0.92	0.92	0.92	0.92	0.92	0.92	0.92	0.92
Heavy Vehicles, %	2	2	2	2	2	2	2	2	2	2	2	2
Mvmt Flow	10	20	1	24	17	45	0	78	52	90	87	3
Number of Lanes	0	1	0	0	1	0	0	1	0	0	1	0

Approach	EB	WB	NB	SB
Opposing Approach	WB	EB	SB	NB
Opposing Lanes	1	1	1	1
Conflicting Approach Left	SB	NB	EB	WB
Conflicting Lanes Left	1	1	1	1
Conflicting Approach Right	NB	SB	WB	EB
Conflicting Lanes Right	1	1	1	1
HCM Control Delay	8	7.9	7.9	8.7
HCM LOS	A	A	A	A

Lane	NBLn1	EBLn1	WBLn1	SBLn1
Vol Left, %	0%	32%	28%	50%
Vol Thru, %	60%	64%	20%	48%
Vol Right, %	40%	4%	52%	2%
Sign Control	Stop	Stop	Stop	Stop
Traffic Vol by Lane	120	28	79	166
LT Vol	72	18	16	80
Through Vol	48	1	41	3
RT Vol	0	9	22	83
Lane Flow Rate	130	30	86	180
Geometry Grp	1	1	1	1
Degree of Util (X)	0.151	0.04	0.105	0.217
Departure Headway (Hd)	4.159	4.77	4.406	4.441
Convergence, Y/N	Yes	Yes	Yes	Yes
Cap	865	753	817	814
Service Time	2.17	2.784	2.416	2.441
HCM Lane V/C Ratio	0.15	0.04	0.105	0.221
HCM Control Delay	7.9	8	7.9	8.7
HCM Lane LOS	A	A	A	A
HCM 95th-tile Q	0.5	0.1	0.4	0.8

Notes

~ : Volume Exceeds Capacity; $: Delay Exceeds 300 Seconds; Error : Computation Not Defined

HCM 2010 Signalized Intersection Summary
4278: Midway Rd & Lindbergh Dr

7/20/2015

Movement	EBL	EBT	EBR	WBL	WBT	WBR	NBL	NBT	NBR	SBL	SBT	SBR
Lane Configurations												
Volume (veh/h)	59	32	44	55	17	189	28	2007	84	220	1869	36
Number	3	8	18	7	4	14	1	6	16	5	2	12
Initial Q (Qb), veh	0	0	0	0	0	0	0	0	0	0	0	0
Ped-Bike Adj(A_pbT)	1.00		1.00	1.00		1.00	1.00		1.00	1.00		1.00
Parking Bus Adj	1.00	1.00	1.00	1.00	1.00	1.00	1.00	1.00	1.00	1.00	1.00	1.00
Adj Sat Flow veh/h/ln	186.3	186.3	190.0	186.3	193.7	186.3	186.3	186.3	190.0	186.3	186.3	190.0
Lanes	1	1	0	1	1	1	1	3	0	1	3	0
Cap, veh/h	356	118	179	319	341	278	172	3016	135	340	3473	67
Arrive On Green	0.07	0.18	0.17	0.07	0.18	0.18	0.08	1.00	1.00	0.11	0.64	0.63
Sat Flow, veh/h	1774	667	1016	1774	1937	1583	1774	5309	238	1774	5465	105
Grp Volume(v), veh/h	87	0	111	85	23	230	43	1465	720	289	1591	790
Grp Sat Flow(s),veh/h/ln	1774	0	1683	1774	1937	1583	1774	1863	1821	1774	1863	1844
Q Serve(g_s), s	5.8	0.0	8.6	5.6	1.5	20.7	1.4	0.0	0.0	10.7	40.2	40.5
Cycle Q Clear(g_c), s	5.8	0.0	8.6	5.6	1.5	20.7	1.4	0.0	0.0	10.7	40.2	40.5
Prop In Lane	1.00		0.60	1.00		1.00	1.00		0.13	1.00		0.06
Lane Grp Cap(c), veh/h	356	0	297	319	341	278	172	2117	1034	340	2368	1172
V/C Ratio(X)	0.24	0.00	0.37	0.27	0.07	0.83	0.25	0.69	0.70	0.85	0.67	0.67
Avail Cap(c_a), veh/h	379	0	330	368	406	332	234	2117	1034	402	2368	1172
HCM Platoon Ratio	1.00	1.00	1.00	1.00	1.00	1.00	2.00	2.00	2.00	1.00	1.00	1.00
Upstream Filter(I)	1.00	0.00	1.00	1.00	1.00	1.00	1.00	1.00	1.00	1.00	1.00	1.00
Uniform Delay (d), s/veh	44.4	0.0	54.1	44.7	50.8	58.8	15.4	0.0	0.0	27.5	17.1	17.2
Incr Delay (d2), s/veh	0.4	0.0	0.8	0.4	0.1	13.6	0.8	1.9	3.9	14.0	1.5	3.1
Initial Q Delay(d3),s/veh	0.0	0.0	0.0	0.0	0.0	0.0	0.0	0.0	0.0	0.0	0.0	0.0
%ile Back of Q (50%), veh/ln	2.7	0.0	3.9	2.6	0.7	9.6	0.6	0.6	1.1	8.3	17.7	18.2
Lane Grp Delay (d), s/veh	44.7	0.0	54.9	45.2	50.9	72.3	16.1	1.9	3.9	41.5	18.7	20.3
Lane Grp LOS	D		D	D	D	E	B	A	A	D	B	C
Approach Vol, veh/h		198			338			2228			2670	
Approach Delay, s/veh		50.4			64.0			2.8			21.6	
Approach LOS		D			E			A			C	

Timer												
Assigned Phs	3	8		7	4		1	6		5	2	
Phs Duration (G+Y+Rc), s	13.1	29.1		13.0	29.0		8.8	87.0		18.8	97.0	
Change Period (Y+Rc), s	5.5	5.5		5.5	5.5		5.5	5.5		5.5	5.5	
Max Green Setting (Gmax), s	9.5	26.5		11.5	28.5		8.5	81.5		18.5	91.5	
Max Q Clear Time (g_c+I1), s	7.8	10.6		7.6	22.7		3.4	2.0		12.7	42.5	
Green Ext Time (p_c), s	0.0	1.4		0.1	0.8		0.0	64.6		0.5	42.9	

Intersection Summary	
HCM 2010 Ctrl Delay	17.6
HCM 2010 LOS	B

Notes

HCM 2010 Signalized Intersection Summary
4287: Beltway Dr & Beltline Rd

7/20/2015

Movement	EBU	EBT	EBR	WBL	WBT	NBL	NBR
Lane Configurations							
Volume (veh/h)	16	1783	27	87	1894	27	202
Number		6	16	5	2	7	14
Initial Q (Qb), veh		0	0	0	0	0	0
Ped-Bike Adj(A_pbT)			1.00	1.00		1.00	1.00
Parking Bus Adj		1.00	1.00	1.00	1.00	1.00	1.00
Adj Sat Flow veh/h/ln		186.3	190.0	186.3	186.3	186.3	186.3
Lanes		3	0	1	3	1	2
Cap, veh/h		4178	80	168	4704	202	361
Arrive On Green		0.76	0.75	0.06	0.84	0.11	0.11
Sat Flow, veh/h		5466	104	1774	5588	1774	3167
Grp Volume(v), veh/h		1252	621	112	1953	43	238
Grp Sat Flow(s),veh/h/ln		1863	1844	1774	1863	1774	1583
Q Serve(g_s), s		16.2	16.3	2.9	11.6	3.0	9.8
Cycle Q Clear(g_c), s		16.2	16.3	2.9	11.6	3.0	9.8
Prop In Lane			0.06	1.00		1.00	1.00
Lane Grp Cap(c), veh/h		2848	1410	168	4704	202	361
V/C Ratio(X)		0.44	0.44	0.67	0.42	0.21	0.66
Avail Cap(c_a), veh/h		2848	1410	266	4704	417	745
HCM Platoon Ratio		1.00	1.00	1.00	1.00	1.00	1.00
Upstream Filter(I)		1.00	1.00	1.00	1.00	1.00	1.00
Uniform Delay (d), s/veh		5.7	5.7	51.7	2.6	54.7	57.7
Incr Delay (d2), s/veh		0.5	1.0	4.5	0.3	0.5	2.1
Initial Q Delay(d3),s/veh		0.0	0.0	0.0	0.0	0.0	0.0
%ile Back of Q (50%), veh/ln		6.5	6.6	4.1	3.6	1.4	0.1
Lane Grp Delay (d), s/veh		6.2	6.7	56.2	2.9	55.2	59.8
Lane Grp LOS		A	A	E	A	E	E
Approach Vol, veh/h		1873			2065	281	
Approach Delay, s/veh		6.4			5.8	59.1	
Approach LOS		A			A	E	

Timer							
Assigned Phs		6		5	2		
Phs Duration (G+Y+Rc), s		107.0		10.5	117.5		
Change Period (Y+Rc), s		5.5		5.5	5.5		
Max Green Setting (Gmax), s		101.5		12.5	106.5		
Max Q Clear Time (g_c+I1), s		18.3		4.9	13.6		
Green Ext Time (p_c), s		53.9		0.2	57.6		

Intersection Summary	
HCM 2010 Ctrl Delay	9.6
HCM 2010 LOS	A

Notes

HCM 2010 Signalized Intersection Summary
4288: Midway Rd & Beltline Rd

7/20/2015

Movement	EBL	EBT	EBR	WBL	WBT	WBR	NBL	NBT	NBR	SBL	SBT	SBR
Lane Configurations												
Volume (veh/h)	184	1216	303	330	1094	398	300	1537	347	367	1142	173
Number	1	6	16	5	2	12	7	4	14	3	8	18
Initial Q (Qb), veh	0	0	0	0	0	0	0	0	0	0	0	0
Ped-Bike Adj(A_pbT)	1.00		1.00	1.00		1.00	1.00		1.00	1.00		1.00
Parking Bus Adj	1.00	1.00	1.00	1.00	1.00	1.00	1.00	1.00	1.00	1.00	1.00	1.00
Adj Sat Flow veh/h/ln	186.3	186.3	186.3	186.3	186.3	190.0	186.3	186.3	186.3	186.3	186.3	186.3
Lanes	2	3	1	2	3	0	2	3	1	2	3	1
Cap, veh/h	409	1921	544	409	1333	500	581	1921	544	409	1642	465
Arrive On Green	0.16	0.46	0.46	0.12	0.34	0.33	0.22	0.46	0.00	0.24	0.59	0.00
Sat Flow, veh/h	3442	5588	1583	3442	3877	1455	3442	5588	1583	3442	5588	1583
Grp Volume(v), veh/h	312	1280	384	337	1142	494	345	1689	0	390	1344	0
Grp Sat Flow(s),veh/h/ln	1721	1863	1583	1721	1863	1606	1721	1863	1583	1721	1863	1583
Q Serve(g_s), s	13.9	28.6	31.1	15.3	46.4	46.7	14.4	43.9	0.0	17.9	30.6	0.0
Cycle Q Clear(g_c), s	13.9	28.6	31.1	15.3	46.4	46.7	14.4	43.9	0.0	17.9	30.6	0.0
Prop In Lane	1.00		1.00	1.00		0.91	1.00		1.00	1.00		1.00
Lane Grp Cap(c), veh/h	409	1921	544	409	1281	552	581	1921	544	409	1642	465
V/C Ratio(X)	0.76	0.67	0.71	0.82	0.89	0.89	0.59	0.88	0.00	0.95	0.82	0.00
Avail Cap(c_a), veh/h	409	1921	544	409	1281	552	581	1921	544	409	1642	465
HCM Platoon Ratio	1.33	1.33	1.33	1.00	1.00	1.00	1.33	1.33	1.33	2.00	2.00	2.00
Upstream Filter(I)	1.00	1.00	1.00	1.00	1.00	1.00	1.00	1.00	0.00	1.00	1.00	0.00
Uniform Delay (d), s/veh	65.2	36.3	36.9	68.9	49.7	50.6	57.1	40.4	0.0	60.6	29.6	0.0
Incr Delay (d2), s/veh	12.7	1.8	7.5	17.0	9.7	19.5	4.4	6.1	0.0	34.4	4.7	0.0
Initial Q Delay(d3),s/veh	0.0	0.0	0.0	0.0	0.0	0.0	0.0	0.0	0.0	0.0	0.0	0.0
%ile Back of Q (50%), veh/ln	6.7	13.0	12.8	7.8	23.6	22.0	6.5	20.5	0.0	9.2	12.2	0.0
Lane Grp Delay (d), s/veh	77.9	38.1	44.4	85.9	59.4	70.1	61.6	46.5	0.0	95.0	34.3	0.0
Lane Grp LOS	E	D	D	F	E	E	E	D		F	C	
Approach Vol, veh/h		1976			1973			2034			1734	
Approach Delay, s/veh		45.6			66.6			49.1			47.9	
Approach LOS		D			E			D			D	

Timer												
Assigned Phs	1	6		5	2		7	4		3	8	
Phs Duration (G+Y+Rc), s	22.0	58.0		22.0	58.0		30.0	58.0		22.0	50.0	
Change Period (Y+Rc), s	6.0	6.0		6.0	6.0		6.0	6.0		6.0	6.0	
Max Green Setting (Gmax), s	16.0	52.0		16.0	52.0		24.0	52.0		16.0	44.0	
Max Q Clear Time (g_c+I1), s	15.9	33.1		17.3	48.7		16.4	45.9		19.9	32.6	
Green Ext Time (p_c), s	0.1	9.8		0.0	2.3		0.9	4.1		0.0	6.5	

Intersection Summary												
HCM 2010 Ctrl Delay			52.4									
HCM 2010 LOS			D									

Notes

HCM 2010 Signalized Intersection Summary
4289: Midway Rd & Beltway Dr

7/20/2015

Movement	EBL	EBT	EBR	WBL	WBT	WBR	NBL	NBT	NBR	SBL	SBT	SBR
Lane Configurations												
Volume (veh/h)	48	35	105	63	48	60	148	2137	96	51	1694	87
Number	3	8	18	7	4	14	1	6	16	5	2	12
Initial Q (Qb), veh	0	0	0	0	0	0	0	0	0	0	0	0
Ped-Bike Adj(A_pbT)	1.00		1.00	1.00		1.00	1.00		1.00	1.00		1.00
Parking Bus Adj	1.00	1.00	1.00	1.00	1.00	1.00	1.00	1.00	1.00	1.00	1.00	1.00
Adj Sat Flow veh/h/ln	186.3	193.7	186.3	186.3	193.7	190.0	186.3	186.3	186.3	186.3	193.7	186.3
Lanes	1	1	1	1	1	0	1	3	1	1	3	1
Cap, veh/h	247	244	199	319	100	130	291	3641	1032	209	3698	1008
Arrive On Green	0.07	0.13	0.13	0.08	0.13	0.12	0.06	0.65	0.65	0.10	1.00	1.00
Sat Flow, veh/h	1774	1937	1583	1774	766	995	1774	5588	1583	1774	5812	1583
Grp Volume(v), veh/h	86	51	131	95	0	154	151	2203	126	65	2017	107
Grp Sat Flow(s),veh/h/ln	1774	1937	1583	1774	0	1762	1774	1863	1583	1774	1937	1583
Q Serve(g_s), s	5.1	3.0	9.9	5.6	0.0	10.5	3.2	28.5	3.8	1.5	0.0	0.0
Cycle Q Clear(g_c), s	5.1	3.0	9.9	5.6	0.0	10.5	3.2	28.5	3.8	1.5	0.0	0.0
Prop In Lane	1.00		1.00	1.00		0.56	1.00		1.00	1.00		1.00
Lane Grp Cap(c), veh/h	247	244	199	319	0	230	291	3641	1032	209	3698	1008
V/C Ratio(X)	0.35	0.21	0.66	0.30	0.00	0.67	0.52	0.61	0.12	0.31	0.55	0.11
Avail Cap(c_a), veh/h	298	647	528	363	0	588	404	3641	1032	278	3698	1008
HCM Platoon Ratio	1.00	1.00	1.00	1.00	1.00	1.00	1.00	1.00	1.00	2.00	2.00	2.00
Upstream Filter(I)	1.00	1.00	1.00	1.00	0.00	1.00	1.00	1.00	1.00	1.00	1.00	1.00
Uniform Delay (d), s/veh	42.7	49.4	52.4	41.6	0.0	52.5	5.5	12.6	8.3	10.6	0.0	0.0
Incr Delay (d2), s/veh	0.8	0.4	3.7	0.5	0.0	3.4	1.4	0.8	0.2	0.8	0.6	0.2
Initial Q Delay(d3),s/veh	0.0	0.0	0.0	0.0	0.0	0.0	0.0	0.0	0.0	0.0	0.0	0.0
%ile Back of Q (50%), veh/ln	2.4	1.5	4.3	2.6	0.0	5.0	1.2	11.9	1.5	0.6	0.2	0.1
Lane Grp Delay (d), s/veh	43.6	49.8	56.1	42.1	0.0	55.9	6.9	13.4	8.5	11.4	0.6	0.2
Lane Grp LOS	D	D	E	D		E	A	B	A	B	A	A
Approach Vol, veh/h		268			249			2480			2189	
Approach Delay, s/veh		50.9			50.6			12.7			0.9	
Approach LOS		D			D			B			A	

Timer												
Assigned Phs	3	8		7	4		1	6		5	2	
Phs Duration (G+Y+Rc), s	12.3	18.8		12.9	19.4		11.0	85.0		9.1	83.1	
Change Period (Y+Rc), s	5.5	5.5		5.5	5.5		5.5	5.5		5.5	5.5	
Max Green Setting (Gmax), s	10.5	39.5		10.5	39.5		13.5	79.5		8.5	74.5	
Max Q Clear Time (g_c+I1), s	7.1	11.9		7.6	12.5		5.2	30.5		3.5	2.0	
Green Ext Time (p_c), s	0.1	1.4		0.1	1.4		0.3	43.0		0.1	60.2	

Intersection Summary												
HCM 2010 Ctrl Delay			11.5									
HCM 2010 LOS			B									

Notes

HCM 2010 Signalized Intersection Summary
4290: Midway Rd & Proton Dr

7/20/2015

Movement	EBL	EBT	EBR	WBL	WBT	WBR	NBL	NBT	NBR	SBL	SBT	SBR
Lane Configurations												
Volume (veh/h)	89	5	75	6	23	96	119	2064	8	43	1749	67
Number	3	8	18	7	4	14	1	6	16	5	2	12
Initial Q (Qb), veh	0	0	0	0	0	0	0	0	0	0	0	0
Ped-Bike Adj(A_pbT)	1.00		1.00	1.00		1.00	1.00		1.00	1.00		1.00
Parking Bus Adj	1.00	1.00	1.00	1.00	1.00	1.00	1.00	1.00	1.00	1.00	1.00	1.00
Adj Sat Flow veh/h/ln	186.3	193.7	190.0	190.0	186.3	186.3	186.3	186.3	190.0	186.3	186.3	190.0
Lanes	1	1	0	0	1	1	1	3	0	1	3	0
Cap, veh/h	310	44	312	51	164	163	242	3760	21	201	3565	141
Arrive On Green	0.09	0.21	0.21	0.10	0.10	0.10	0.05	0.68	0.67	0.06	0.89	0.87
Sat Flow, veh/h	1774	206	1472	189	1589	1583	1774	5552	31	1774	5339	212
Grp Volume(v), veh/h	113	0	106	42	0	104	123	1556	776	57	1522	751
Grp Sat Flow(s),veh/h/ln	1774	0	1678	1777	0	1583	1774	1863	1857	1774	1863	1825
Q Serve(g_s), s	7.3	0.0	7.2	0.0	0.0	8.6	2.7	31.4	31.5	1.3	13.6	14.0
Cycle Q Clear(g_c), s	7.3	0.0	7.2	2.8	0.0	8.6	2.7	31.4	31.5	1.3	13.6	14.0
Prop In Lane	1.00		0.88	0.19		1.00	1.00		0.02	1.00		0.12
Lane Grp Cap(c), veh/h	310	0	356	215	0	163	242	2523	1258	201	2487	1219
V/C Ratio(X)	0.36	0.00	0.30	0.20	0.00	0.64	0.51	0.62	0.62	0.28	0.61	0.62
Avail Cap(c_a), veh/h	351	0	593	417	0	350	341	2523	1258	266	2487	1219
HCM Platoon Ratio	1.00	1.00	1.00	1.00	1.00	1.00	1.00	1.00	1.00	1.33	1.33	1.33
Upstream Filter(I)	1.00	0.00	1.00	1.00	0.00	1.00	1.00	1.00	1.00	1.00	1.00	1.00
Uniform Delay (d), s/veh	46.0	0.0	45.0	55.9	0.0	58.5	8.8	12.1	12.2	10.9	3.3	3.4
Incr Delay (d2), s/veh	0.7	0.0	0.5	0.4	0.0	4.1	1.7	1.1	2.3	0.8	1.1	2.3
Initial Q Delay(d3),s/veh	0.0	0.0	0.0	0.0	0.0	0.0	0.0	0.0	0.0	0.0	0.0	0.0
%ile Back of Q (50%), veh/ln	3.4	0.0	3.2	1.4	0.0	3.7	1.1	13.4	13.7	0.6	3.4	3.9
Lane Grp Delay (d), s/veh	46.7	0.0	45.5	56.4	0.0	62.6	10.4	13.3	14.4	11.7	4.4	5.7
Lane Grp LOS	D		D	E		E	B	B	B	B	A	A
Approach Vol, veh/h		219			146			2455			2330	
Approach Delay, s/veh		46.1			60.8			13.5			5.0	
Approach LOS		D			E			B			A	
Timer												
Assigned Phs	3	8			4		1	6		5	2	
Phs Duration (G+Y+Rc), s	14.8	31.8			17.0		10.3	95.0		9.0	93.7	
Change Period (Y+Rc), s	5.5	5.5			5.5		5.5	5.5		5.5	5.5	
Max Green Setting (Gmax), s	12.5	45.5			27.5		12.5	89.5		8.5	85.5	
Max Q Clear Time (g_c+I1), s	9.3	9.2			10.6		4.7	33.5		3.3	16.0	
Green Ext Time (p_c), s	0.1	1.1			0.9		0.2	48.3		0.0	58.0	
Intersection Summary												
HCM 2010 Ctrl Delay			12.4									
HCM 2010 LOS			B									
Notes												

HCM 2010 Signalized Intersection Summary
4295: Runyon Rd & Beltline Rd

7/20/2015

Movement	EBL	EBT	EBR	WBL	WBT	WBR	NBL	NBT	NBR	SBL	SBT	SBR
Lane Configurations												
Volume (veh/h)	16	1708	39	100	1364	11	92	1	51	18	1	23
Number	1	6	16	5	2	12	7	4	14	3	8	18
Initial Q (Qb), veh	0	0	0	0	0	0	0	0	0	0	0	0
Ped-Bike Adj(A_pbT)	1.00		1.00	1.00		1.00	1.00		1.00	1.00		1.00
Parking Bus Adj	1.00	1.00	1.00	1.00	1.00	1.00	1.00	1.00	1.00	1.00	1.00	1.00
Adj Sat Flow veh/h/ln	186.3	186.3	186.3	186.3	186.3	190.0	186.3	186.3	190.0	186.3	186.3	190.0
Lanes	1	3	1	1	3	0	2	1	0	1	1	0
Cap, veh/h	353	3888	1102	325	3954	40	505	6	165	180	14	116
Arrive On Green	0.06	0.93	0.93	0.12	1.00	1.00	0.07	0.11	0.10	0.04	0.08	0.07
Sat Flow, veh/h	1774	5588	1583	1774	5522	56	3442	56	1535	1774	179	1431
Grp Volume(v), veh/h	36	1798	71	189	1058	526	137	0	113	33	0	36
Grp Sat Flow(s),veh/h/ln	1774	1863	1583	1774	1863	1853	1721	0	1592	1774	0	1610
Q Serve(g_s), s	0.7	5.4	0.5	3.4	0.0	0.0	4.3	0.0	8.9	2.2	0.0	2.7
Cycle Q Clear(g_c), s	0.7	5.4	0.5	3.4	0.0	0.0	4.3	0.0	8.9	2.2	0.0	2.7
Prop In Lane	1.00		1.00	1.00		0.03	1.00		0.96	1.00		0.89
Lane Grp Cap(c), veh/h	353	3888	1102	325	2668	1327	505	0	171	180	0	130
V/C Ratio(X)	0.10	0.46	0.06	0.58	0.40	0.40	0.27	0.00	0.66	0.18	0.00	0.28
Avail Cap(c_a), veh/h	416	3888	1102	352	2668	1327	536	0	443	270	0	473
HCM Platoon Ratio	1.33	1.33	1.33	2.00	2.00	2.00	1.00	1.00	1.00	1.00	1.00	1.00
Upstream Filter(I)	0.85	0.85	0.85	1.00	1.00	1.00	1.00	0.00	1.00	1.00	0.00	1.00
Uniform Delay (d), s/veh	4.5	1.7	1.5	4.2	0.0	0.0	44.3	0.0	56.2	50.8	0.0	56.5
Incr Delay (d2), s/veh	0.1	0.3	0.1	2.1	0.4	0.9	0.3	0.0	4.3	0.5	0.0	1.1
Initial Q Delay(d3),s/veh	0.0	0.0	0.0	0.0	0.0	0.0	0.0	0.0	0.0	0.0	0.0	0.0
%ile Back of Q (50%), veh/ln	0.2	1.5	0.2	1.1	0.2	0.3	1.9	0.0	3.9	1.0	0.0	1.2
Lane Grp Delay (d), s/veh	4.6	2.0	1.6	6.3	0.4	0.9	44.6	0.0	60.4	51.3	0.0	57.6
Lane Grp LOS	A	A	A	A	A	A	D		E	D		E
Approach Vol, veh/h		1905			1773			250			69	
Approach Delay, s/veh		2.0			1.2			51.8			54.6	
Approach LOS		A			A			D			D	
Timer												
Assigned Phs	1	6		5	2		7	4		3	8	
Phs Duration (G+Y+Rc), s	8.4	93.0		11.0	95.6		11.8	16.9		8.4	13.5	
Change Period (Y+Rc), s	5.5	5.5		5.5	5.5		5.5	5.5		5.5	5.5	
Max Green Setting (Gmax), s	7.5	87.5		7.5	87.5		7.5	33.5		9.5	35.5	
Max Q Clear Time (g_c+I1), s	2.7	7.4		5.4	2.0		6.3	10.9		4.2	4.7	
Green Ext Time (p_c), s	0.0	43.4		0.1	44.8		0.1	0.6		0.0	0.6	
Intersection Summary												
HCM 2010 Ctrl Delay			5.7									
HCM 2010 LOS			A									
Notes												

Lane Group	EBL	EBT	EBR	WBL	WBT	WBR	NBL	NBT	NBR	SBL	SBT	SBR
Lane Configurations												
Volume (vph)	113	1455	52	55	1398	45	79	127	96	63	132	158
Ideal Flow (vphpl)	1900	1900	1900	1900	1900	1900	1900	1900	1900	1900	1900	1900
Storage Length (ft)	150		0	200		0	100		140	100		120
Storage Lanes	1		0	1		0	1		1	1		0
Taper Length (ft)	25			25			25			25		
Lane Util. Factor	1.00	0.91	0.91	1.00	0.91	0.91	1.00	1.00	1.00	1.00	1.00	1.00
Frt		0.993			0.995				0.850			0.850
Flt Protected	0.950			0.950			0.950			0.950		
Satd. Flow (prot)	1770	5050	0	1770	5060	0	1770	1863	1583	1770	1863	1583
Flt Permitted	0.080			0.118			0.299			0.499		
Satd. Flow (perm)	149	5050	0	220	5060	0	557	1863	1583	930	1863	1583
Right Turn on Red			Yes			Yes			Yes			Yes
Satd. Flow (RTOR)		7			5				170			232
Link Speed (mph)		40			40			30			30	
Link Distance (ft)		907			950			997			322	
Travel Time (s)		15.5			16.2			22.7			7.3	
Peak Hour Factor	0.59	0.94	0.68	0.90	0.89	0.86	0.89	0.94	0.90	0.73	0.91	0.68
Adj. Flow (vph)	192	1548	76	61	1571	52	89	135	107	86	145	232
Shared Lane Traffic (%)												
Lane Group Flow (vph)	192	1624	0	61	1623	0	89	135	107	86	145	232
Enter Blocked Intersection	No	No	No	No	No	No	No	No	No	No	No	No
Lane Alignment	Left	Left	Right	Left	Left	Right	Left	Left	Right	Left	Left	Right
Median Width(ft)		12			12			12			12	
Link Offset(ft)		0			0			0			0	
Crosswalk Width(ft)		16			16			16			16	
Two way Left Turn Lane												
Headway Factor	1.00	1.00	1.00	1.00	1.00	1.00	1.00	1.00	1.00	1.00	1.00	1.00
Turning Speed (mph)	15		9	15		9	15		9	15		9
Number of Detectors	1	1		1	1		1	1	1	1	1	1
Detector Template												
Leading Detector (ft)	50	50		50	50		50	50	50	50	50	50
Trailing Detector (ft)	0	0		0	0		0	0	0	0	0	0
Detector 1 Position(ft)	0	0		0	0		0	0	0	0	0	0
Detector 1 Size(ft)	50	50		50	50		50	50	50	50	50	50
Detector 1 Type	Cl+Ex	Cl+Ex		Cl+Ex	Cl+Ex		Cl+Ex	Cl+Ex	Cl+Ex	Cl+Ex	Cl+Ex	Cl+Ex
Detector 1 Channel												
Detector 1 Extend (s)	0.0	0.0		0.0	0.0		0.0	0.0	0.0	0.0	0.0	0.0
Detector 1 Queue (s)	0.0	0.0		0.0	0.0		0.0	0.0	0.0	0.0	0.0	0.0
Detector 1 Delay (s)	0.0	0.0		0.0	0.0		0.0	0.0	0.0	0.0	0.0	0.0
Turn Type	pm+pt	NA		pm+pt	NA		custom	NA	Perm	pm+pt	NA	custom
Protected Phases	1	6 14		13	2 10		15	4 12		11	8 16	
Permitted Phases	6 14			2 10			4		4 12	8 16		8
Detector Phase	1	6 14		13	2 10		15	4 12	4 12	11	8 16	8
Switch Phase												
Minimum Initial (s)	4.0			4.0			4.0			4.0		4.0
Minimum Split (s)	13.0			13.0			13.0			13.0		16.0
Total Split (s)	16.0			16.0			13.0			13.0		20.0
Total Split (%)	10.0%			10.0%			8.1%			8.1%		12.5%

Lane Group	ø2	ø4	ø6	ø10	ø12	ø14	ø16
Lane Configurations							
Volume (vph)							
Ideal Flow (vphpl)							
Storage Length (ft)							
Storage Lanes							
Taper Length (ft)							
Lane Util. Factor							
Frt							
Flt Protected							
Satd. Flow (prot)							
Flt Permitted							
Satd. Flow (perm)							
Right Turn on Red							
Satd. Flow (RTOR)							
Link Speed (mph)							
Link Distance (ft)							
Travel Time (s)							
Peak Hour Factor							
Adj. Flow (vph)							
Shared Lane Traffic (%)							
Lane Group Flow (vph)							
Enter Blocked Intersection							
Lane Alignment							
Median Width(ft)							
Link Offset(ft)							
Crosswalk Width(ft)							
Two way Left Turn Lane							
Headway Factor							
Turning Speed (mph)							
Number of Detectors							
Detector Template							
Leading Detector (ft)							
Trailing Detector (ft)							
Detector 1 Position(ft)							
Detector 1 Size(ft)							
Detector 1 Type							
Detector 1 Channel							
Detector 1 Extend (s)							
Detector 1 Queue (s)							
Detector 1 Delay (s)							
Turn Type							
Protected Phases	2	4	6	10	12	14	16
Permitted Phases							
Detector Phase							
Switch Phase							
Minimum Initial (s)	4.0	4.0	4.0	4.0	4.0	4.0	4.0
Minimum Split (s)	29.5	16.0	24.5	22.0	22.0	22.0	22.0
Total Split (s)	35.0	20.0	51.0	56.0	20.0	40.0	20.0
Total Split (%)	22%	13%	32%	35%	13%	25%	13%

Lane Group	EBL	EBT	EBR	WBL	WBT	WBR	NBL	NBT	NBR	SBL	SBT	SBR
Maximum Green (s)	10.5			10.5			7.5			7.5		14.5
Yellow Time (s)	3.5			3.5			3.5			3.5		3.5
All-Red Time (s)	2.0			2.0			2.0			2.0		2.0
Lost Time Adjust (s)	-2.5			-2.5			-3.0			-2.5		-2.5
Total Lost Time (s)	3.0			3.0			2.5			3.0		3.0
Lead/Lag	Lead			Lead			Lead			Lead		
Lead-Lag Optimize?	Yes			Yes			Yes			Yes		
Vehicle Extension (s)	3.0			3.0			3.0			3.0		3.0
Recall Mode	None			None			None			None		None
Walk Time (s)												5.0
Flash Dont Walk (s)												2.0
Pedestrian Calls (#/hr)												0
Act Effct Green (s)	95.2	95.2		89.1	89.1		23.8	30.1	30.1	39.9	30.1	12.9
Actuated g/C Ratio	0.60	0.60		0.56	0.56		0.15	0.19	0.19	0.25	0.19	0.08
v/c Ratio	0.87	0.54		0.29	0.58		0.55	0.39	0.25	0.30	0.41	0.68
Control Delay	70.0	10.9		14.7	11.8		51.9	32.3	1.3	25.8	32.9	18.3
Queue Delay	0.0	0.0		0.0	0.0		0.0	0.0	0.0	0.0	0.0	0.0
Total Delay	70.0	10.9		14.7	11.8		51.9	32.3	1.3	25.8	32.9	18.3
LOS	E	B		B	B		D	C	A	C	C	B
Approach Delay		17.2			11.9			27.6			24.3	
Approach LOS		B			B			C			C	

Intersection Summary	
Area Type:	Other
Cycle Length: 160	
Actuated Cycle Length: 160	
Offset: 117 (73%), Referenced to phase 2:WBTL and 6:EBTL, Start of 1st Green	
Natural Cycle: 130	
Control Type: Actuated-Coordinated	
Maximum v/c Ratio: 0.87	
Intersection Signal Delay: 16.7	Intersection LOS: B
Intersection Capacity Utilization 58.9%	ICU Level of Service B
Analysis Period (min) 15	

Splits and Phases: 4296: Surveyor Blvd & Beltline Rd

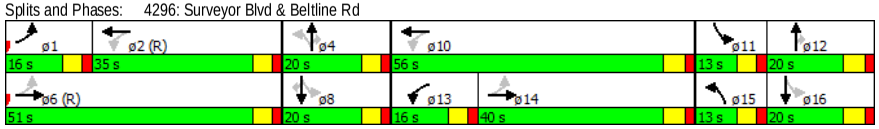

Lane Group	ø2	ø4	ø6	ø10	ø12	ø14	ø16
Maximum Green (s)	29.5	14.5	45.5	50.0	14.0	34.0	14.0
Yellow Time (s)	3.5	3.5	3.5	4.0	4.0	4.0	4.0
All-Red Time (s)	2.0	2.0	2.0	2.0	2.0	2.0	2.0
Lost Time Adjust (s)							
Total Lost Time (s)							
Lead/Lag	Lag				Lag	Lag	Lag
Lead-Lag Optimize?	Yes						
Vehicle Extension (s)	3.0	3.0	3.0	3.0	3.0	3.0	3.0
Recall Mode	C-Max	Min	C-Max	Max	Min	None	Max
Walk Time (s)	5.0	5.0	5.0	5.0	5.0	5.0	5.0
Flash Dont Walk (s)	19.0	24.0	14.0	11.0	11.0	11.0	11.0
Pedestrian Calls (#/hr)	0	0	0	0	0	0	0
Act Effct Green (s)							
Actuated g/C Ratio							
v/c Ratio							
Control Delay							
Queue Delay							
Total Delay							
LOS							
Approach Delay							
Approach LOS							

Intersection Summary

HCM 2010 TWSC
2: Northeast Drive & Beltline Rd

7/20/2015

Intersection	
Intersection Delay, s/veh	0.7

Movement	EBT	EBR	WBL	WBT	NBL	NBR
Vol, veh/h	1716	15	0	0	0	51
Conflicting Peds, #/hr	0	0	0	0	0	0
Sign Control	Free	Free	Free	Free	Stop	Stop
RT Channelized	-	None	-	None	-	None
Storage Length	-	140	-	-	-	0
Veh in Median Storage, #	0	-	-	0	0	-
Grade, %	0	-	-	0	0	-
Peak Hour Factor	92	92	92	92	92	92
Heavy Vehicles, %	2	2	2	2	2	2
Mvmt Flow	1865	16	0	0	0	55

Major/Minor	Major1		Major2		Minor1	
Conflicting Flow All	0	0	1865	0	1865	933
Stage 1	-	-	-	-	1865	-
Stage 2	-	-	-	-	0	-
Follow-up Headway	-	-	3.12	-	3.82	3.92
Pot Capacity-1 Maneuver	-	-	146	-	111	230
Stage 1	-	-	-	-	69	-
Stage 2	-	-	-	-	-	-
Time blocked-Platoon, %	-	-		-		
Mov Capacity-1 Maneuver	-	-	146	-	111	230
Mov Capacity-2 Maneuver	-	-	-	-	111	-
Stage 1	-	-	-	-	69	-
Stage 2	-	-	-	-	-	-

Approach	EB	WB	NB
HCM Control Delay, s	0	0	25.6
HCM LOS			D

Minor Lane / Major Mvmt	NBLn1	EBT	EBR	WBL	WBT
Capacity (veh/h)	230	-	-	146	-
HCM Lane V/C Ratio	0.241	-	-	-	-
HCM Control Delay (s)	25.6	-	-	0	-
HCM Lane LOS	D			A	
HCM 95th %tile Q(veh)	0.914	-	-	0	-

Notes

~ : Volume Exceeds Capacity; $: Delay Exceeds 300 Seconds; Error : Computation Not Defined

HCM 2010 TWSC
4: Midway Rd & East Drive

7/20/2015

Intersection	
Intersection Delay, s/veh	0.4

Movement	EBL	EBR	NBL	NBT	SBT	SBR
Vol, veh/h	1	15	24	2205	1866	7
Conflicting Peds, #/hr	0	0	0	0	0	0
Sign Control	Stop	Stop	Free	Free	Free	Free
RT Channelized	-	None	-	None	-	None
Storage Length	0	-	125	-	-	-
Veh in Median Storage, #	0	-	-	0	0	-
Grade, %	0	-	-	0	0	-
Peak Hour Factor	92	92	92	92	92	92
Heavy Vehicles, %	2	2	2	2	2	2
Mvmt Flow	1	16	26	2397	2028	8

Major/Minor	Minor2		Major1		Major2	
Conflicting Flow All	3074	1018	2036	0	-	0
Stage 1	2063	-	-	-	-	-
Stage 2	1011	-	-	-	-	-
Follow-up Headway	3.82	3.92	3.12	-	-	-
Pot Capacity-1 Maneuver	24	202	120	-	-	-
Stage 1	52	-	-	-	-	-
Stage 2	282	-	-	-	-	-
Time blocked-Platoon, %				-	-	-
Mov Capacity-1 Maneuver	19	202	120	-	-	-
Mov Capacity-2 Maneuver	19	-	-	-	-	-
Stage 1	52	-	-	-	-	-
Stage 2	221	-	-	-	-	-

Approach	EB	NB	SB
HCM Control Delay, s	38.1	0.5	0
HCM LOS	E		

Minor Lane / Major Mvmt	NBL	NBT	EBLn1	SBU	SBT	SBR
Capacity (veh/h)	120	-	126	-	-	-
HCM Lane V/C Ratio	0.217	-	0.138	-	-	-
HCM Control Delay (s)	43.145	-	38.1	-	-	-
HCM Lane LOS	E		E			
HCM 95th %tile Q(veh)	0.781	-	0.464	-	-	-

Notes

~ : Volume Exceeds Capacity; $: Delay Exceeds 300 Seconds; Error : Computation Not Defined

Intersection	
Intersection Delay, s/veh	42.1

Movement	EBL	EBT	EBR	WBL	WBT	WBR	NBL	NBT	NBR	SBL	SBT	SBR
Vol, veh/h	1	0	4	12	0	104	18	2527	29	30	1790	8
Conflicting Peds, #/hr	0	0	0	0	0	0	0	0	0	0	0	0
Sign Control	Stop	Stop	Stop	Stop	Stop	Stop	Free	Free	Free	Free	Free	Free
RT Channelized	-	-	None	-	-	None	-	-	None	-	-	None
Storage Length	-	-	-	-	-	0	130	-	-	125	-	-
Veh in Median Storage, #	-	0	-	-	0	-	-	0	-	-	0	-
Grade, %	-	0	-	-	0	-	-	0	-	-	0	-
Peak Hour Factor	92	92	92	92	92	92	92	92	92	92	92	92
Heavy Vehicles, %	2	2	2	2	2	2	2	2	2	2	2	2
Mvmt Flow	1	0	4	13	0	113	20	2747	32	33	1946	9

Major/Minor	Minor2			Minor1			Major1			Major2		
Conflicting Flow All	3153	4832	977	3645	4822	1389	1954	0	0	2778	0	0
Stage 1	2015	2015	-	2802	2802	-	-	-	-	-	-	-
Stage 2	1138	2817	-	843	2020	-	-	-	-	-	-	-
Follow-up Headway	3.82	4.02	3.92	3.82	4.02	3.92	3.12	-	-	3.12	-	-
Pot Capacity-1 Maneuver	12	1	215	# 5	1	# 113	132	-	-	50	-	-
Stage 1	38	101	-	# 10	39	-	-	-	-	-	-	-
Stage 2	193	39	-	294	101	-	-	-	-	-	-	-
Time blocked-Platoon, %								-	-		-	-
Mov Capacity-1 Maneuver	-	0	215	# 2	0	# 113	132	-	-	50	-	-
Mov Capacity-2 Maneuver	-	0	-	# 2	0	-	-	-	-	-	-	-
Stage 1	32	34	-	# 8	33	-	-	-	-	-	-	-
Stage 2	-	33	-	98	34	-	-	-	-	-	-	-

Approach	EB	WB	NB	SB
HCM Control Delay, s	+	$ 1594	0.3	2.7
HCM LOS	-	F		

Minor Lane / Major Mvmt	NBL	NBT	NBR	EBLn1	WBLn1	WBLn2	SBL	SBT	SBR
Capacity (veh/h)	132	-	-	+	7	113	50	-	-
HCM Lane V/C Ratio	0.148	-	-	+	7.246	0.667	0.652	-	-
HCM Control Delay (s)	36.961	-	-	+	$ 3835.8	85.1	163.831	-	-
HCM Lane LOS	E			+	F	F	F		
HCM 95th %tile Q(veh)	0.504	-	-	+	7.88	3.461	2.575	-	-

Notes

~ : Volume Exceeds Capacity; $: Delay Exceeds 300 Seconds; Error : Computation Not Defined

Intersection	
Intersection Delay, s/veh	1.3

Movement	EBL	EBT	WBT	WBR	SBL	SBR
Vol, veh/h	2	29	50	25	15	1
Conflicting Peds, #/hr	0	0	0	0	0	0
Sign Control	Free	Free	Free	Free	Stop	Stop
RT Channelized	-	None	-	None	-	None
Storage Length	-	-	-	-	0	-
Veh in Median Storage, #	-	0	0	-	0	-
Grade, %	-	0	0	-	0	-
Peak Hour Factor	92	92	92	92	92	92
Heavy Vehicles, %	2	2	2	2	2	2
Mvmt Flow	2	32	54	27	16	1

Major/Minor	Major1		Major2		Minor2	
Conflicting Flow All	82	0	-	0	104	68
Stage 1	-	-	-	-	68	-
Stage 2	-	-	-	-	36	-
Follow-up Headway	2.218	-	-	-	3.518	3.318
Pot Capacity-1 Maneuver	1515	-	-	-	894	995
Stage 1	-	-	-	-	955	-
Stage 2	-	-	-	-	986	-
Time blocked-Platoon, %		-	-	-		
Mov Capacity-1 Maneuver	1515	-	-	-	893	995
Mov Capacity-2 Maneuver	-	-	-	-	893	-
Stage 1	-	-	-	-	955	-
Stage 2	-	-	-	-	985	-

Approach	EB	WB	SB
HCM Control Delay, s	0.5	0	9.1
HCM LOS			A

Minor Lane / Major Mvmt	EBL	EBT	WBT	WBR	SBLn1
Capacity (veh/h)	1515	-	-	-	899
HCM Lane V/C Ratio	0.001	-	-	-	0.019
HCM Control Delay (s)	7.38	0	-	-	9.1
HCM Lane LOS	A	A			A
HCM 95th %tile Q(veh)	0.004	-	-	-	0.059

Notes

~ : Volume Exceeds Capacity; $: Delay Exceeds 300 Seconds; Error : Computation Not Defined

HCM 2010 TWSC
12: Beltway Dr & Proposed Drive 2

7/20/2015

Intersection	
Intersection Delay, s/veh	2.5

Movement	EBL	EBT	WBT	WBR	SBL	SBR
Vol, veh/h	5	13	19	32	19	3
Conflicting Peds, #/hr	0	0	0	0	0	0
Sign Control	Free	Free	Free	Free	Stop	Stop
RT Channelized	-	None	-	None	-	None
Storage Length	-	-	-	-	0	-
Veh in Median Storage, #	-	0	0	-	0	-
Grade, %	-	0	0	-	0	-
Peak Hour Factor	92	92	92	92	92	92
Heavy Vehicles, %	2	2	2	2	2	2
Mvmt Flow	5	14	21	35	21	3

Major/Minor	Major1		Major2		Minor2	
Conflicting Flow All	55	0	-	0	63	38
Stage 1	-	-	-	-	38	-
Stage 2	-	-	-	-	25	-
Follow-up Headway	2.218	-	-	-	3.518	3.318
Pot Capacity-1 Maneuver	1550	-	-	-	943	1034
Stage 1	-	-	-	-	984	-
Stage 2	-	-	-	-	998	-
Time blocked-Platoon, %		-	-	-		
Mov Capacity-1 Maneuver	1550	-	-	-	940	1034
Mov Capacity-2 Maneuver	-	-	-	-	940	-
Stage 1	-	-	-	-	984	-
Stage 2	-	-	-	-	995	-

Approach	EB	WB	SB
HCM Control Delay, s	2	0	8.9
HCM LOS			A

Minor Lane / Major Mvmt	EBL	EBT	WBT	WBR	SBLn1
Capacity (veh/h)	1550	-	-	-	952
HCM Lane V/C Ratio	0.004	-	-	-	0.025
HCM Control Delay (s)	7.331	0	-	-	8.9
HCM Lane LOS	A	A			A
HCM 95th %tile Q(veh)	0.011	-	-	-	0.077

Notes

~ : Volume Exceeds Capacity; $: Delay Exceeds 300 Seconds; Error : Computation Not Defined

HCM 2010 TWSC
15: Beltway Dr & Proposed Drive 3

7/20/2015

Intersection	
Intersection Delay, s/veh	3.2

Movement	EBL	EBT	WBT	WBR	SBL	SBR
Vol, veh/h	5	7	4	17	10	3
Conflicting Peds, #/hr	0	0	0	0	0	0
Sign Control	Free	Free	Free	Free	Stop	Stop
RT Channelized	-	None	-	None	-	None
Storage Length	-	-	-	-	0	-
Veh in Median Storage, #	-	0	0	-	0	-
Grade, %	-	0	0	-	0	-
Peak Hour Factor	92	92	92	92	92	92
Heavy Vehicles, %	2	2	2	2	2	2
Mvmt Flow	5	8	4	18	11	3

Major/Minor	Major1		Major2		Minor2	
Conflicting Flow All	23	0	-	0	32	14
Stage 1	-	-	-	-	14	-
Stage 2	-	-	-	-	18	-
Follow-up Headway	2.218	-	-	-	3.518	3.318
Pot Capacity-1 Maneuver	1592	-	-	-	982	1066
Stage 1	-	-	-	-	1009	-
Stage 2	-	-	-	-	1005	-
Time blocked-Platoon, %		-	-	-		
Mov Capacity-1 Maneuver	1592	-	-	-	979	1066
Mov Capacity-2 Maneuver	-	-	-	-	979	-
Stage 1	-	-	-	-	1009	-
Stage 2	-	-	-	-	1002	-

Approach	EB	WB	SB
HCM Control Delay, s	3	0	8.7
HCM LOS			A

Minor Lane / Major Mvmt	EBL	EBT	WBT	WBR	SBLn1
Capacity (veh/h)	1592	-	-	-	998
HCM Lane V/C Ratio	0.003	-	-	-	0.014
HCM Control Delay (s)	7.269	0	-	-	8.7
HCM Lane LOS	A	A			A
HCM 95th %tile Q(veh)	0.01	-	-	-	0.043

Notes

~ : Volume Exceeds Capacity; $: Delay Exceeds 300 Seconds; Error : Computation Not Defined

Two Way Analysis cannot be performed on an All Way Stop Intersection.

Intersection	
Intersection Delay, s/veh	5.6

Movement	EBL	EBT	EBR	WBL	WBT	WBR	NBL	NBT	NBR	SBL	SBT	SBR
Vol, veh/h	29	1651	37	138	1466	6	0	0	81	0	0	17
Conflicting Peds, #/hr	0	0	0	0	0	0	0	0	0	0	0	0
Sign Control	Free	Free	Free	Free	Free	Free	Stop	Stop	Stop	Stop	Stop	Stop
RT Channelized	-	-	None	-	-	None	-	-	None	-	-	None
Storage Length	160	-	160	175	-	-	-	-	0	-	-	0
Veh in Median Storage, #	-	0	-	-	0	-	-	0	-	-	0	-
Grade, %	-	0	-	-	0	-	-	0	-	-	0	-
Peak Hour Factor	92	92	92	92	92	92	92	92	92	92	92	92
Heavy Vehicles, %	2	2	2	2	2	2	2	2	2	2	2	2
Mvmt Flow	32	1795	40	150	1593	7	0	0	88	0	0	18

Major/Minor	Major1			Major2			Minor1			Minor2		
Conflicting Flow All	1600	0	0	1795	0	0	2795	3758	897	2678	3755	800
Stage 1	-	-	-	-	-	-	1858	1858	-	1897	1897	-
Stage 2	-	-	-	-	-	-	937	1900	-	781	1858	-
Follow-up Headway	3.12	-	-	3.12	-	-	3.82	4.02	3.92	3.82	4.02	3.92
Pot Capacity-1 Maneuver	199	-	-	159	-	-	20	4	243	24	4	281
Stage 1	-	-	-	-	-	-	49	122	-	46	116	-
Stage 2	-	-	-	-	-	-	257	116	-	321	122	-
Time blocked-Platoon, %		-	-		-	-						
Mov Capacity-1 Maneuver	199	-	-	159	-	-	3	0	243	2	0	281
Mov Capacity-2 Maneuver	-	-	-	-	-	-	3	0	-	2	0	-
Stage 1	-	-	-	-	-	-	41	102	-	39	7	-
Stage 2	-	-	-	-	-	-	14	7	-	172	102	-

Approach	EB	WB	NB	SB
HCM Control Delay, s	0.4	9.8	28	18.7
HCM LOS			D	C

Minor Lane / Major Mvmt	NBLn1	EBL	EBT	EBR	WBL	WBT	WBR	SBLn1
Capacity (veh/h)	243	199	-	-	159	-	-	281
HCM Lane V/C Ratio	0.362	0.158	-	-	0.943	-	-	0.066
HCM Control Delay (s)	28	26.465	-	-	113.77	-	-	18.7
HCM Lane LOS	D	D			F			C
HCM 95th %tile Q(veh)	1.576	0.55	-	-	6.959	-	-	0.21

Notes

~ : Volume Exceeds Capacity; $: Delay Exceeds 300 Seconds; Error : Computation Not Defined

Intersection	
Intersection Delay, s/veh	10.1
Intersection LOS	B

Movement	EBL	EBT	EBR	WBL	WBT	WBR	NBL	NBT	NBR	SBL	SBT	SBR
Vol, veh/h	8	19	3	48	22	183	2	113	78	97	113	11
Peak Hour Factor	0.92	0.92	0.92	0.92	0.92	0.92	0.92	0.92	0.92	0.92	0.92	0.92
Heavy Vehicles, %	2	2	2	2	2	2	2	2	2	2	2	2
Mvmt Flow	9	21	3	52	24	199	2	123	85	105	123	12
Number of Lanes	0	1	0	0	1	0	0	1	0	0	1	0

Approach	EB	WB	NB	SB
Opposing Approach	WB	EB	SB	NB
Opposing Lanes	1	1	1	1
Conflicting Approach Left	SB	NB	EB	WB
Conflicting Lanes Left	1	1	1	1
Conflicting Approach Right	NB	SB	WB	EB
Conflicting Lanes Right	1	1	1	1
HCM Control Delay	8.8	10.3	9.6	10.6
HCM LOS	A	B	A	B

Lane	NBLn1	EBLn1	WBLn1	SBLn1
Vol Left, %	1%	27%	19%	44%
Vol Thru, %	59%	63%	9%	51%
Vol Right, %	40%	10%	72%	5%
Sign Control	Stop	Stop	Stop	Stop
Traffic Vol by Lane	193	30	253	221
LT Vol	113	19	22	113
Through Vol	78	3	183	11
RT Vol	2	8	48	97
Lane Flow Rate	210	33	275	240
Geometry Grp	1	1	1	1
Degree of Util (X)	0.276	0.05	0.355	0.332
Departure Headway (Hd)	4.734	5.477	4.652	4.978
Convergence, Y/N	Yes	Yes	Yes	Yes
Cap	751	658	767	716
Service Time	2.814	3.477	2.722	3.058
HCM Lane V/C Ratio	0.28	0.05	0.359	0.335
HCM Control Delay	9.6	8.8	10.3	10.6
HCM Lane LOS	A	A	B	B
HCM 95th-tile Q	1.1	0.2	1.6	1.5

Notes

~ : Volume Exceeds Capacity; $: Delay Exceeds 300 Seconds; Error : Computation Not Defined

Synchro^{TM} Output - 2035 Background Plus Site Traffic (Alternative 2)

HCM 2010 Signalized Intersection Summary
4278: Midway Rd & Lindbergh Dr

7/20/2015

Movement	EBL	EBT	EBR	WBL	WBT	WBR	NBL	NBT	NBR	SBL	SBT	SBR
Lane Configurations												
Volume (veh/h)	20	11	8	21	20	178	45	1230	55	237	2680	65
Number	3	8	18	7	4	14	1	6	16	5	2	12
Initial Q (Qb), veh	0	0	0	0	0	0	0	0	0	0	0	0
Ped-Bike Adj(A_pbT)	1.00		1.00	1.00		1.00	1.00		1.00	1.00		1.00
Parking Bus Adj	1.00	1.00	1.00	1.00	1.00	1.00	1.00	1.00	1.00	1.00	1.00	1.00
Adj Sat Flow veh/h/ln	186.3	186.3	190.0	186.3	193.7	186.3	186.3	186.3	190.0	186.3	186.3	190.0
Lanes	1	1	0	1	1	1	1	3	0	1	3	0
Cap, veh/h	296	161	129	334	328	268	137	3268	158	460	3599	86
Arrive On Green	0.04	0.17	0.16	0.04	0.17	0.17	0.09	1.00	1.00	0.09	0.66	0.65
Sat Flow, veh/h	1774	960	768	1774	1937	1583	1774	5287	256	1774	5435	130
Grp Volume(v), veh/h	29	0	27	32	27	217	69	903	440	312	2287	1144
Grp Sat Flow(s),veh/h/ln	1774	0	1727	1774	1937	1583	1774	1863	1818	1774	1863	1840
Q Serve(g_s), s	1.8	0.0	1.8	2.0	1.6	18.3	1.9	0.0	0.0	7.0	74.7	77.2
Cycle Q Clear(g_c), s	1.8	0.0	1.8	2.0	1.6	18.3	1.9	0.0	0.0	7.0	74.7	77.2
Prop In Lane	1.00		0.44	1.00		1.00	1.00		0.14	1.00		0.07
Lane Grp Cap(c), veh/h	296	0	290	334	328	268	137	2303	1123	460	2467	1218
V/C Ratio(X)	0.10	0.00	0.09	0.10	0.08	0.81	0.50	0.39	0.39	0.68	0.93	0.94
Avail Cap(c_a), veh/h	358	0	385	393	432	353	249	2303	1123	583	2467	1218
HCM Platoon Ratio	1.00	1.00	1.00	1.00	1.00	1.00	2.00	2.00	2.00	1.00	1.00	1.00
Upstream Filter(I)	1.00	0.00	1.00	1.00	1.00	1.00	1.00	1.00	1.00	1.00	1.00	1.00
Uniform Delay (d), s/veh	44.6	0.0	49.1	44.4	48.6	55.5	32.5	0.0	0.0	5.7	20.5	21.0
Incr Delay (d2), s/veh	0.1	0.0	0.1	0.1	0.1	10.1	2.9	0.5	1.0	2.2	7.6	14.8
Initial Q Delay(d3),s/veh	0.0	0.0	0.0	0.0	0.0	0.0	0.0	0.0	0.0	0.0	0.0	0.0
%ile Back of Q (50%), veh/ln	0.8	0.0	0.8	0.9	0.8	8.3	2.4	0.2	0.3	2.6	33.7	36.8
Lane Grp Delay (d), s/veh	44.7	0.0	49.3	44.5	48.7	65.6	35.4	0.5	1.0	7.9	28.1	35.8
Lane Grp LOS	D		D	D	D	E	D	A	A	A	C	D
Approach Vol, veh/h		56			276			1412			3743	
Approach Delay, s/veh		46.9			61.5			2.4			28.8	
Approach LOS		D			E			A			C	

Timer												
Assigned Phs	3	8		7	4		1	6		5	2	
Phs Duration (G+Y+Rc), s	8.2	26.4		8.4	26.5		9.2	88.9		15.3	95.0	
Change Period (Y+Rc), s	5.5	5.5		5.5	5.5		5.5	5.5		5.5	5.5	
Max Green Setting (Gmax), s	7.5	28.5		7.5	28.5		12.5	82.5		19.5	89.5	
Max Q Clear Time (g_c+I1), s	3.8	3.8		4.0	20.3		3.9	2.0		9.0	79.2	
Green Ext Time (p_c), s	0.0	1.2		0.0	0.7		0.1	71.2		0.9	10.1	

Intersection Summary												
HCM 2010 Ctrl Delay			23.8									
HCM 2010 LOS			C									

Notes

HCM 2010 Signalized Intersection Summary
4287: Beltway Dr & Beltline Rd

7/20/2015

Movement	EBU	EBT	EBR	WBL	WBT	NBL	NBR
Lane Configurations							
Volume (veh/h)	2	1975	21	118	1697	9	80
Number		6	16	5	2	7	14
Initial Q (Qb), veh		0	0	0	0	0	0
Ped-Bike Adj(A_pbT)			1.00	1.00		1.00	1.00
Parking Bus Adj		1.00	1.00	1.00	1.00	1.00	1.00
Adj Sat Flow veh/h/ln		186.3	190.0	186.3	186.3	186.3	186.3
Lanes		3	0	1	3	1	2
Cap, veh/h		4348	58	209	4969	116	206
Arrive On Green		0.79	0.78	0.08	0.89	0.07	0.07
Sat Flow, veh/h		5502	73	1774	5588	1774	3167
Grp Volume(v), veh/h		1378	685	151	1749	14	94
Grp Sat Flow(s),veh/h/ln		1863	1850	1774	1863	1774	1583
Q Serve(g_s), s		16.2	16.3	5.4	6.6	1.0	3.8
Cycle Q Clear(g_c), s		16.2	16.3	5.4	6.6	1.0	3.8
Prop In Lane			0.04	1.00		1.00	1.00
Lane Grp Cap(c), veh/h		2944	1462	209	4969	116	206
V/C Ratio(X)		0.47	0.47	0.72	0.35	0.12	0.46
Avail Cap(c_a), veh/h		2944	1462	275	4969	431	770
HCM Platoon Ratio		1.00	1.00	1.00	1.00	1.00	1.00
Upstream Filter(I)		1.00	1.00	1.00	1.00	1.00	1.00
Uniform Delay (d), s/veh		4.6	4.6	54.4	1.2	58.0	59.3
Incr Delay (d2), s/veh		0.5	1.1	6.3	0.2	0.5	1.6
Initial Q Delay(d3),s/veh		0.0	0.0	0.0	0.0	0.0	0.0
%ile Back of Q (50%), veh/ln		6.0	6.2	5.4	1.4	0.5	0.0
Lane Grp Delay (d), s/veh		5.1	5.7	60.7	1.4	58.4	60.8
Lane Grp LOS		A	A	E	A	E	E
Approach Vol, veh/h		2063			1900	108	
Approach Delay, s/veh		5.3			6.1	60.5	
Approach LOS		A			A	E	

Timer							
Assigned Phs		6		5	2		
Phs Duration (G+Y+Rc), s		107.0		13.0	120.0		
Change Period (Y+Rc), s		5.5		5.5	5.5		
Max Green Setting (Gmax), s		101.5		12.5	106.5		
Max Q Clear Time (g_c+I1), s		18.3		7.4	8.6		
Green Ext Time (p_c), s		53.3		0.2	58.6		

Intersection Summary							
HCM 2010 Ctrl Delay			7.1				
HCM 2010 LOS			A				

Notes

HCM 2010 Signalized Intersection Summary
4288: Midway Rd & Beltline Rd

7/20/2015

Movement	EBL	EBT	EBR	WBL	WBT	WBR	NBL	NBT	NBR	SBL	SBT	SBR
Lane Configurations												
Volume (veh/h)	183	1139	324	346	915	372	153	686	282	539	1927	161
Number	1	6	16	5	2	12	7	4	14	3	8	18
Initial Q (Qb), veh	0	0	0	0	0	0	0	0	0	0	0	0
Ped-Bike Adj(A_pbT)	1.00		1.00	1.00		1.00	1.00		1.00	1.00		1.00
Parking Bus Adj	1.00	1.00	1.00	1.00	1.00	1.00	1.00	1.00	1.00	1.00	1.00	1.00
Adj Sat Flow veh/h/ln	186.3	186.3	186.3	186.3	186.3	190.0	186.3	186.3	186.3	186.3	186.3	186.3
Lanes	2	3	1	2	3	0	2	3	1	2	3	1
Cap, veh/h	258	1502	426	559	1332	560	258	1886	534	538	2340	663
Arrive On Green	0.15	0.54	0.54	0.16	0.36	0.34	0.15	0.68	0.00	0.31	0.84	0.00
Sat Flow, veh/h	3442	5588	1583	3442	3740	1571	3442	5588	1583	3442	5588	1583
Grp Volume(v), veh/h	310	1199	410	353	991	422	176	754	0	573	2267	0
Grp Sat Flow(s),veh/h/ln	1721	1863	1583	1721	1863	1586	1721	1863	1583	1721	1863	1583
Q Serve(g_s), s	12.0	27.8	39.7	15.3	37.3	37.6	7.7	9.6	0.0	25.0	55.9	0.0
Cycle Q Clear(g_c), s	12.0	27.8	39.7	15.3	37.3	37.6	7.7	9.6	0.0	25.0	55.9	0.0
Prop In Lane	1.00		1.00	1.00		0.99	1.00		1.00	1.00		1.00
Lane Grp Cap(c), veh/h	258	1502	426	559	1327	565	258	1886	534	538	2340	663
V/C Ratio(X)	1.20	0.80	0.96	0.63	0.75	0.75	0.68	0.40	0.00	1.07	0.97	0.00
Avail Cap(c_a), veh/h	258	1502	426	559	1327	565	258	1886	534	538	2340	663
HCM Platoon Ratio	2.00	2.00	2.00	1.00	1.00	1.00	2.00	2.00	2.00	2.00	2.00	2.00
Upstream Filter(I)	1.00	1.00	1.00	1.00	1.00	1.00	1.00	1.00	0.00	1.00	1.00	0.00
Uniform Delay (d), s/veh	68.0	33.5	36.2	62.5	45.2	46.1	66.2	18.8	0.0	55.0	12.1	0.0
Incr Delay (d2), s/veh	121.5	4.5	35.4	5.3	3.9	8.7	13.6	0.6	0.0	57.4	12.6	0.0
Initial Q Delay(d3),s/veh	0.0	0.0	0.0	0.0	0.0	0.0	0.0	0.0	0.0	0.0	0.0	0.0
%ile Back of Q (50%), veh/ln	9.3	11.5	17.4	7.2	18.3	16.5	3.7	3.6	0.0	14.1	11.5	0.0
Lane Grp Delay (d), s/veh	189.5	38.0	71.6	67.9	49.0	54.9	79.8	19.4	0.0	112.4	24.7	0.0
Lane Grp LOS	F	D	E	E	D	D	E	B		F	C	
Approach Vol, veh/h		1919			1766			930			2840	
Approach Delay, s/veh		69.7			54.2			30.9			42.4	
Approach LOS		E			D			C			D	

Timer												
Assigned Phs	1	6		5	2		7	4		3	8	
Phs Duration (G+Y+Rc), s	15.0	46.0		29.0	60.0		15.0	57.0		28.0	70.0	
Change Period (Y+Rc), s	6.0	6.0		6.0	6.0		6.0	6.0		6.0	6.0	
Max Green Setting (Gmax), s	9.0	40.0		23.0	54.0		9.0	51.0		22.0	64.0	
Max Q Clear Time (g_c+I1), s	14.0	41.7		17.3	39.6		9.7	11.6		27.0	57.9	
Green Ext Time (p_c), s	0.0	0.0		0.8	6.0		0.0	3.8		0.0	5.4	

Intersection Summary												
HCM 2010 Ctrl Delay			50.8									
HCM 2010 LOS			D									

Notes

HCM 2010 Signalized Intersection Summary
4289: Midway Rd & Beltway Dr

7/20/2015

Movement	EBL	EBT	EBR	WBL	WBT	WBR	NBL	NBT	NBR	SBL	SBT	SBR
Lane Configurations												
Volume (veh/h)	57	42	141	37	10	54	61	1040	33	47	2466	42
Number	3	8	18	7	4	14	1	6	16	5	2	12
Initial Q (Qb), veh	0	0	0	0	0	0	0	0	0	0	0	0
Ped-Bike Adj(A_pbT)	1.00		1.00	1.00		1.00	1.00		1.00	1.00		1.00
Parking Bus Adj	1.00	1.00	1.00	1.00	1.00	1.00	1.00	1.00	1.00	1.00	1.00	1.00
Adj Sat Flow veh/h/ln	186.3	193.7	186.3	186.3	193.7	190.0	186.3	186.3	186.3	186.3	193.7	186.3
Lanes	1	1	1	1	1	0	1	3	1	1	3	1
Cap, veh/h	298	294	240	297	33	183	192	3645	1033	467	3789	1032
Arrive On Green	0.08	0.15	0.15	0.06	0.13	0.12	0.09	1.00	1.00	0.09	1.00	1.00
Sat Flow, veh/h	1774	1937	1583	1774	256	1429	1774	5588	1583	1774	5812	1583
Grp Volume(v), veh/h	102	61	176	56	0	92	62	1072	43	60	2936	52
Grp Sat Flow(s),veh/h/ln	1774	1937	1583	1774	0	1685	1774	1863	1583	1774	1937	1583
Q Serve(g_s), s	5.9	3.6	13.7	3.4	0.0	6.5	1.4	0.0	0.0	1.3	0.0	0.0
Cycle Q Clear(g_c), s	5.9	3.6	13.7	3.4	0.0	6.5	1.4	0.0	0.0	1.3	0.0	0.0
Prop In Lane	1.00		1.00	1.00		0.85	1.00		1.00	1.00		1.00
Lane Grp Cap(c), veh/h	298	294	240	297	0	216	192	3645	1033	467	3789	1032
V/C Ratio(X)	0.34	0.21	0.73	0.19	0.00	0.43	0.32	0.29	0.04	0.13	0.77	0.05
Avail Cap(c_a), veh/h	322	632	516	362	0	549	246	3645	1033	522	3789	1032
HCM Platoon Ratio	1.00	1.00	1.00	1.00	1.00	1.00	2.00	2.00	2.00	2.00	2.00	2.00
Upstream Filter(I)	1.00	1.00	1.00	1.00	0.00	1.00	1.00	1.00	1.00	1.00	1.00	1.00
Uniform Delay (d), s/veh	39.3	47.9	52.2	44.3	0.0	52.4	5.7	0.0	0.0	5.7	0.0	0.0
Incr Delay (d2), s/veh	0.7	0.3	4.3	0.3	0.0	1.3	1.0	0.2	0.1	0.1	1.6	0.1
Initial Q Delay(d3),s/veh	0.0	0.0	0.0	0.0	0.0	0.0	0.0	0.0	0.0	0.0	0.0	0.0
%ile Back of Q (50%), veh/ln	2.7	1.8	5.9	1.6	0.0	3.0	0.5	0.1	0.0	0.5	0.6	0.0
Lane Grp Delay (d), s/veh	40.0	48.2	56.4	44.6	0.0	53.7	6.7	0.2	0.1	5.9	1.6	0.1
Lane Grp LOS	D	D	E	D		D	A	A	A	A	A	A
Approach Vol, veh/h		339			148			1177			3048	
Approach Delay, s/veh		50.0			50.3			0.5			1.7	
Approach LOS		D			D			A			A	

Timer												
Assigned Phs	3	8		7	4		1	6		5	2	
Phs Duration (G+Y+Rc), s	13.3	22.5		10.2	19.5		9.1	87.0		9.0	87.0	
Change Period (Y+Rc), s	5.5	5.5		5.5	5.5		5.5	5.5		5.5	5.5	
Max Green Setting (Gmax), s	9.5	39.5		9.5	39.5		7.5	81.5		7.5	81.5	
Max Q Clear Time (g_c+I1), s	7.9	15.7		5.4	8.5		3.4	2.0		3.3	2.0	
Green Ext Time (p_c), s	0.0	1.4		0.0	1.4		0.0	63.4		0.0	63.4	

Intersection Summary												
HCM 2010 Ctrl Delay			6.4									
HCM 2010 LOS			A									

Notes

HCM 2010 Signalized Intersection Summary
4290: Midway Rd & Proton Dr

7/20/2015

Movement	EBL	EBT	EBR	WBL	WBT	WBR	NBL	NBT	NBR	SBL	SBT	SBR
Lane Configurations												
Volume (veh/h)	80	27	177	3	8	32	38	1105	12	234	2228	84
Number	3	8	18	7	4	14	1	6	16	5	2	12
Initial Q (Qb), veh	0	0	0	0	0	0	0	0	0	0	0	0
Ped-Bike Adj(A_pbT)	1.00		1.00	1.00		1.00	1.00		1.00	1.00		1.00
Parking Bus Adj	1.00	1.00	1.00	1.00	1.00	1.00	1.00	1.00	1.00	1.00	1.00	1.00
Adj Sat Flow veh/h/ln	186.3	193.7	190.0	190.0	186.3	186.3	186.3	186.3	190.0	186.3	186.3	190.0
Lanes	1	1	0	0	1	1	1	3	0	1	3	0
Cap, veh/h	257	86	266	51	124	163	183	3489	53	447	3662	141
Arrive On Green	0.08	0.21	0.21	0.10	0.10	0.10	0.04	0.64	0.62	0.18	1.00	1.00
Sat Flow, veh/h	1774	419	1291	170	1207	1583	1774	5489	84	1774	5345	206
Grp Volume(v), veh/h	101	0	290	16	0	35	39	843	418	312	1930	964
Grp Sat Flow(s),veh/h/ln	1774	0	1709	1377	0	1583	1774	1863	1848	1774	1863	1826
Q Serve(g_s), s	6.5	0.0	21.8	0.0	0.0	2.7	1.0	14.3	14.3	6.9	0.0	0.0
Cycle Q Clear(g_c), s	6.5	0.0	21.8	7.9	0.0	2.7	1.0	14.3	14.3	6.9	0.0	0.0
Prop In Lane	1.00		0.76	0.25		1.00	1.00		0.05	1.00		0.11
Lane Grp Cap(c), veh/h	257	0	353	175	0	163	183	2368	1174	447	2552	1251
V/C Ratio(X)	0.39	0.00	0.82	0.09	0.00	0.21	0.21	0.36	0.36	0.70	0.76	0.77
Avail Cap(c_a), veh/h	311	0	611	366	0	354	255	2368	1174	576	2552	1251
HCM Platoon Ratio	1.00	1.00	1.00	1.00	1.00	1.00	1.00	1.00	1.00	2.00	2.00	2.00
Upstream Filter(I)	1.00	0.00	1.00	1.00	0.00	1.00	1.00	1.00	1.00	1.00	1.00	1.00
Uniform Delay (d), s/veh	46.1	0.0	50.9	54.5	0.0	55.2	7.2	11.5	11.5	8.2	0.0	0.0
Incr Delay (d2), s/veh	1.0	0.0	4.8	0.2	0.0	0.7	0.6	0.4	0.8	2.6	2.1	4.6
Initial Q Delay(d3),s/veh	0.0	0.0	0.0	0.0	0.0	0.0	0.0	0.0	0.0	0.0	0.0	0.0
%ile Back of Q (50%), veh/ln	3.1	0.0	10.1	0.5	0.0	1.1	0.4	6.1	6.2	3.3	0.8	1.6
Lane Grp Delay (d), s/veh	47.1	0.0	55.7	54.7	0.0	55.9	7.7	11.9	12.4	10.8	2.1	4.6
Lane Grp LOS	D		E	D		E	A	B	B	B	A	A
Approach Vol, veh/h		391			51			1300			3206	
Approach Delay, s/veh		53.5			55.5			12.0			3.7	
Approach LOS		D			E			B			A	

Timer												
Assigned Phs	3	8			4		1	6		5	2	
Phs Duration (G+Y+Rc), s	13.9	30.7			16.8		8.6	88.3		15.2	95.0	
Change Period (Y+Rc), s	5.5	5.5			5.5		5.5	5.5		5.5	5.5	
Max Green Setting (Gmax), s	12.5	45.5			27.5		8.5	78.5		19.5	89.5	
Max Q Clear Time (g_c+I1), s	8.5	23.8			9.9		3.0	16.3		8.9	2.0	
Green Ext Time (p_c), s	0.1	1.4			1.4		0.0	49.2		0.9	63.5	

Intersection Summary			
HCM 2010 Ctrl Delay			10.4
HCM 2010 LOS			B

Notes

HCM 2010 Signalized Intersection Summary
4295: Runyon Rd & Beltline Rd

7/20/2015

Movement	EBL	EBT	EBR	WBL	WBT	WBR	NBL	NBT	NBR	SBL	SBT	SBR
Lane Configurations												
Volume (veh/h)	9	1543	16	34	1200	0	44	0	30	10	1	2
Number	1	6	16	5	2	12	7	4	14	3	8	18
Initial Q (Qb), veh	0	0	0	0	0	0	0	0	0	0	0	0
Ped-Bike Adj(A_pbT)	1.00		1.00	1.00		1.00	1.00		1.00	1.00		1.00
Parking Bus Adj	1.00	1.00	1.00	1.00	1.00	1.00	1.00	1.00	1.00	1.00	1.00	1.00
Adj Sat Flow veh/h/ln	186.3	186.3	186.3	186.3	186.3	190.0	186.3	186.3	190.0	186.3	186.3	190.0
Lanes	1	3	1	1	3	0	2	1	0	1	1	0
Cap, veh/h	413	4129	1170	369	4202	0	452	0	123	173	62	46
Arrive On Green	0.07	1.00	1.00	0.10	1.00	0.00	0.05	0.00	0.07	0.04	0.06	0.05
Sat Flow, veh/h	1774	5588	1583	1774	5588	0	3442	0	1583	1774	990	742
Grp Volume(v), veh/h	20	1624	29	64	1379	0	66	0	64	18	0	7
Grp Sat Flow(s),veh/h/ln	1774	1863	1583	1774	1863	0	1721	0	1583	1774	0	1732
Q Serve(g_s), s	0.3	0.0	0.0	0.9	0.0	0.0	2.1	0.0	4.8	1.1	0.0	0.5
Cycle Q Clear(g_c), s	0.3	0.0	0.0	0.9	0.0	0.0	2.1	0.0	4.8	1.1	0.0	0.5
Prop In Lane	1.00		1.00	1.00		0.00	1.00		1.00	1.00		0.43
Lane Grp Cap(c), veh/h	413	4129	1170	369	4202	0	452	0	123	173	0	108
V/C Ratio(X)	0.05	0.39	0.02	0.17	0.33	0.00	0.15	0.00	0.52	0.10	0.00	0.06
Avail Cap(c_a), veh/h	494	4129	1170	427	4202	0	560	0	455	300	0	540
HCM Platoon Ratio	2.00	2.00	2.00	2.00	2.00	2.00	1.00	1.00	1.00	1.00	1.00	1.00
Upstream Filter(I)	0.84	0.84	0.84	1.00	1.00	0.00	1.00	0.00	1.00	1.00	0.00	1.00
Uniform Delay (d), s/veh	3.0	0.0	0.0	2.3	0.0	0.0	46.5	0.0	54.8	50.1	0.0	54.1
Incr Delay (d2), s/veh	0.0	0.2	0.0	0.2	0.2	0.0	0.1	0.0	3.4	0.3	0.0	0.2
Initial Q Delay(d3),s/veh	0.0	0.0	0.0	0.0	0.0	0.0	0.0	0.0	0.0	0.0	0.0	0.0
%ile Back of Q (50%), veh/ln	0.1	0.1	0.0	0.3	0.1	0.0	0.9	0.0	2.1	0.5	0.0	0.2
Lane Grp Delay (d), s/veh	3.0	0.2	0.0	2.5	0.2	0.0	46.6	0.0	58.2	50.4	0.0	54.3
Lane Grp LOS	A	A	A	A	A		D		E	D		D
Approach Vol, veh/h		1673			1443			130			25	
Approach Delay, s/veh		0.3			0.3			52.3			51.5	
Approach LOS		A			A			D			D	

Timer												
Assigned Phs	1	6		5	2		7	4		3	8	
Phs Duration (G+Y+Rc), s	7.5	93.0		9.0	94.6		9.2	12.4		7.3	10.6	
Change Period (Y+Rc), s	5.5	5.5		5.5	5.5		5.5	5.5		5.5	5.5	
Max Green Setting (Gmax), s	7.5	87.5		7.5	87.5		7.5	32.5		10.5	35.5	
Max Q Clear Time (g_c+I1), s	2.3	2.0		2.9	2.0		4.1	6.8		3.1	2.5	
Green Ext Time (p_c), s	0.0	36.1		0.0	36.1		0.0	0.2		0.0	0.3	

Intersection Summary			
HCM 2010 Ctrl Delay			2.7
HCM 2010 LOS			A

Notes

Lane Group	EBL	EBT	EBR	WBL	WBT	WBR	NBL	NBT	NBR	SBL	SBT	SBR
Lane Configurations												
Volume (vph)	160	1459	48	84	1094	53	27	57	51	30	75	135
Ideal Flow (vphpl)	1900	1900	1900	1900	1900	1900	1900	1900	1900	1900	1900	1900
Storage Length (ft)	150		0	200		0	100		140	100		120
Storage Lanes	1		0	1		0	1		1	1		0
Taper Length (ft)	25			25			25			25		
Lane Util. Factor	1.00	0.91	0.91	1.00	0.91	0.91	1.00	1.00	1.00	1.00	1.00	1.00
Frt		0.993			0.993				0.850			0.850
Flt Protected	0.950			0.950			0.950			0.950		
Satd. Flow (prot)	1770	5050	0	1770	5050	0	1770	1863	1583	1770	1863	1583
Flt Permitted	0.130			0.122			0.521			0.683		
Satd. Flow (perm)	242	5050	0	227	5050	0	970	1863	1583	1272	1863	1583
Right Turn on Red			Yes			Yes			Yes			Yes
Satd. Flow (RTOR)		6			7				170			211
Link Speed (mph)		40			40			30			30	
Link Distance (ft)		907			950			997			322	
Travel Time (s)		15.5			16.2			22.7			7.3	
Peak Hour Factor	0.59	0.94	0.68	0.90	0.89	0.86	0.89	0.94	0.90	0.73	0.91	0.68
Adj. Flow (vph)	271	1552	71	93	1229	62	30	61	57	41	82	199
Shared Lane Traffic (%)												
Lane Group Flow (vph)	271	1623	0	93	1291	0	30	61	57	41	82	199
Enter Blocked Intersection	No	No	No	No	No	No	No	No	No	No	No	No
Lane Alignment	Left	Left	Right	Left	Left	Right	Left	Left	Right	Left	Left	Right
Median Width(ft)		12			12			12			12	
Link Offset(ft)		0			0			0			0	
Crosswalk Width(ft)		16			16			16			16	
Two way Left Turn Lane												
Headway Factor	1.00	1.00	1.00	1.00	1.00	1.00	1.00	1.00	1.00	1.00	1.00	1.00
Turning Speed (mph)	15		9	15		9	15		9	15		9
Number of Detectors	1	1		1	1		1	1	1	1	1	1
Detector Template												
Leading Detector (ft)	50	50		50	50		50	50	50	50	50	50
Trailing Detector (ft)	0	0		0	0		0	0	0	0	0	0
Detector 1 Position(ft)	0	0		0	0		0	0	0	0	0	0
Detector 1 Size(ft)	50	50		50	50		50	50	50	50	50	50
Detector 1 Type	Cl+Ex	Cl+Ex		Cl+Ex	Cl+Ex		Cl+Ex	Cl+Ex	Cl+Ex	Cl+Ex	Cl+Ex	Cl+Ex
Detector 1 Channel												
Detector 1 Extend (s)	0.0	0.0		0.0	0.0		0.0	0.0	0.0	0.0	0.0	0.0
Detector 1 Queue (s)	0.0	0.0		0.0	0.0		0.0	0.0	0.0	0.0	0.0	0.0
Detector 1 Delay (s)	0.0	0.0		0.0	0.0		0.0	0.0	0.0	0.0	0.0	0.0
Turn Type	pm+pt	NA		pm+pt	NA		custom	NA	Perm	pm+pt	NA	custom
Protected Phases	1	6 14		13	2 10		15	4 12		11	8 16	
Permitted Phases	6 14			2 10			4		4 12	8 16		8
Detector Phase	1	6 14		13	2 10		15	4 12	4 12	11	8 16	8
Switch Phase												
Minimum Initial (s)	4.0			4.0			4.0			4.0		4.0
Minimum Split (s)	13.0			13.0			13.0			13.0		16.0
Total Split (s)	20.0			18.0			13.0			13.0		20.0
Total Split (%)	12.5%			11.3%			8.1%			8.1%		12.5%

Lane Group	ø2	ø4	ø6	ø10	ø12	ø14	ø16
Lane Configurations							
Volume (vph)							
Ideal Flow (vphpl)							
Storage Length (ft)							
Storage Lanes							
Taper Length (ft)							
Lane Util. Factor							
Frt							
Flt Protected							
Satd. Flow (prot)							
Flt Permitted							
Satd. Flow (perm)							
Right Turn on Red							
Satd. Flow (RTOR)							
Link Speed (mph)							
Link Distance (ft)							
Travel Time (s)							
Peak Hour Factor							
Adj. Flow (vph)							
Shared Lane Traffic (%)							
Lane Group Flow (vph)							
Enter Blocked Intersection							
Lane Alignment							
Median Width(ft)							
Link Offset(ft)							
Crosswalk Width(ft)							
Two way Left Turn Lane							
Headway Factor							
Turning Speed (mph)							
Number of Detectors							
Detector Template							
Leading Detector (ft)							
Trailing Detector (ft)							
Detector 1 Position(ft)							
Detector 1 Size(ft)							
Detector 1 Type							
Detector 1 Channel							
Detector 1 Extend (s)							
Detector 1 Queue (s)							
Detector 1 Delay (s)							
Turn Type							
Protected Phases	2	4	6	10	12	14	16
Permitted Phases							
Detector Phase							
Switch Phase							
Minimum Initial (s)	4.0	4.0	4.0	4.0	4.0	4.0	4.0
Minimum Split (s)	29.5	16.0	24.5	22.0	22.0	22.0	22.0
Total Split (s)	35.0	20.0	55.0	53.0	19.0	35.0	19.0
Total Split (%)	22%	13%	34%	33%	12%	22%	12%

Lane Group	EBL	EBT	EBR	WBL	WBT	WBR	NBL	NBT	NBR	SBL	SBT	SBR
Maximum Green (s)	14.5			12.5			7.5			7.5		14.5
Yellow Time (s)	3.5			3.5			3.5			3.5		3.5
All-Red Time (s)	2.0			2.0			2.0			2.0		2.0
Lost Time Adjust (s)	-2.5			-2.5			-3.0			-2.5		-2.5
Total Lost Time (s)	3.0			3.0			2.5			3.0		3.0
Lead/Lag	Lead			Lead			Lead			Lead		
Lead-Lag Optimize?	Yes			Yes			Yes			Yes		
Vehicle Extension (s)	3.0			3.0			3.0			3.0		3.0
Recall Mode	None			None			None			None		None
Walk Time (s)												5.0
Flash Dont Walk (s)												2.0
Pedestrian Calls (#/hr)												0
Act Effct Green (s)	94.2	94.2		87.6	87.6		21.4	30.3	30.3	38.8	32.9	11.4
Actuated g/C Ratio	0.59	0.59		0.55	0.55		0.13	0.19	0.19	0.24	0.21	0.07
v/c Ratio	0.89	0.55		0.42	0.47		0.17	0.17	0.13	0.12	0.21	0.65
Control Delay	60.3	11.1		23.6	12.2		32.8	29.2	0.6	23.4	28.8	16.7
Queue Delay	0.0	0.0		0.0	0.0		0.0	0.0	0.0	0.0	0.0	0.0
Total Delay	60.3	11.1		23.6	12.2		32.8	29.2	0.6	23.4	28.8	16.7
LOS	E	B		C	B		C	C	A	C	C	B
Approach Delay		18.1			13.0			18.9			20.6	
Approach LOS		B			B			B			C	

Intersection Summary	
Area Type:	Other
Cycle Length: 160	
Actuated Cycle Length: 160	
Offset: 75 (47%), Referenced to phase 2:WBTL and 6:EBTL, Start of 1st Green	
Natural Cycle: 130	
Control Type: Actuated-Coordinated	
Maximum v/c Ratio: 0.89	
Intersection Signal Delay: 16.5	Intersection LOS: B
Intersection Capacity Utilization 52.2%	ICU Level of Service A
Analysis Period (min) 15	

Splits and Phases: 4296: Surveyor Blvd & Beltline Rd

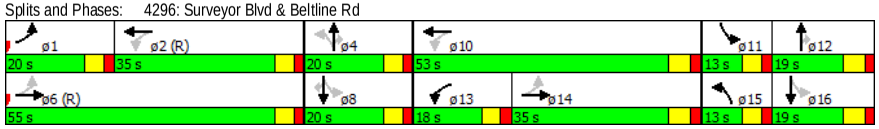

Lane Group	ø2	ø4	ø6	ø10	ø12	ø14	ø16
Maximum Green (s)	29.5	14.5	49.5	47.0	13.0	29.0	13.0
Yellow Time (s)	3.5	3.5	3.5	4.0	4.0	4.0	4.0
All-Red Time (s)	2.0	2.0	2.0	2.0	2.0	2.0	2.0
Lost Time Adjust (s)							
Total Lost Time (s)							
Lead/Lag	Lag				Lag	Lag	Lag
Lead-Lag Optimize?	Yes						
Vehicle Extension (s)	3.0	3.0	3.0	3.0	3.0	3.0	3.0
Recall Mode	C-Max	Min	C-Max	Max	Min	None	Max
Walk Time (s)	5.0	5.0	5.0	5.0	5.0	5.0	5.0
Flash Dont Walk (s)	19.0	24.0	14.0	11.0	11.0	11.0	11.0
Pedestrian Calls (#/hr)	0	0	0	0	0	0	0
Act Effct Green (s)							
Actuated g/C Ratio							
v/c Ratio							
Control Delay							
Queue Delay							
Total Delay							
LOS							
Approach Delay							
Approach LOS							

Intersection Summary

HCM 2010 TWSC
2: Northeast Drive & Beltline Rd

7/20/2015

Intersection	
Intersection Delay, s/veh	0.8

Movement	EBT	EBR	WBL	WBT	NBL	NBR
Vol, veh/h	1752	1	0	0	0	54
Conflicting Peds, #/hr	0	0	0	0	0	0
Sign Control	Free	Free	Free	Free	Stop	Stop
RT Channelized	-	None	-	None	-	None
Storage Length	-	140	-	-	-	0
Veh in Median Storage, #	0	-	-	0	0	-
Grade, %	0	-	-	0	0	-
Peak Hour Factor	92	92	92	92	92	92
Heavy Vehicles, %	2	2	2	2	2	2
Mvmt Flow	1904	1	0	0	0	59

Major/Minor	Major1		Major2		Minor1	
Conflicting Flow All	0	0	1904	0	1904	952
Stage 1	-	-	-	-	1904	-
Stage 2	-	-	-	-	0	-
Follow-up Headway	-	-	3.12	-	3.82	3.92
Pot Capacity-1 Maneuver	-	-	140	-	105	223
Stage 1	-	-	-	-	66	-
Stage 2	-	-	-	-	-	-
Time blocked-Platoon, %	-	-		-		
Mov Capacity-1 Maneuver	-	-	140	-	105	223
Mov Capacity-2 Maneuver	-	-	-	-	105	-
Stage 1	-	-	-	-	66	-
Stage 2	-	-	-	-	-	-

Approach	EB	WB	NB
HCM Control Delay, s	0	0	26.8
HCM LOS			D

Minor Lane / Major Mvmt	NBLn1	EBT	EBR	WBL	WBT
Capacity (veh/h)	223	-	-	140	-
HCM Lane V/C Ratio	0.263	-	-	-	-
HCM Control Delay (s)	26.8	-	-	0	-
HCM Lane LOS	D			A	
HCM 95th %tile Q(veh)	1.021	-	-	0	-

Notes

~ : Volume Exceeds Capacity; $: Delay Exceeds 300 Seconds; Error : Computation Not Defined

HCM 2010 TWSC
4: Midway Rd & East Drive

7/20/2015

Intersection	
Intersection Delay, s/veh	2.5

Movement	EBL	EBR	NBL	NBT	SBT	SBR
Vol, veh/h	0	55	29	1133	2619	13
Conflicting Peds, #/hr	0	0	0	0	0	0
Sign Control	Stop	Stop	Free	Free	Free	Free
RT Channelized	-	None	-	None	-	None
Storage Length	-	0	125	-	-	-
Veh in Median Storage, #	0	-	-	0	0	-
Grade, %	0	-	-	0	0	-
Peak Hour Factor	92	92	92	92	92	92
Heavy Vehicles, %	2	2	2	2	2	2
Mvmt Flow	0	60	32	1232	2847	14

Major/Minor	Minor2		Major1		Major2	
Conflicting Flow All	3471	1430	2861	0	-	0
Stage 1	2915	-	-	-	-	-
Stage 2	556	-	-	-	-	-
Follow-up Headway	3.82	3.92	3.12	-	-	-
Pot Capacity-1 Maneuver	14	106	45	-	-	-
Stage 1	14	-	-	-	-	-
Stage 2	491	-	-	-	-	-
Time blocked-Platoon, %				-	-	-
Mov Capacity-1 Maneuver	4	106	45	-	-	-
Mov Capacity-2 Maneuver	4	-	-	-	-	-
Stage 1	14	-	-	-	-	-
Stage 2	142	-	-	-	-	-

Approach	EB	NB	SB
HCM Control Delay, s	75.9	4.7	0
HCM LOS	F		

Minor Lane / Major Mvmt	NBL	NBT	EBLn1	SBU	SBT	SBR
Capacity (veh/h)	45	-	106	-	-	-
HCM Lane V/C Ratio	0.7	-	0.564	-	-	-
HCM Control Delay (s)	190.117	-	75.9	-	-	-
HCM Lane LOS	F		F			
HCM 95th %tile Q(veh)	2.697	-	2.658	-	-	-

Notes

~ : Volume Exceeds Capacity; $: Delay Exceeds 300 Seconds; Error : Computation Not Defined

Intersection	
Intersection Delay, s/veh	1.2

Movement	EBL	EBT	EBR	WBL	WBT	WBR	NBL	NBT	NBR	SBL	SBT	SBR
Vol, veh/h	0	0	1	4	0	10	7	1119	38	97	2605	0
Conflicting Peds, #/hr	0	0	0	0	0	0	0	0	0	0	0	0
Sign Control	Stop	Stop	Stop	Stop	Stop	Stop	Free	Free	Free	Free	Free	Free
RT Channelized	-	-	None	-	-	None	-	-	None	-	-	None
Storage Length	-	-	-	-	-	0	130	-	-	125	-	-
Veh in Median Storage, #	-	0	-	-	0	-	-	0	-	-	0	-
Grade, %	-	0	-	-	0	-	-	0	-	-	0	-
Peak Hour Factor	92	92	92	92	92	92	92	92	92	92	92	92
Heavy Vehicles, %	2	2	2	2	2	2	2	2	2	2	2	2
Mvmt Flow	0	0	1	4	0	11	8	1216	41	105	2832	0

Major/Minor	Minor2			Minor1			Major1			Major2		
Conflicting Flow All	3544	4315	1416	2595	4294	629	2832	0	0	1258	0	0
Stage 1	3042	3042	-	1252	1252	-	-	-	-	-	-	-
Stage 2	502	1273	-	1343	3042	-	-	-	-	-	-	-
Follow-up Headway	3.82	4.02	3.92	3.82	4.02	3.92	3.12	-	-	3.12	-	-
Pot Capacity-1 Maneuver	6	2	109	27	2	364	46	-	-	293	-	-
Stage 1	6	29	-	133	242	-	-	-	-	-	-	-
Stage 2	475	237	-	143	29	-	-	-	-	-	-	-
Time blocked-Platoon, %								-	-		-	-
Mov Capacity-1 Maneuver	4	1	109	17	1	364	46	-	-	293	-	-
Mov Capacity-2 Maneuver	4	1	-	17	1	-	-	-	-	-	-	-
Stage 1	5	19	-	110	200	-	-	-	-	-	-	-
Stage 2	381	196	-	91	19	-	-	-	-	-	-	-

Approach	EB	WB	NB	SB
HCM Control Delay, s	38.4	93	0.6	0.9
HCM LOS	E	F		

Minor Lane / Major Mvmt	NBL	NBT	NBR	EBLn1	WBLn1	WBLn2	SBL	SBT	SBR
Capacity (veh/h)	46	-	-	109	30	364	293	-	-
HCM Lane V/C Ratio	0.165	-	-	0.01	0.266	0.02	0.36	-	-
HCM Control Delay (s)	98.179	-	-	38.4	163.9	15.1	24.035	-	-
HCM Lane LOS	F			E	F	C	C		
HCM 95th %tile Q(veh)	0.535	-	-	0.03	0.833	0.061	1.58	-	-

Notes

~ : Volume Exceeds Capacity; $: Delay Exceeds 300 Seconds; Error : Computation Not Defined

Intersection	
Intersection Delay, s/veh	2.4

Movement	EBL	EBT	WBT	WBR	SBL	SBR
Vol, veh/h	1	47	13	6	21	2
Conflicting Peds, #/hr	0	0	0	0	0	0
Sign Control	Free	Free	Free	Free	Stop	Stop
RT Channelized	-	None	-	None	-	None
Storage Length	-	-	-	-	0	-
Veh in Median Storage, #	-	0	0	-	0	-
Grade, %	-	0	0	-	0	-
Peak Hour Factor	92	92	92	92	92	92
Heavy Vehicles, %	2	2	2	2	2	2
Mvmt Flow	1	51	14	7	23	2

Major/Minor	Major1		Major2		Minor2	
Conflicting Flow All	21	0	-	0	70	17
Stage 1	-	-	-	-	17	-
Stage 2	-	-	-	-	53	-
Follow-up Headway	2.218	-	-	-	3.518	3.318
Pot Capacity-1 Maneuver	1595	-	-	-	934	1062
Stage 1	-	-	-	-	1006	-
Stage 2	-	-	-	-	970	-
Time blocked-Platoon, %		-	-	-		
Mov Capacity-1 Maneuver	1595	-	-	-	933	1062
Mov Capacity-2 Maneuver	-	-	-	-	933	-
Stage 1	-	-	-	-	1006	-
Stage 2	-	-	-	-	969	-

Approach	EB	WB	SB
HCM Control Delay, s	0.2	0	8.9
HCM LOS			A

Minor Lane / Major Mvmt	EBL	EBT	WBT	WBR	SBLn1
Capacity (veh/h)	1595	-	-	-	943
HCM Lane V/C Ratio	0.001	-	-	-	0.027
HCM Control Delay (s)	7.259	0	-	-	8.9
HCM Lane LOS	A	A			A
HCM 95th %tile Q(veh)	0.002	-	-	-	0.082

Notes

~ : Volume Exceeds Capacity; $: Delay Exceeds 300 Seconds; Error : Computation Not Defined

Intersection	
Intersection Delay, s/veh	4.6

Movement	EBL	EBT	WBT	WBR	SBL	SBR
Vol, veh/h	1	17	7	8	30	5
Conflicting Peds, #/hr	0	0	0	0	0	0
Sign Control	Free	Free	Free	Free	Stop	Stop
RT Channelized	-	None	-	None	-	None
Storage Length	-	-	-	-	0	-
Veh in Median Storage, #	-	0	0	-	0	-
Grade, %	-	0	0	-	0	-
Peak Hour Factor	92	92	92	92	92	92
Heavy Vehicles, %	2	2	2	2	2	2
Mvmt Flow	1	18	8	9	33	5

Major/Minor	Major1		Major2		Minor2	
Conflicting Flow All	16	0	-	0	33	12
Stage 1	-	-	-	-	12	-
Stage 2	-	-	-	-	21	-
Follow-up Headway	2.218	-	-	-	3.518	3.318
Pot Capacity-1 Maneuver	1602	-	-	-	980	1069
Stage 1	-	-	-	-	1011	-
Stage 2	-	-	-	-	1002	-
Time blocked-Platoon, %		-	-	-		
Mov Capacity-1 Maneuver	1602	-	-	-	979	1069
Mov Capacity-2 Maneuver	-	-	-	-	979	-
Stage 1	-	-	-	-	1011	-
Stage 2	-	-	-	-	1001	-

Approach	EB	WB	SB
HCM Control Delay, s	0.4	0	8.8
HCM LOS			A

Minor Lane / Major Mvmt	EBL	EBT	WBT	WBR	SBLn1
Capacity (veh/h)	1602	-	-	-	991
HCM Lane V/C Ratio	0.001	-	-	-	0.038
HCM Control Delay (s)	7.249	0	-	-	8.8
HCM Lane LOS	A	A			A
HCM 95th %tile Q(veh)	0.002	-	-	-	0.12

Notes

~ : Volume Exceeds Capacity; $: Delay Exceeds 300 Seconds; Error : Computation Not Defined

Intersection	
Intersection Delay, s/veh	5.4

Movement	EBL	EBT	WBT	WBR	SBL	SBR
Vol, veh/h	1	2	7	4	16	5
Conflicting Peds, #/hr	0	0	0	0	0	0
Sign Control	Free	Free	Free	Free	Stop	Stop
RT Channelized	-	None	-	None	-	None
Storage Length	-	-	-	-	0	-
Veh in Median Storage, #	-	0	0	-	0	-
Grade, %	-	0	0	-	0	-
Peak Hour Factor	92	92	92	92	92	92
Heavy Vehicles, %	2	2	2	2	2	2
Mvmt Flow	1	2	8	4	17	5

Major/Minor	Major1		Major2		Minor2	
Conflicting Flow All	12	0	-	0	14	10
Stage 1	-	-	-	-	10	-
Stage 2	-	-	-	-	4	-
Follow-up Headway	2.218	-	-	-	3.518	3.318
Pot Capacity-1 Maneuver	1607	-	-	-	1005	1071
Stage 1	-	-	-	-	1013	-
Stage 2	-	-	-	-	1019	-
Time blocked-Platoon, %		-	-	-		
Mov Capacity-1 Maneuver	1607	-	-	-	1004	1071
Mov Capacity-2 Maneuver	-	-	-	-	1004	-
Stage 1	-	-	-	-	1013	-
Stage 2	-	-	-	-	1018	-

Approach	EB	WB	SB
HCM Control Delay, s	2.4	0	8.6
HCM LOS			A

Minor Lane / Major Mvmt	EBL	EBT	WBT	WBR	SBLn1
Capacity (veh/h)	1607	-	-	-	1019
HCM Lane V/C Ratio	0.001	-	-	-	0.022
HCM Control Delay (s)	7.242	0	-	-	8.6
HCM Lane LOS	A	A			A
HCM 95th %tile Q(veh)	0.002	-	-	-	0.069

Notes

~ : Volume Exceeds Capacity; $: Delay Exceeds 300 Seconds; Error : Computation Not Defined

Two Way Analysis cannot be performed on an All Way Stop Intersection.

Intersection	
Intersection Delay, s/veh	0.7

Movement	EBL	EBT	EBR	WBL	WBT	WBR	NBL	NBT	NBR	SBL	SBT	SBR
Vol, veh/h	16	1706	3	16	1154	3	0	0	47	0	0	2
Conflicting Peds, #/hr	0	0	0	0	0	0	0	0	0	0	0	0
Sign Control	Free	Free	Free	Free	Free	Free	Stop	Stop	Stop	Stop	Stop	Stop
RT Channelized	-	-	None	-	-	None	-	-	None	-	-	None
Storage Length	160	-	160	175	-	-	-	-	0	-	-	0
Veh in Median Storage, #	-	0	-	-	0	-	-	0	-	-	0	-
Grade, %	-	0	-	-	0	-	-	0	-	-	0	-
Peak Hour Factor	92	92	92	92	92	92	92	92	92	92	92	92
Heavy Vehicles, %	2	2	2	2	2	2	2	2	2	2	2	2
Mvmt Flow	17	1854	3	17	1254	3	0	0	51	0	0	2

Major/Minor	Major1			Major2			Minor1			Minor2		
Conflicting Flow All	1258	0	0	1854	0	0	2426	3181	927	2068	3180	629
Stage 1	-	-	-	-	-	-	1889	1889	-	1291	1291	-
Stage 2	-	-	-	-	-	-	537	1292	-	777	1889	-
Follow-up Headway	3.12	-	-	3.12	-	-	3.82	4.02	3.92	3.82	4.02	3.92
Pot Capacity-1 Maneuver	293	-	-	148	-	-	34	10	232	58	10	364
Stage 1	-	-	-	-	-	-	46	117	-	124	232	-
Stage 2	-	-	-	-	-	-	452	232	-	323	117	-
Time blocked-Platoon, %		-	-		-	-						
Mov Capacity-1 Maneuver	293	-	-	148	-	-	29	8	232	39	8	364
Mov Capacity-2 Maneuver	-	-	-	-	-	-	29	8	-	39	8	-
Stage 1	-	-	-	-	-	-	43	110	-	117	205	-
Stage 2	-	-	-	-	-	-	398	205	-	237	110	-

Approach	EB	WB	NB	SB
HCM Control Delay, s	0.2	0.4	24.8	15
HCM LOS			C	C

Minor Lane / Major Mvmt	NBLn1	EBL	EBT	EBR	WBL	WBT	WBR	SBLn1
Capacity (veh/h)	232	293	-	-	148	-	-	364
HCM Lane V/C Ratio	0.22	0.059	-	-	0.118	-	-	0.006
HCM Control Delay (s)	24.8	18.061	-	-	32.537	-	-	15
HCM Lane LOS	C	C			D			C
HCM 95th %tile Q(veh)	0.818	0.188	-	-	0.39	-	-	0.018

Notes

~ : Volume Exceeds Capacity; $: Delay Exceeds 300 Seconds; Error : Computation Not Defined

Intersection	
Intersection Delay, s/veh	8.4
Intersection LOS	A

Movement	EBL	EBT	EBR	WBL	WBT	WBR	NBL	NBT	NBR	SBL	SBT	SBR
Vol, veh/h	10	19	1	24	16	45	0	79	53	91	88	3
Peak Hour Factor	0.92	0.92	0.92	0.92	0.92	0.92	0.92	0.92	0.92	0.92	0.92	0.92
Heavy Vehicles, %	2	2	2	2	2	2	2	2	2	2	2	2
Mvmt Flow	11	21	1	26	17	49	0	86	58	99	96	3
Number of Lanes	0	1	0	0	1	0	0	1	0	0	1	0

Approach	EB	WB	NB	SB
Opposing Approach	WB	EB	SB	NB
Opposing Lanes	1	1	1	1
Conflicting Approach Left	SB	NB	EB	WB
Conflicting Lanes Left	1	1	1	1
Conflicting Approach Right	NB	SB	WB	EB
Conflicting Lanes Right	1	1	1	1
HCM Control Delay	8.1	8.1	8.1	8.9
HCM LOS	A	A	A	A

Lane	NBLn1	EBLn1	WBLn1	SBLn1
Vol Left, %	0%	33%	28%	50%
Vol Thru, %	60%	63%	19%	48%
Vol Right, %	40%	3%	53%	2%
Sign Control	Stop	Stop	Stop	Stop
Traffic Vol by Lane	132	30	85	182
LT Vol	79	19	16	88
Through Vol	53	1	45	3
RT Vol	0	10	24	91
Lane Flow Rate	143	33	92	198
Geometry Grp	1	1	1	1
Degree of Util (X)	0.168	0.044	0.115	0.245
Departure Headway (Hd)	4.203	4.855	4.474	4.466
Convergence, Y/N	Yes	Yes	Yes	Yes
Cap	855	738	802	805
Service Time	2.222	2.883	2.498	2.485
HCM Lane V/C Ratio	0.167	0.045	0.115	0.246
HCM Control Delay	8.1	8.1	8.1	8.9
HCM Lane LOS	A	A	A	A
HCM 95th-tile Q	0.6	0.1	0.4	1

Notes

~ : Volume Exceeds Capacity; $: Delay Exceeds 300 Seconds; Error : Computation Not Defined

HCM 2010 Signalized Intersection Summary
4278: Midway Rd & Lindbergh Dr

7/20/2015

Movement	EBL	EBT	EBR	WBL	WBT	WBR	NBL	NBT	NBR	SBL	SBT	SBR
Lane Configurations												
Volume (veh/h)	65	35	48	60	19	207	31	2193	92	241	2041	39
Number	3	8	18	7	4	14	1	6	16	5	2	12
Initial Q (Qb), veh	0	0	0	0	0	0	0	0	0	0	0	0
Ped-Bike Adj(A_pbT)	1.00		1.00	1.00		1.00	1.00		1.00	1.00		1.00
Parking Bus Adj	1.00	1.00	1.00	1.00	1.00	1.00	1.00	1.00	1.00	1.00	1.00	1.00
Adj Sat Flow veh/h/ln	186.3	186.3	190.0	186.3	193.7	186.3	186.3	186.3	190.0	186.3	186.3	190.0
Lanes	1	1	0	1	1	1	1	3	0	1	3	0
Cap, veh/h	362	125	189	324	358	293	150	2843	127	359	3442	66
Arrive On Green	0.07	0.19	0.18	0.07	0.18	0.18	0.08	1.00	1.00	0.13	0.63	0.62
Sat Flow, veh/h	1774	668	1016	1774	1937	1583	1774	5308	238	1774	5465	105
Grp Volume(v), veh/h	96	0	121	92	25	252	48	1599	788	317	1736	864
Grp Sat Flow(s),veh/h/ln	1774	0	1684	1774	1937	1583	1774	1863	1821	1774	1863	1844
Q Serve(g_s), s	6.7	0.0	9.9	6.4	1.7	24.2	1.8	0.0	0.0	16.2	50.6	51.3
Cycle Q Clear(g_c), s	6.7	0.0	9.9	6.4	1.7	24.2	1.8	0.0	0.0	16.2	50.6	51.3
Prop In Lane	1.00		0.60	1.00		1.00	1.00		0.13	1.00		0.06
Lane Grp Cap(c), veh/h	362	0	314	324	358	293	150	1995	975	359	2346	1161
V/C Ratio(X)	0.26	0.00	0.39	0.28	0.07	0.86	0.32	0.80	0.81	0.88	0.74	0.74
Avail Cap(c_a), veh/h	373	0	314	360	383	313	206	1995	975	362	2346	1161
HCM Platoon Ratio	1.00	1.00	1.00	1.00	1.00	1.00	2.00	2.00	2.00	1.00	1.00	1.00
Upstream Filter(I)	1.00	0.00	1.00	1.00	1.00	1.00	1.00	1.00	1.00	1.00	1.00	1.00
Uniform Delay (d), s/veh	45.8	0.0	56.3	46.4	52.8	61.9	20.7	0.0	0.0	38.7	20.1	20.3
Incr Delay (d2), s/veh	0.4	0.0	0.8	0.5	0.1	20.0	1.2	3.5	7.2	21.6	2.1	4.3
Initial Q Delay(d3),s/veh	0.0	0.0	0.0	0.0	0.0	0.0	0.0	0.0	0.0	0.0	0.0	0.0
%ile Back of Q (50%), veh/ln	3.1	0.0	4.5	3.0	0.9	11.6	0.8	1.0	1.9	15.1	23.1	24.0
Lane Grp Delay (d), s/veh	46.2	0.0	57.1	46.8	52.8	81.9	22.0	3.5	7.2	60.2	22.3	24.6
Lane Grp LOS	D		E	D	D	F	C	A	A	E	C	C
Approach Vol, veh/h		217			369			2435			2917	
Approach Delay, s/veh		52.3			71.2			5.1			27.1	
Approach LOS		D			E			A			C	

Timer												
Assigned Phs	3	8		7	4		1	6		5	2	
Phs Duration (G+Y+Rc), s	14.1	32.3		13.8	32.0		9.0	87.0		23.8	101.8	
Change Period (Y+Rc), s	5.5	5.5		5.5	5.5		5.5	5.5		5.5	5.5	
Max Green Setting (Gmax), s	9.5	26.5		11.5	28.5		8.5	81.5		18.5	91.5	
Max Q Clear Time (g_c+I1), s	8.7	11.9		8.4	26.2		3.8	2.0		18.2	53.3	
Green Ext Time (p_c), s	0.0	1.5		0.1	0.3		0.0	70.1		0.0	35.9	

Intersection Summary			
HCM 2010 Ctrl Delay			21.7
HCM 2010 LOS			C

Notes

HCM 2010 Signalized Intersection Summary
4287: Beltway Dr & Beltline Rd

7/20/2015

Movement	EBU	EBT	EBR	WBL	WBT	NBL	NBR
Lane Configurations							
Volume (veh/h)	18	1946	30	95	2065	30	221
Number		6	16	5	2	7	14
Initial Q (Qb), veh		0	0	0	0	0	0
Ped-Bike Adj(A_pbT)			1.00	1.00		1.00	1.00
Parking Bus Adj		1.00	1.00	1.00	1.00	1.00	1.00
Adj Sat Flow veh/h/ln		186.3	190.0	186.3	186.3	186.3	186.3
Lanes		3	0	1	3	1	2
Cap, veh/h		4111	80	177	4671	214	383
Arrive On Green		0.75	0.74	0.06	0.84	0.12	0.12
Sat Flow, veh/h		5463	106	1774	5588	1774	3167
Grp Volume(v), veh/h		1367	678	122	2129	48	260
Grp Sat Flow(s),veh/h/ln		1863	1844	1774	1863	1774	1583
Q Serve(g_s), s		19.8	19.9	3.9	14.0	3.4	10.9
Cycle Q Clear(g_c), s		19.8	19.9	3.9	14.0	3.4	10.9
Prop In Lane			0.06	1.00		1.00	1.00
Lane Grp Cap(c), veh/h		2803	1387	177	4671	214	383
V/C Ratio(X)		0.49	0.49	0.69	0.46	0.22	0.68
Avail Cap(c_a), veh/h		2803	1387	260	4671	411	733
HCM Platoon Ratio		1.00	1.00	1.00	1.00	1.00	1.00
Upstream Filter(I)		1.00	1.00	1.00	1.00	1.00	1.00
Uniform Delay (d), s/veh		6.7	6.7	53.1	3.0	54.9	58.2
Incr Delay (d2), s/veh		0.6	1.2	4.7	0.3	0.5	2.1
Initial Q Delay(d3),s/veh		0.0	0.0	0.0	0.0	0.0	0.0
%ile Back of Q (50%), veh/ln		8.0	8.2	4.6	4.5	1.6	0.1
Lane Grp Delay (d), s/veh		7.3	8.0	57.7	3.3	55.4	60.3
Lane Grp LOS		A	A	E	A	E	E
Approach Vol, veh/h		2045			2251	308	
Approach Delay, s/veh		7.5			6.3	59.6	
Approach LOS		A			A	E	

Timer							
Assigned Phs		6		5	2		
Phs Duration (G+Y+Rc), s		107.0		11.5	118.5		
Change Period (Y+Rc), s		5.5		5.5	5.5		
Max Green Setting (Gmax), s		101.5		12.5	106.5		
Max Q Clear Time (g_c+I1), s		21.9		5.9	16.0		
Green Ext Time (p_c), s		59.7		0.2	65.6		

Intersection Summary			
HCM 2010 Ctrl Delay			10.4
HCM 2010 LOS			B

Notes

HCM 2010 Signalized Intersection Summary
4288: Midway Rd & Beltline Rd

7/20/2015

Movement	EBL	EBT	EBR	WBL	WBT	WBR	NBL	NBT	NBR	SBL	SBT	SBR
Lane Configurations												
Volume (veh/h)	207	1321	315	373	1179	435	310	1674	385	401	1253	182
Number	1	6	16	5	2	12	7	4	14	3	8	18
Initial Q (Qb), veh	0	0	0	0	0	0	0	0	0	0	0	0
Ped-Bike Adj(A_pbT)	1.00		1.00	1.00		1.00	1.00		1.00	1.00		1.00
Parking Bus Adj	1.00	1.00	1.00	1.00	1.00	1.00	1.00	1.00	1.00	1.00	1.00	1.00
Adj Sat Flow veh/h/ln	186.3	186.3	186.3	186.3	186.3	190.0	186.3	186.3	186.3	186.3	186.3	186.3
Lanes	2	3	1	2	3	0	2	3	1	2	3	1
Cap, veh/h	409	1921	544	409	1328	504	581	1921	544	409	1642	465
Arrive On Green	0.16	0.46	0.46	0.12	0.34	0.33	0.22	0.46	0.00	0.24	0.59	0.00
Sat Flow, veh/h	3442	5588	1583	3442	3865	1465	3442	5588	1583	3442	5588	1583
Grp Volume(v), veh/h	351	1391	399	381	1236	535	356	1840	0	427	1474	0
Grp Sat Flow(s),veh/h/ln	1721	1863	1583	1721	1863	1604	1721	1863	1583	1721	1863	1583
Q Serve(g_s), s	15.9	32.3	32.9	17.6	52.1	52.6	14.9	50.9	0.0	19.0	36.8	0.0
Cycle Q Clear(g_c), s	15.9	32.3	32.9	17.6	52.1	52.6	14.9	50.9	0.0	19.0	36.8	0.0
Prop In Lane	1.00		1.00	1.00		0.91	1.00		1.00	1.00		1.00
Lane Grp Cap(c), veh/h	409	1921	544	409	1281	551	581	1921	544	409	1642	465
V/C Ratio(X)	0.86	0.72	0.73	0.93	0.96	0.97	0.61	0.96	0.00	1.04	0.90	0.00
Avail Cap(c_a), veh/h	409	1921	544	409	1281	551	581	1921	544	409	1642	465
HCM Platoon Ratio	1.33	1.33	1.33	1.00	1.00	1.00	1.33	1.33	1.33	2.00	2.00	2.00
Upstream Filter(I)	1.00	1.00	1.00	1.00	1.00	1.00	1.00	1.00	0.00	1.00	1.00	0.00
Uniform Delay (d), s/veh	66.1	37.3	37.4	69.9	51.5	52.6	57.3	42.3	0.0	61.0	30.9	0.0
Incr Delay (d2), s/veh	20.3	2.4	8.5	30.4	18.0	31.8	4.8	12.7	0.0	56.7	8.2	0.0
Initial Q Delay(d3),s/veh	0.0	0.0	0.0	0.0	0.0	0.0	0.0	0.0	0.0	0.0	0.0	0.0
%ile Back of Q (50%), veh/ln	8.0	14.7	13.7	9.6	27.7	26.4	6.8	24.8	0.0	10.9	14.9	0.0
Lane Grp Delay (d), s/veh	86.4	39.7	45.9	100.2	69.6	84.4	62.1	55.0	0.0	117.7	39.1	0.0
Lane Grp LOS	F	D	D	F	E	F	E	E		F	D	
Approach Vol, veh/h		2141			2152			2196			1901	
Approach Delay, s/veh		48.5			78.7			56.2			56.7	
Approach LOS		D			E			E			E	

Timer												
Assigned Phs	1	6		5	2		7	4		3	8	
Phs Duration (G+Y+Rc), s	22.0	58.0		22.0	58.0		30.0	58.0		22.0	50.0	
Change Period (Y+Rc), s	6.0	6.0		6.0	6.0		6.0	6.0		6.0	6.0	
Max Green Setting (Gmax), s	16.0	52.0		16.0	52.0		24.0	52.0		16.0	44.0	
Max Q Clear Time (g_c+I1), s	17.9	34.9		19.6	54.6		16.9	52.9		21.0	38.8	
Green Ext Time (p_c), s	0.0	10.1		0.0	0.0		0.9	0.0		0.0	3.8	

Intersection Summary	
HCM 2010 Ctrl Delay	60.1
HCM 2010 LOS	E

Notes

HCM 2010 Signalized Intersection Summary
4289: Midway Rd & Beltway Dr

7/20/2015

Movement	EBL	EBT	EBR	WBL	WBT	WBR	NBL	NBT	NBR	SBL	SBT	SBR
Lane Configurations												
Volume (veh/h)	49	38	112	69	53	66	157	2333	105	56	1850	90
Number	3	8	18	7	4	14	1	6	16	5	2	12
Initial Q (Qb), veh	0	0	0	0	0	0	0	0	0	0	0	0
Ped-Bike Adj(A_pbT)	1.00		1.00	1.00		1.00	1.00		1.00	1.00		1.00
Parking Bus Adj	1.00	1.00	1.00	1.00	1.00	1.00	1.00	1.00	1.00	1.00	1.00	1.00
Adj Sat Flow veh/h/ln	186.3	193.7	186.3	186.3	193.7	190.0	186.3	186.3	186.3	186.3	193.7	186.3
Lanes	1	1	1	1	1	0	1	3	1	1	3	1
Cap, veh/h	247	255	208	329	107	139	271	3592	1018	180	3639	991
Arrive On Green	0.07	0.13	0.13	0.08	0.14	0.13	0.04	0.43	0.43	0.10	1.00	1.00
Sat Flow, veh/h	1774	1937	1583	1774	767	995	1774	5588	1583	1774	5812	1583
Grp Volume(v), veh/h	88	55	140	105	0	170	160	2405	138	72	2202	111
Grp Sat Flow(s),veh/h/ln	1774	1937	1583	1774	0	1762	1774	1863	1583	1774	1937	1583
Q Serve(g_s), s	5.3	3.2	10.7	6.2	0.0	11.7	3.5	43.9	6.7	1.7	0.0	0.0
Cycle Q Clear(g_c), s	5.3	3.2	10.7	6.2	0.0	11.7	3.5	43.9	6.7	1.7	0.0	0.0
Prop In Lane	1.00		1.00	1.00		0.56	1.00		1.00	1.00		1.00
Lane Grp Cap(c), veh/h	247	255	208	329	0	247	271	3592	1018	180	3639	991
V/C Ratio(X)	0.36	0.22	0.67	0.32	0.00	0.69	0.59	0.67	0.14	0.40	0.61	0.11
Avail Cap(c_a), veh/h	295	638	521	363	0	580	378	3592	1018	247	3639	991
HCM Platoon Ratio	1.00	1.00	1.00	1.00	1.00	1.00	0.67	0.67	0.67	2.00	2.00	2.00
Upstream Filter(I)	1.00	1.00	1.00	1.00	0.00	1.00	1.00	1.00	1.00	1.00	1.00	1.00
Uniform Delay (d), s/veh	42.8	49.5	52.8	41.0	0.0	52.6	8.9	25.5	14.9	20.5	0.0	0.0
Incr Delay (d2), s/veh	0.9	0.4	3.7	0.6	0.0	3.4	2.1	1.0	0.3	1.4	0.8	0.2
Initial Q Delay(d3),s/veh	0.0	0.0	0.0	0.0	0.0	0.0	0.0	0.0	0.0	0.0	0.0	0.0
%ile Back of Q (50%), veh/ln	2.5	1.7	4.6	2.9	0.0	5.6	1.8	21.3	2.8	2.2	0.3	0.1
Lane Grp Delay (d), s/veh	43.6	49.9	56.5	41.5	0.0	56.0	10.9	26.5	15.2	22.0	0.8	0.2
Lane Grp LOS	D	D	E	D		E	B	C	B	C	A	A
Approach Vol, veh/h		283			275			2703			2385	
Approach Delay, s/veh		51.2			50.5			25.0			1.4	
Approach LOS		D			D			C			A	

Timer												
Assigned Phs	3	8		7	4		1	6		5	2	
Phs Duration (G+Y+Rc), s	12.5	19.8		13.6	20.9		11.3	85.0		9.2	82.9	
Change Period (Y+Rc), s	5.5	5.5		5.5	5.5		5.5	5.5		5.5	5.5	
Max Green Setting (Gmax), s	10.5	39.5		10.5	39.5		13.5	79.5		8.5	74.5	
Max Q Clear Time (g_c+I1), s	7.3	12.7		8.2	13.7		5.5	45.9		3.7	2.0	
Green Ext Time (p_c), s	0.1	1.5		0.1	1.5		0.3	31.8		0.1	64.7	

Intersection Summary	
HCM 2010 Ctrl Delay	17.6
HCM 2010 LOS	B

Notes

HCM 2010 Signalized Intersection Summary
4290: Midway Rd & Proton Dr

7/20/2015

Movement	EBL	EBT	EBR	WBL	WBT	WBR	NBL	NBT	NBR	SBL	SBT	SBR
Lane Configurations												
Volume (veh/h)	97	5	82	7	25	105	130	2248	9	47	1908	73
Number	3	8	18	7	4	14	1	6	16	5	2	12
Initial Q (Qb), veh	0	0	0	0	0	0	0	0	0	0	0	0
Ped-Bike Adj(A_pbT)	1.00		1.00	1.00		1.00	1.00		1.00	1.00		1.00
Parking Bus Adj	1.00	1.00	1.00	1.00	1.00	1.00	1.00	1.00	1.00	1.00	1.00	1.00
Adj Sat Flow veh/h/ln	186.3	193.7	190.0	190.0	186.3	186.3	186.3	186.3	190.0	186.3	186.3	190.0
Lanes	1	1	0	0	1	1	1	3	0	1	3	0
Cap, veh/h	320	42	329	52	172	173	240	3710	21	180	3506	139
Arrive On Green	0.09	0.22	0.22	0.11	0.11	0.11	0.06	0.67	0.66	0.09	1.00	1.00
Sat Flow, veh/h	1774	191	1484	194	1579	1583	1774	5552	31	1774	5340	211
Grp Volume(v), veh/h	123	0	114	46	0	114	134	1694	846	63	1659	821
Grp Sat Flow(s),veh/h/ln	1774	0	1675	1773	0	1583	1774	1863	1857	1774	1863	1825
Q Serve(g_s), s	8.1	0.0	7.8	0.0	0.0	9.5	3.1	38.1	38.2	1.5	0.0	0.0
Cycle Q Clear(g_c), s	8.1	0.0	7.8	3.1	0.0	9.5	3.1	38.1	38.2	1.5	0.0	0.0
Prop In Lane	1.00		0.89	0.20		1.00	1.00		0.02	1.00		0.12
Lane Grp Cap(c), veh/h	320	0	372	225	0	173	240	2489	1241	180	2446	1198
V/C Ratio(X)	0.38	0.00	0.31	0.20	0.00	0.66	0.56	0.68	0.68	0.35	0.68	0.69
Avail Cap(c_a), veh/h	352	0	584	410	0	345	333	2489	1241	243	2446	1198
HCM Platoon Ratio	1.00	1.00	1.00	1.00	1.00	1.00	1.00	1.00	1.00	2.00	2.00	2.00
Upstream Filter(I)	1.00	0.00	1.00	1.00	0.00	1.00	1.00	1.00	1.00	1.00	1.00	1.00
Uniform Delay (d), s/veh	45.7	0.0	44.7	56.0	0.0	58.9	7.1	13.9	13.9	15.0	0.0	0.0
Incr Delay (d2), s/veh	0.8	0.0	0.5	0.4	0.0	4.3	2.0	1.5	3.0	1.2	1.5	3.2
Initial Q Delay(d3),s/veh	0.0	0.0	0.0	0.0	0.0	0.0	0.0	0.0	0.0	0.0	0.0	0.0
%ile Back of Q (50%), veh/ln	3.8	0.0	3.5	1.5	0.0	4.1	1.4	16.3	16.8	0.9	0.5	1.1
Lane Grp Delay (d), s/veh	46.5	0.0	45.2	56.5	0.0	63.2	9.1	15.4	17.0	16.1	1.5	3.2
Lane Grp LOS	D		D	E		E	A	B	B	B	A	A
Approach Vol, veh/h		237			160			2674			2543	
Approach Delay, s/veh		45.9			61.2			15.6			2.4	
Approach LOS		D			E			B			A	

Timer												
Assigned Phs	3	8			4		1	6		5	2	
Phs Duration (G+Y+Rc), s	15.5	33.6			18.0		10.7	95.0		9.1	93.4	
Change Period (Y+Rc), s	5.5	5.5			5.5		5.5	5.5		5.5	5.5	
Max Green Setting (Gmax), s	12.5	45.5			27.5		12.5	89.5		8.5	85.5	
Max Q Clear Time (g_c+I1), s	10.1	9.8			11.5		5.1	40.2		3.5	2.0	
Green Ext Time (p_c), s	0.1	1.2			1.0		0.2	45.5		0.1	73.3	

Intersection Summary												
HCM 2010 Ctrl Delay			12.2									
HCM 2010 LOS			B									

Notes

HCM 2010 Signalized Intersection Summary
4295: Runyon Rd & Beltline Rd

7/20/2015

Movement	EBL	EBT	EBR	WBL	WBT	WBR	NBL	NBT	NBR	SBL	SBT	SBR
Lane Configurations												
Volume (veh/h)	18	1867	42	89	1492	12	99	1	50	20	1	25
Number	1	6	16	5	2	12	7	4	14	3	8	18
Initial Q (Qb), veh	0	0	0	0	0	0	0	0	0	0	0	0
Ped-Bike Adj(A_pbT)	1.00		1.00	1.00		1.00	1.00		1.00	1.00		1.00
Parking Bus Adj	1.00	1.00	1.00	1.00	1.00	1.00	1.00	1.00	1.00	1.00	1.00	1.00
Adj Sat Flow veh/h/ln	186.3	186.3	186.3	186.3	186.3	190.0	186.3	186.3	190.0	186.3	186.3	190.0
Lanes	1	3	1	1	3	0	2	1	0	1	1	0
Cap, veh/h	327	3898	1104	295	3943	39	504	6	163	184	13	113
Arrive On Green	0.06	0.93	0.93	0.12	1.00	1.00	0.07	0.11	0.09	0.04	0.08	0.07
Sat Flow, veh/h	1774	5588	1583	1774	5524	55	3442	58	1534	1774	165	1443
Grp Volume(v), veh/h	41	1965	76	168	1157	575	148	0	110	36	0	39
Grp Sat Flow(s),veh/h/ln	1774	1863	1583	1774	1863	1853	1721	0	1592	1774	0	1608
Q Serve(g_s), s	0.8	6.2	0.5	3.1	0.0	0.0	4.7	0.0	8.6	2.3	0.0	3.0
Cycle Q Clear(g_c), s	0.8	6.2	0.5	3.1	0.0	0.0	4.7	0.0	8.6	2.3	0.0	3.0
Prop In Lane	1.00		1.00	1.00		0.03	1.00		0.96	1.00		0.90
Lane Grp Cap(c), veh/h	327	3898	1104	295	2660	1323	504	0	169	184	0	126
V/C Ratio(X)	0.13	0.50	0.07	0.57	0.43	0.43	0.29	0.00	0.65	0.20	0.00	0.31
Avail Cap(c_a), veh/h	388	3898	1104	327	2660	1323	525	0	444	271	0	474
HCM Platoon Ratio	1.33	1.33	1.33	2.00	2.00	2.00	1.00	1.00	1.00	1.00	1.00	1.00
Upstream Filter(I)	0.79	0.79	0.79	1.00	1.00	1.00	1.00	0.00	1.00	1.00	0.00	1.00
Uniform Delay (d), s/veh	4.4	1.6	1.4	4.5	0.0	0.0	44.2	0.0	56.1	50.8	0.0	56.8
Incr Delay (d2), s/veh	0.1	0.4	0.1	1.9	0.5	1.0	0.3	0.0	4.2	0.5	0.0	1.4
Initial Q Delay(d3),s/veh	0.0	0.0	0.0	0.0	0.0	0.0	0.0	0.0	0.0	0.0	0.0	0.0
%ile Back of Q (50%), veh/ln	0.3	1.6	0.2	1.0	0.2	0.4	2.1	0.0	3.8	1.1	0.0	1.3
Lane Grp Delay (d), s/veh	4.5	2.0	1.5	6.4	0.5	1.0	44.6	0.0	60.3	51.3	0.0	58.1
Lane Grp LOS	A	A	A	A	A	A	D		E	D		E
Approach Vol, veh/h		2082			1900			258			75	
Approach Delay, s/veh		2.0			1.2			51.3			54.9	
Approach LOS		A			A			D			D	

Timer												
Assigned Phs	1	6		5	2		7	4		3	8	
Phs Duration (G+Y+Rc), s	8.6	93.0		10.7	95.1		12.2	16.7		8.7	13.1	
Change Period (Y+Rc), s	5.5	5.5		5.5	5.5		5.5	5.5		5.5	5.5	
Max Green Setting (Gmax), s	7.5	87.5		7.5	87.5		7.5	33.5		9.5	35.5	
Max Q Clear Time (g_c+I1), s	2.8	8.2		5.1	2.0		6.7	10.6		4.3	5.0	
Green Ext Time (p_c), s	0.0	50.9		0.1	53.2		0.0	0.6		0.0	0.6	

Intersection Summary												
HCM 2010 Ctrl Delay			5.5									
HCM 2010 LOS			A									

Notes

Lane Group	EBL	EBT	EBR	WBL	WBT	WBR	NBL	NBT	NBR	SBL	SBT	SBR
Lane Configurations												
Volume (vph)	124	1589	57	60	1528	49	86	139	105	69	144	173
Ideal Flow (vphpl)	1900	1900	1900	1900	1900	1900	1900	1900	1900	1900	1900	1900
Storage Length (ft)	150		0	200		0	100		140	100		120
Storage Lanes	1		0	1		0	1		1	1		0
Taper Length (ft)	25			25			25			25		
Lane Util. Factor	1.00	0.91	0.91	1.00	0.91	0.91	1.00	1.00	1.00	1.00	1.00	1.00
Frt		0.993			0.995				0.850			0.850
Flt Protected	0.950			0.950			0.950			0.950		
Satd. Flow (prot)	1770	5050	0	1770	5060	0	1770	1863	1583	1770	1863	1583
Flt Permitted	0.058			0.090			0.290			0.471		
Satd. Flow (perm)	108	5050	0	168	5060	0	540	1863	1583	877	1863	1583
Right Turn on Red			Yes			Yes			Yes			Yes
Satd. Flow (RTOR)		7			5				170			254
Link Speed (mph)		40			40			30			30	
Link Distance (ft)		907			950			997			322	
Travel Time (s)		15.5			16.2			22.7			7.3	
Peak Hour Factor	0.59	0.94	0.68	0.90	0.89	0.86	0.89	0.94	0.90	0.73	0.91	0.68
Adj. Flow (vph)	210	1690	84	67	1717	57	97	148	117	95	158	254
Shared Lane Traffic (%)												
Lane Group Flow (vph)	210	1774	0	67	1774	0	97	148	117	95	158	254
Enter Blocked Intersection	No	No	No	No	No	No	No	No	No	No	No	No
Lane Alignment	Left	Left	Right	Left	Left	Right	Left	Left	Right	Left	Left	Right
Median Width(ft)		12			12			12			12	
Link Offset(ft)		0			0			0			0	
Crosswalk Width(ft)		16			16			16			16	
Two way Left Turn Lane												
Headway Factor	1.00	1.00	1.00	1.00	1.00	1.00	1.00	1.00	1.00	1.00	1.00	1.00
Turning Speed (mph)	15		9	15		9	15		9	15		9
Number of Detectors	1	1		1	1		1	1	1	1	1	1
Detector Template												
Leading Detector (ft)	50	50		50	50		50	50	50	50	50	50
Trailing Detector (ft)	0	0		0	0		0	0	0	0	0	0
Detector 1 Position(ft)	0	0		0	0		0	0	0	0	0	0
Detector 1 Size(ft)	50	50		50	50		50	50	50	50	50	50
Detector 1 Type	Cl+Ex	Cl+Ex		Cl+Ex	Cl+Ex		Cl+Ex	Cl+Ex	Cl+Ex	Cl+Ex	Cl+Ex	Cl+Ex
Detector 1 Channel												
Detector 1 Extend (s)	0.0	0.0		0.0	0.0		0.0	0.0	0.0	0.0	0.0	0.0
Detector 1 Queue (s)	0.0	0.0		0.0	0.0		0.0	0.0	0.0	0.0	0.0	0.0
Detector 1 Delay (s)	0.0	0.0		0.0	0.0		0.0	0.0	0.0	0.0	0.0	0.0
Turn Type	pm+pt	NA		pm+pt	NA		custom	NA	Perm	pm+pt	NA	custom
Protected Phases	1	6 14		13	2 10		15	4 12		11	8 16	
Permitted Phases	6 14			2 10			4		4 12	8 16		8
Detector Phase	1	6 14		13	2 10		15	4 12	4 12	11	8 16	8
Switch Phase												
Minimum Initial (s)	4.0			4.0			4.0			4.0		4.0
Minimum Split (s)	13.0			13.0			13.0			13.0		16.0
Total Split (s)	16.0			16.0			13.0			13.0		20.0
Total Split (%)	10.0%			10.0%			8.1%			8.1%		12.5%

Lane Group	ø2	ø4	ø6	ø10	ø12	ø14	ø16
Lane Configurations							
Volume (vph)							
Ideal Flow (vphpl)							
Storage Length (ft)							
Storage Lanes							
Taper Length (ft)							
Lane Util. Factor							
Frt							
Flt Protected							
Satd. Flow (prot)							
Flt Permitted							
Satd. Flow (perm)							
Right Turn on Red							
Satd. Flow (RTOR)							
Link Speed (mph)							
Link Distance (ft)							
Travel Time (s)							
Peak Hour Factor							
Adj. Flow (vph)							
Shared Lane Traffic (%)							
Lane Group Flow (vph)							
Enter Blocked Intersection							
Lane Alignment							
Median Width(ft)							
Link Offset(ft)							
Crosswalk Width(ft)							
Two way Left Turn Lane							
Headway Factor							
Turning Speed (mph)							
Number of Detectors							
Detector Template							
Leading Detector (ft)							
Trailing Detector (ft)							
Detector 1 Position(ft)							
Detector 1 Size(ft)							
Detector 1 Type							
Detector 1 Channel							
Detector 1 Extend (s)							
Detector 1 Queue (s)							
Detector 1 Delay (s)							
Turn Type							
Protected Phases	2	4	6	10	12	14	16
Permitted Phases							
Detector Phase							
Switch Phase							
Minimum Initial (s)	4.0	4.0	4.0	4.0	4.0	4.0	4.0
Minimum Split (s)	29.5	16.0	24.5	22.0	22.0	22.0	22.0
Total Split (s)	35.0	20.0	51.0	56.0	20.0	40.0	20.0
Total Split (%)	22%	13%	32%	35%	13%	25%	13%

Lane Group	EBL	EBT	EBR	WBL	WBT	WBR	NBL	NBT	NBR	SBL	SBT	SBR
Maximum Green (s)	10.5			10.5			7.5			7.5		14.5
Yellow Time (s)	3.5			3.5			3.5			3.5		3.5
All-Red Time (s)	2.0			2.0			2.0			2.0		2.0
Lost Time Adjust (s)	-2.5			-2.5			-3.0			-2.5		-2.5
Total Lost Time (s)	3.0			3.0			2.5			3.0		3.0
Lead/Lag	Lead			Lead			Lead			Lead		
Lead-Lag Optimize?	Yes			Yes			Yes			Yes		
Vehicle Extension (s)	3.0			3.0			3.0			3.0		3.0
Recall Mode	None			None			None			None		None
Walk Time (s)												5.0
Flash Dont Walk (s)												2.0
Pedestrian Calls (#/hr)												0
Act Effct Green (s)	92.0	92.0		88.7	88.7		24.1	30.4	30.4	40.3	30.4	13.3
Actuated g/C Ratio	0.58	0.58		0.55	0.55		0.15	0.19	0.19	0.25	0.19	0.08
v/c Ratio	1.07	0.61		0.35	0.63		0.60	0.42	0.27	0.35	0.45	0.70
Control Delay	127.0	12.4		20.0	13.0		56.8	32.9	2.1	26.7	33.5	18.1
Queue Delay	0.0	0.0		0.0	0.0		0.0	0.0	0.0	0.0	0.0	0.0
Total Delay	127.0	12.4		20.0	13.0		56.8	32.9	2.1	26.7	33.5	18.1
LOS	F	B		B	B		E	C	A	C	C	B
Approach Delay		24.6			13.2			29.3			24.5	
Approach LOS		C			B			C			C	

Intersection Summary	
Area Type:	Other
Cycle Length: 160	
Actuated Cycle Length: 160	
Offset: 117 (73%), Referenced to phase 2:WBTL and 6:EBTL, Start of 1st Green	
Natural Cycle: 130	
Control Type: Actuated-Coordinated	
Maximum v/c Ratio: 1.07	
Intersection Signal Delay: 20.5	Intersection LOS: C
Intersection Capacity Utilization 63.2%	ICU Level of Service B
Analysis Period (min) 15	

Splits and Phases: 4296: Surveyor Blvd & Beltline Rd

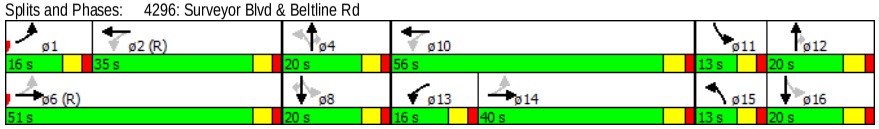

Lane Group	ø2	ø4	ø6	ø10	ø12	ø14	ø16
Maximum Green (s)	29.5	14.5	45.5	50.0	14.0	34.0	14.0
Yellow Time (s)	3.5	3.5	3.5	4.0	4.0	4.0	4.0
All-Red Time (s)	2.0	2.0	2.0	2.0	2.0	2.0	2.0
Lost Time Adjust (s)							
Total Lost Time (s)							
Lead/Lag	Lag				Lag	Lag	Lag
Lead-Lag Optimize?	Yes						
Vehicle Extension (s)	3.0	3.0	3.0	3.0	3.0	3.0	3.0
Recall Mode	C-Max	Min	C-Max	Max	Min	None	Max
Walk Time (s)	5.0	5.0	5.0	5.0	5.0	5.0	5.0
Flash Dont Walk (s)	19.0	24.0	14.0	11.0	11.0	11.0	11.0
Pedestrian Calls (#/hr)	0	0	0	0	0	0	0
Act Effct Green (s)							
Actuated g/C Ratio							
v/c Ratio							
Control Delay							
Queue Delay							
Total Delay							
LOS							
Approach Delay							
Approach LOS							

Intersection Summary

HCM 2010 TWSC
2: Northeast Drive & Beltline Rd

7/20/2015

Intersection	
Intersection Delay, s/veh	0.8

Movement	EBT	EBR	WBL	WBT	NBL	NBR
Vol, veh/h	1861	16	0	0	0	51
Conflicting Peds, #/hr	0	0	0	0	0	0
Sign Control	Free	Free	Free	Free	Stop	Stop
RT Channelized	-	None	-	None	-	None
Storage Length	-	140	-	-	-	0
Veh in Median Storage, #	0	-	-	0	0	-
Grade, %	0	-	-	0	0	-
Peak Hour Factor	92	92	92	92	92	92
Heavy Vehicles, %	2	2	2	2	2	2
Mvmt Flow	2023	17	0	0	0	55

Major/Minor	Major1		Major2		Minor1	
Conflicting Flow All	0	0	2023	0	2023	1011
Stage 1	-	-	-	-	2023	-
Stage 2	-	-	-	-	0	-
Follow-up Headway	-	-	3.12	-	3.82	3.92
Pot Capacity-1 Maneuver	-	-	122	-	91	204
Stage 1	-	-	-	-	55	-
Stage 2	-	-	-	-	-	-
Time blocked-Platoon, %	-	-		-		
Mov Capacity-1 Maneuver	-	-	122	-	91	204
Mov Capacity-2 Maneuver	-	-	-	-	91	-
Stage 1	-	-	-	-	55	-
Stage 2	-	-	-	-	-	-

Approach	EB	WB	NB
HCM Control Delay, s	0	0	29.1
HCM LOS			D

Minor Lane / Major Mvmt	NBLn1	EBT	EBR	WBL	WBT
Capacity (veh/h)	204	-	-	122	-
HCM Lane V/C Ratio	0.272	-	-	-	-
HCM Control Delay (s)	29.1	-	-	0	-
HCM Lane LOS	D			A	
HCM 95th %tile Q(veh)	1.059	-	-	0	-

Notes

~ : Volume Exceeds Capacity; $: Delay Exceeds 300 Seconds; Error : Computation Not Defined

HCM 2010 TWSC
4: Midway Rd & East Drive

7/20/2015

Intersection	
Intersection Delay, s/veh	0.8

Movement	EBL	EBR	NBL	NBT	SBT	SBR
Vol, veh/h	0	31	38	2392	2019	28
Conflicting Peds, #/hr	0	0	0	0	0	0
Sign Control	Stop	Stop	Free	Free	Free	Free
RT Channelized	-	None	-	None	-	None
Storage Length	-	0	125	-	-	-
Veh in Median Storage, #	0	-	-	0	0	-
Grade, %	0	-	-	0	0	-
Peak Hour Factor	92	92	92	92	92	92
Heavy Vehicles, %	2	2	2	2	2	2
Mvmt Flow	0	34	41	2600	2195	30

Major/Minor	Minor2		Major1		Major2	
Conflicting Flow All	3365	1113	2225	0	-	0
Stage 1	2242	-	-	-	-	-
Stage 2	1123	-	-	-	-	-
Follow-up Headway	3.82	3.92	3.12	-	-	-
Pot Capacity-1 Maneuver	16	174	96	-	-	-
Stage 1	40	-	-	-	-	-
Stage 2	245	-	-	-	-	-
Time blocked-Platoon, %				-	-	-
Mov Capacity-1 Maneuver	9	174	96	-	-	-
Mov Capacity-2 Maneuver	9	-	-	-	-	-
Stage 1	40	-	-	-	-	-
Stage 2	140	-	-	-	-	-

Approach	EB	NB	SB
HCM Control Delay, s	30.6	1.1	0
HCM LOS	D		

Minor Lane / Major Mvmt	NBL	NBT	EBLn1	SBU	SBT	SBR
Capacity (veh/h)	96	-	174	-	-	-
HCM Lane V/C Ratio	0.43	-	0.194	-	-	-
HCM Control Delay (s)	68.235	-	30.6	-	-	-
HCM Lane LOS	F		D			
HCM 95th %tile Q(veh)	1.794	-	0.693	-	-	-

Notes

~ : Volume Exceeds Capacity; $: Delay Exceeds 300 Seconds; Error : Computation Not Defined

Intersection	
Intersection Delay, s/veh	5.4

Movement	EBL	EBT	EBR	WBL	WBT	WBR	NBL	NBT	NBR	SBL	SBT	SBR
Vol, veh/h	1	0	4	13	0	114	20	2755	32	33	1953	9
Conflicting Peds, #/hr	0	0	0	0	0	0	0	0	0	0	0	0
Sign Control	Stop	Stop	Stop	Stop	Stop	Stop	Free	Free	Free	Free	Free	Free
RT Channelized	-	-	None	-	-	None	-	-	None	-	-	None
Storage Length	-	-	-	-	-	0	130	-	-	125	-	-
Veh in Median Storage, #	-	0	-	-	0	-	-	0	-	-	0	-
Grade, %	-	0	-	-	0	-	-	0	-	-	0	-
Peak Hour Factor	92	92	92	92	92	92	92	92	92	92	92	92
Heavy Vehicles, %	2	2	2	2	2	2	2	2	2	2	2	2
Mvmt Flow	1	0	4	14	0	124	22	2995	35	36	2123	10

Major/Minor	Minor2			Minor1			Major1			Major2		
Conflicting Flow All	3440	5272	1066	3976	5259	1515	2133	0	0	3029	0	0
Stage 1	2199	2199	-	3055	3055	-	-	-	-	-	-	-
Stage 2	1241	3073	-	921	2204	-	-	-	-	-	-	-
Follow-up Headway	3.82	4.02	3.92	3.82	4.02	3.92	3.12	-	-	3.12	-	-
Pot Capacity-1 Maneuver	8	0	187	# 3	0	# 93	107	-	-	37	-	-
Stage 1	28	82	-	# 6	29	-	-	-	-	-	-	-
Stage 2	166	28	-	263	81	-	-	-	-	-	-	-
Time blocked-Platoon, %								-	-		-	-
Mov Capacity-1 Maneuver	-	0	187	# 0	0	# 93	107	-	-	37	-	-
Mov Capacity-2 Maneuver	-	0	-	# 0	0	-	-	-	-	-	-	-
Stage 1	22	2	-	# 5	23	-	-	-	-	-	-	-
Stage 2	-	22	-	# 7	2	-	-	-	-	-	-	-

Approach	EB	WB	NB	SB
HCM Control Delay, s	+	123	0.3	5
HCM LOS	-	F		

Minor Lane / Major Mvmt	NBL	NBT	NBR	EBLn1	WBLn1	WBLn2	SBL	SBT	SBR
Capacity (veh/h)	107	-	-	+	93	93	37	-	-
HCM Lane V/C Ratio	0.203	-	-	+	0.596	0.888	0.969	-	-
HCM Control Delay (s)	47.027	-	-	+	89.4	145.5	$ 301.562	-	-
HCM Lane LOS	E			+	F	F	F		
HCM 95th %tile Q(veh)	0.717	-	-	+	2.781	4.954	3.598	-	-

Notes

~ : Volume Exceeds Capacity; $: Delay Exceeds 300 Seconds; Error : Computation Not Defined

Intersection	
Intersection Delay, s/veh	1.2

Movement	EBL	EBT	WBT	WBR	SBL	SBR
Vol, veh/h	2	29	50	22	13	1
Conflicting Peds, #/hr	0	0	0	0	0	0
Sign Control	Free	Free	Free	Free	Stop	Stop
RT Channelized	-	None	-	None	-	None
Storage Length	-	-	-	-	0	-
Veh in Median Storage, #	-	0	0	-	0	-
Grade, %	-	0	0	-	0	-
Peak Hour Factor	92	92	92	92	92	92
Heavy Vehicles, %	2	2	2	2	2	2
Mvmt Flow	2	32	54	24	14	1

Major/Minor	Major1		Major2		Minor2	
Conflicting Flow All	78	0	-	0	102	66
Stage 1	-	-	-	-	66	-
Stage 2	-	-	-	-	36	-
Follow-up Headway	2.218	-	-	-	3.518	3.318
Pot Capacity-1 Maneuver	1520	-	-	-	896	998
Stage 1	-	-	-	-	957	-
Stage 2	-	-	-	-	986	-
Time blocked-Platoon, %		-	-	-		
Mov Capacity-1 Maneuver	1520	-	-	-	895	998
Mov Capacity-2 Maneuver	-	-	-	-	895	-
Stage 1	-	-	-	-	957	-
Stage 2	-	-	-	-	985	-

Approach	EB	WB	SB
HCM Control Delay, s	0.5	0	9.1
HCM LOS			A

Minor Lane / Major Mvmt	EBL	EBT	WBT	WBR	SBLn1
Capacity (veh/h)	1520	-	-	-	902
HCM Lane V/C Ratio	0.001	-	-	-	0.017
HCM Control Delay (s)	7.372	0	-	-	9.1
HCM Lane LOS	A	A			A
HCM 95th %tile Q(veh)	0.004	-	-	-	0.051

Notes

~ : Volume Exceeds Capacity; $: Delay Exceeds 300 Seconds; Error : Computation Not Defined

Intersection	
Intersection Delay, s/veh	2.5

Movement	EBL	EBT	WBT	WBR	SBL	SBR
Vol, veh/h	5	13	19	32	19	3
Conflicting Peds, #/hr	0	0	0	0	0	0
Sign Control	Free	Free	Free	Free	Stop	Stop
RT Channelized	-	None	-	None	-	None
Storage Length	-	-	-	-	0	-
Veh in Median Storage, #	-	0	0	-	0	-
Grade, %	-	0	0	-	0	-
Peak Hour Factor	92	92	92	92	92	92
Heavy Vehicles, %	2	2	2	2	2	2
Mvmt Flow	5	14	21	35	21	3

Major/Minor	Major1		Major2		Minor2	
Conflicting Flow All	55	0	-	0	63	38
Stage 1	-	-	-	-	38	-
Stage 2	-	-	-	-	25	-
Follow-up Headway	2.218	-	-	-	3.518	3.318
Pot Capacity-1 Maneuver	1550	-	-	-	943	1034
Stage 1	-	-	-	-	984	-
Stage 2	-	-	-	-	998	-
Time blocked-Platoon, %		-	-	-		
Mov Capacity-1 Maneuver	1550	-	-	-	940	1034
Mov Capacity-2 Maneuver	-	-	-	-	940	-
Stage 1	-	-	-	-	984	-
Stage 2	-	-	-	-	995	-

Approach	EB	WB	SB
HCM Control Delay, s	2	0	8.9
HCM LOS			A

Minor Lane / Major Mvmt	EBL	EBT	WBT	WBR	SBLn1
Capacity (veh/h)	1550	-	-	-	952
HCM Lane V/C Ratio	0.004	-	-	-	0.025
HCM Control Delay (s)	7.331	0	-	-	8.9
HCM Lane LOS	A	A			A
HCM 95th %tile Q(veh)	0.011	-	-	-	0.077

Notes

~ : Volume Exceeds Capacity; $: Delay Exceeds 300 Seconds; Error : Computation Not Defined

Intersection	
Intersection Delay, s/veh	3.2

Movement	EBL	EBT	WBT	WBR	SBL	SBR
Vol, veh/h	5	7	4	17	10	3
Conflicting Peds, #/hr	0	0	0	0	0	0
Sign Control	Free	Free	Free	Free	Stop	Stop
RT Channelized	-	None	-	None	-	None
Storage Length	-	-	-	-	0	-
Veh in Median Storage, #	-	0	0	-	0	-
Grade, %	-	0	0	-	0	-
Peak Hour Factor	92	92	92	92	92	92
Heavy Vehicles, %	2	2	2	2	2	2
Mvmt Flow	5	8	4	18	11	3

Major/Minor	Major1		Major2		Minor2	
Conflicting Flow All	23	0	-	0	32	14
Stage 1	-	-	-	-	14	-
Stage 2	-	-	-	-	18	-
Follow-up Headway	2.218	-	-	-	3.518	3.318
Pot Capacity-1 Maneuver	1592	-	-	-	982	1066
Stage 1	-	-	-	-	1009	-
Stage 2	-	-	-	-	1005	-
Time blocked-Platoon, %		-	-	-		
Mov Capacity-1 Maneuver	1592	-	-	-	979	1066
Mov Capacity-2 Maneuver	-	-	-	-	979	-
Stage 1	-	-	-	-	1009	-
Stage 2	-	-	-	-	1002	-

Approach	EB	WB	SB
HCM Control Delay, s	3	0	8.7
HCM LOS			A

Minor Lane / Major Mvmt	EBL	EBT	WBT	WBR	SBLn1
Capacity (veh/h)	1592	-	-	-	998
HCM Lane V/C Ratio	0.003	-	-	-	0.014
HCM Control Delay (s)	7.269	0	-	-	8.7
HCM Lane LOS	A	A			A
HCM 95th %tile Q(veh)	0.01	-	-	-	0.043

Notes

~ : Volume Exceeds Capacity; $: Delay Exceeds 300 Seconds; Error : Computation Not Defined

Two Way Analysis cannot be performed on an All Way Stop Intersection.

Intersection	
Intersection Delay, s/veh	6.7

Movement	EBL	EBT	EBR	WBL	WBT	WBR	NBL	NBT	NBR	SBL	SBT	SBR
Vol, veh/h	32	1800	40	128	1583	7	0	0	78	0	0	19
Conflicting Peds, #/hr	0	0	0	0	0	0	0	0	0	0	0	0
Sign Control	Free	Free	Free	Free	Free	Free	Stop	Stop	Stop	Stop	Stop	Stop
RT Channelized	-	-	None	-	-	None	-	-	None	-	-	None
Storage Length	160	-	160	175	-	-	-	-	0	-	-	0
Veh in Median Storage, #	-	0	-	-	0	-	-	0	-	-	0	-
Grade, %	-	0	-	-	0	-	-	0	-	-	0	-
Peak Hour Factor	92	92	92	92	92	92	92	92	92	92	92	92
Heavy Vehicles, %	2	2	2	2	2	2	2	2	2	2	2	2
Mvmt Flow	35	1957	43	139	1721	8	0	0	85	0	0	21

Major/Minor	Major1			Major2			Minor1			Minor2		
Conflicting Flow All	1728	0	0	1957	0	0	2993	4033	978	2855	4029	864
Stage 1	-	-	-	-	-	-	2026	2026	-	2003	2003	-
Stage 2	-	-	-	-	-	-	967	2007	-	852	2026	-
Follow-up Headway	3.12	-	-	3.12	-	-	3.82	4.02	3.92	3.82	4.02	3.92
Pot Capacity-1 Maneuver	172	-	-	# 131	-	-	15	3	215	18	3	255
Stage 1	-	-	-	-	-	-	37	100	-	38	103	-
Stage 2	-	-	-	-	-	-	247	102	-	290	100	-
Time blocked-Platoon, %		-	-		-	-						
Mov Capacity-1 Maneuver	172	-	-	# 131	-	-	12	2	215	9	2	255
Mov Capacity-2 Maneuver	-	-	-	-	-	-	12	2	-	9	2	-
Stage 1	-	-	-	-	-	-	29	80	-	30	103	-
Stage 2	-	-	-	-	-	-	227	102	-	140	80	-

Approach	EB	WB	NB	SB
HCM Control Delay, s	0.5	12.1	32.2	20.4
HCM LOS			D	C

Minor Lane / Major Mvmt	NBLn1	EBL	EBT	EBR	WBL	WBT	WBR	SBLn1
Capacity (veh/h)	215	172	-	-	# 131	-	-	255
HCM Lane V/C Ratio	0.394	0.202	-	-	1.062	-	-	0.081
HCM Control Delay (s)	32.2	31.16	-	-	161.896	-	-	20.4
HCM Lane LOS	D	D			F			C
HCM 95th %tile Q(veh)	1.762	0.729	-	-	7.749	-	-	0.262

Notes

~ : Volume Exceeds Capacity; $: Delay Exceeds 300 Seconds; Error : Computation Not Defined

Intersection	
Intersection Delay, s/veh	10.8
Intersection LOS	B

Movement	EBL	EBT	EBR	WBL	WBT	WBR	NBL	NBT	NBR	SBL	SBT	SBR
Vol, veh/h	9	20	3	53	23	200	2	124	85	106	124	12
Peak Hour Factor	0.92	0.92	0.92	0.92	0.92	0.92	0.92	0.92	0.92	0.92	0.92	0.92
Heavy Vehicles, %	2	2	2	2	2	2	2	2	2	2	2	2
Mvmt Flow	10	22	3	58	25	217	2	135	92	115	135	13
Number of Lanes	0	1	0	0	1	0	0	1	0	0	1	0

Approach	EB	WB	NB	SB
Opposing Approach	WB	EB	SB	NB
Opposing Lanes	1	1	1	1
Conflicting Approach Left	SB	NB	EB	WB
Conflicting Lanes Left	1	1	1	1
Conflicting Approach Right	NB	SB	WB	EB
Conflicting Lanes Right	1	1	1	1
HCM Control Delay	9	11	10.2	11.2
HCM LOS	A	B	B	B

Lane	NBLn1	EBLn1	WBLn1	SBLn1
Vol Left, %	1%	28%	19%	44%
Vol Thru, %	59%	62%	8%	51%
Vol Right, %	40%	9%	72%	5%
Sign Control	Stop	Stop	Stop	Stop
Traffic Vol by Lane	211	32	276	242
LT Vol	124	20	23	124
Through Vol	85	3	200	12
RT Vol	2	9	53	106
Lane Flow Rate	229	35	300	263
Geometry Grp	1	1	1	1
Degree of Util (X)	0.309	0.055	0.397	0.372
Departure Headway (Hd)	4.954	5.682	4.768	5.09
Convergence, Y/N	Yes	Yes	Yes	Yes
Cap	729	634	747	697
Service Time	2.954	3.682	2.857	3.188
HCM Lane V/C Ratio	0.314	0.055	0.402	0.377
HCM Control Delay	10.2	9	11	11.2
HCM Lane LOS	B	A	B	B
HCM 95th-tile Q	1.3	0.2	1.9	1.7

Notes

~ : Volume Exceeds Capacity; $: Delay Exceeds 300 Seconds; Error : Computation Not Defined